OPERATING AND SERVICE MANUAL

8673A SYNTHESIZED SIGNAL GENERATOR

2.0 — 26.0 GHz (Including Options 001, 002, 003, 004, and 005)

SERIAL NUMBERS

This manual applies directly to instruments with serial numbers prefixed 2228A.

For additional important information about serial numbers, see INSTRUMENTS COVERED BY MANUAL in Section I.

THIS MANUAL COVERS A SPECIAL MODIFICATION OF THE INSTRUMENT. SEE INSIDE COVER

HEWLETT PACKARD

© Copyright HEWLETT-PACKARD COMPANY 1982
1501 PAGE MILL ROAD, PALO ALTO, CALIFORNIA, U.S.A.

MANUAL PART NUMBER. 08673-90003

Printed: JULY 1982

CERTIFICATION

Hewlett-Packard Company certifies that this product met its published specifications at the time of shipment from the factory. Hewlett-Packard further certifies that its calibration measurements are traceable to the United States National Bureau of Standards, to the extent allowed by the Bureau's calibration facility, and to the calibration facilities of other International Standards Organization members.

WARRANTY

This Hewlett-Packard instrument product is warranted against defects in material and workmanship for a period of one year from date of shipment. During the warranty period, Hewlett-Packard Company will, at its option, either repair or replace products which prove to be defective.

For warranty service or repair, this product must be returned to a service facility designated by HP. Buyer shall prepay shipping charges to HP and HP shall pay shipping charges to return the product to Buyer. However, Buyer shall pay all shipping charges, duties, and taxes for products returned to HP from another country.

HP warrants that its software and firmware designated by HP for use with an instrument will execute its programming instructions when properly installed on that instrument. HP does not warrant that the operation of the instrument, or software, or firmware will be uninterrupted or error free.

LIMITATION OF WARRANTY

The foregoing warranty shall not apply to defects resulting from improper or inadequate maintenance by Buyer, Buyer-supplied software or interfacing, unauthorized modification or misuse, operation outside of the environmental specifications for the product, or improper site preparation or maintenance.

NO OTHER WARRANTY IS EXPRESSED OR IMPLIED. HP SPECIFICALLY DISCLAIMS THE IMPLIED WARRANTIES OF MERCHANTABILITY AND FITNESS FOR A PARTICULAR PURPOSE.

EXCLUSIVE REMEDIES

THE REMEDIES PROVIDED HEREIN ARE BUYER'S SOLE AND EXCLUSIVE REMEDIES. HP SHALL NOT BE LIABLE FOR ANY DIRECT, INDIRECT, SPECIAL, INCIDENTAL, OR CONSEQUENTIAL DAMAGES, WHETHER BASED ON CONTRACT, TORT, OR ANY OTHER LEGAL THEORY.

ASSISTANCE

Product maintenance agreements and other customer assistance agreements are available for Hewlett-Packard products.

For any assistance, contact your nearest Hewlett-Packard Sales and Service Office. Addresses are provided at the back of this manual.

IMPORTANT

PLEASE NOTE THAT WE CANNOT SEND YOU YOUR FINAL MANUAL UNLESS YOU SEND US THIS CARD.

8673A

SYNTHESIZED SIGNAL GENERATOR
2.0 — 26.0 GHz

This Preliminary Manual is supplied to permit earliest possible delivery of your instrument. The information is as complete as possible at this time.

This request card entitles you to one copy of the final Operating and Service Manual for this instrument. To receive your copy of the final manual when it is available, fill out, detach and return the card (no postage necessary when mailed in the United States).

Type or print your full name and address in the spaces provided. Be sure to enter the full serial number of the instrument, and mail this card within six months of the date you received your instrument.

PLEASE GIVE US YOUR COMPLETE ADDRESS. PARTIAL ADDRESSES CAUSE DELAYS AND MAY EVEN MAKE IT IMPOSSIBLE FOR US TO FILL YOUR REQUEST.

MANUAL CHANGES

MANUAL IDENTIFICATION

Model Number: 8673A
Date Printed: June 1983
Part Number: 08673-90003

8673A SYNTHESIZED
SIGNAL GENERATOR

This supplement contains important information for correcting manual errors and for adapting the manual to instruments containing improvements made after the printing of the manual.

To use this supplement:

Make all ERRATA corrections

Make all appropriate serial number related changes indicated in the tables below.

Serial Prefix or Number	Make Manual Changes
2241A	1
2243A	1, 2
2313A	1, 2, 3
► 2326A	1, 2, 3, 4
► 2327A	1, 2, 3, 4, 5

Serial Prefix or Number	Make Manual Changes

► NEW ITEM

ERRATA

► Page 1-1, Paragraph 1-1 between 3rd and 4th paragraphs:
Add "The 8673A 10 MHz Reference Oscillator A3A8, is a field repairable component. A separate operating and service manual, HP Part Number 10811-90002, is provided for this assembly and should be retained with the 8673A manual".

► Page 1-12, Table 1-3:
To Controller, HP-IB, Recommended Model Column, add "/00085-15001" to statement starting with "00085-15002/00085-15004."

► Page 5-1, Paragraph 5-3:
To the third paragraph add: "Mass Storage ROM (00085-15001)".

► Page 5-39, Paragraph 5-22:
To EQUIPMENT, HP-IB Controller, add /00085-15001.

► Page 5-42, Paragraph 5-23:
To EQUIPMENT, HP-IB Controller, add /00085-15001.

► Page 5-46, Paragraph 5-25:
To EQUIPMENT, HP-IB Controller, add /00085-15001.

NOTE

Manual change supplements are revised as often as necessary to keep manuals as current and accurate as possible. Hewlett-Packard recommends that you periodically request the latest edition of this supplement. Free copies are available from all HP offices. When requesting copies quote the manual identification information from your supplement, or the model number and print date from the title page of the manual.

18 July 1983
12 Pages

HEWLETT PACKARD

Printed in U.S.A.

ERRATA (cont'd)

► Page 5-52, Paragraph 5-28:
To EQUIPMENT, HP-IB Controller, add /82903A/00085-15005/00085-15002/00085-15004/00085-15001.

Page 5-57/5-58, Paragraph 5-28:
Following paragraph 5-28 add the procedure information, on page 3, for paragraph 5-29 "5-29 PULSE AMPLITUDE CONTROL ADJUSTMENT."

Page 6-63, Table 6-3:
Delete A4R1 and A4R2.

5-29 PULSE AMPLITUDE CONTROL ADJUSTMENT

Reference Service Sheet 6-A1

Description **Automated adjustment.** The amplitude of the YTM Bias pulse affects rise time, overshoot, and general pulse shape of the pulse modulated microwave carrier. This amplitude is controlled by the pulse amplitude control (PAC) voltage. To maintain good pulse shape over the Signal Generators full frequency and output level range, the PAC voltage must be adjusted properly. The required PAC voltage will vary with both frequency and output level setting of the Signal Generator. The level of the PAC voltage in each harmonic frequency band is controlled by a slope and offset adjustment. The label for each adjustment is as follows;

Frequency:	Band 2	Band 3	Band 4
Adjustment:	B2 OF	B3 OF	B4 OF
	B2 SL	B3 SL	B4 SL

Pulse Program Menu

The PAC voltage adjustment is computer assisted and runs on an HP 85F controller. To run the program, load the "Autost" file on the Test Cassette, HP Part No. 11726-10001. Press run when loaded. After the EXEC Program Main Menu is displayed, press the special function key K4, PULSE. This will load and run the Pulse adjustment routine. The following Pulse Program Menu will then be displayed.

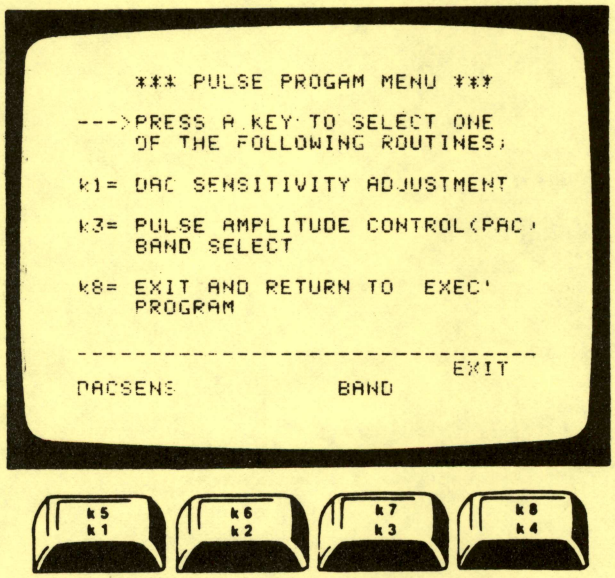

Pulse Program Menu

The user then selects k3, BAND (k1, DACSENS is not used during the PAC adjustment. It is used during the Bias-2 DAC Sensitivity Adjustment procedure). After k3 is pressed a new menu will be displayed on the following page.

PULSE AMPLITUDE CONTROL ADJUSTMENT (cont'd)

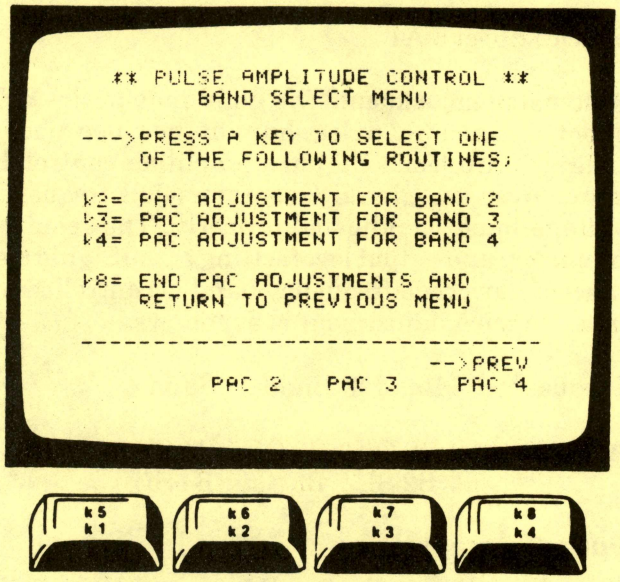

Pulse Amplitude Control Band Select Menu

The user can then select Bands 2, 3 or 4 PAC adjustment. The adjustment procedure for each band is identical, therefore the following discussion for Band 2 applies to all bands.

PULSE AMPLITUDE CONTROL ADJUSTMENT (cont'd)

Band 2 Adjustment

The user then selects k2,PAC 2, for the Band 2 adjustment. Keys k3 and k4 are selected for Band 3 and Band 4 PAC adjustments, respectively. The following PAC Adjustment Menu will then be displayed.

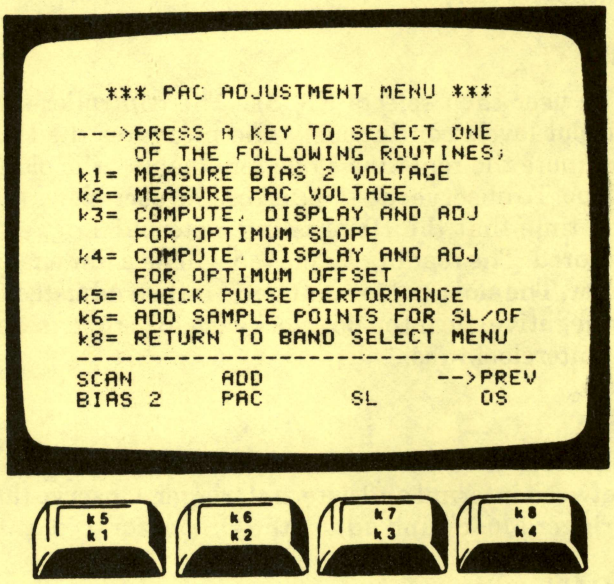

PAC Adjustment Menu

BIAS 2

The user then selects k1, BIAS 2. This routine will first set the Signal Generator to the highest frequency in the band (example 12.3 GHz for Band 2). Next it will measure and store the YTM Bias 2 voltage at two different output level vernier settings, −10 dBm and +8dBm. These two Bias 2 voltage levels will be used later to calculate and plot the optimum settings for the PAC voltage slope and offset adjustments.

PAC

The user then selects k2, PAC. The controller will then set the Signal Generator to the PULSE NORM mode and the user will view the detected pulse modulated signal on the oscilloscope. The user then adjusts the PAC voltage using either B2 OF or B2 SL pots to obtain the optimum pulse shape. The pulse shape should be as flat as possible with minimum overshoot and rise time. The user can observe the PAC voltage change on the DVM while adjusting OF or SL pots.

The PAC voltage is adjusted initially at one frequency for two power level settings (for example, 12.3 GHz at −10 dBm and +8 dBm). The optimum PAC voltage found by the user for these two points is then measured and stored by the controller when the 'CONT' key is pressed.

PULSE AMPLITUDE CONTROL ADJUSTMENT (cont'd)

The controller then uses these two PAC voltages to compute the optimum slope and offset settings for all frequency and output levels. The user will then be guided to these desired settings in the SL, k3 and OS, k4 routines. This will result in the most optimum PAC voltages providing the best possible pulse shape, at all instrument frequency and output levels.

SL

The user then selects K3, SL. The controller switches the instrument between two output levels continuously and measures the PAC voltage at each level. It will then compute the real-time slope and display the slope error from the optimum computed slope. To observe the slope error, the user views the DVM and notes the reading during the time that the DVM is in "External Trigger Mode". All other readings must be ignored. The reading displayed will be a dimensionless number representing the slope error. The slope pot for that band is then adjusted for 0.00±.005 on the DVM. If the error is negative, turn the pot clockwise to compensate. If the error is positive, turn the pot counterclockwise.

OS

The user then selects K4, OS. Again the DVM will continuously cycle and switch between internal and external trigger. Observe the reading during the DVM "External Trigger Mode" and adjust the OS pot for 0.00 ±.001 .

SCAN

The user must now check the adjustment at several frequencies and power levels. To do this the user can select k5, SCAN. When K5, SCAN, is selected the Pulse Scan Menu will be displayed.

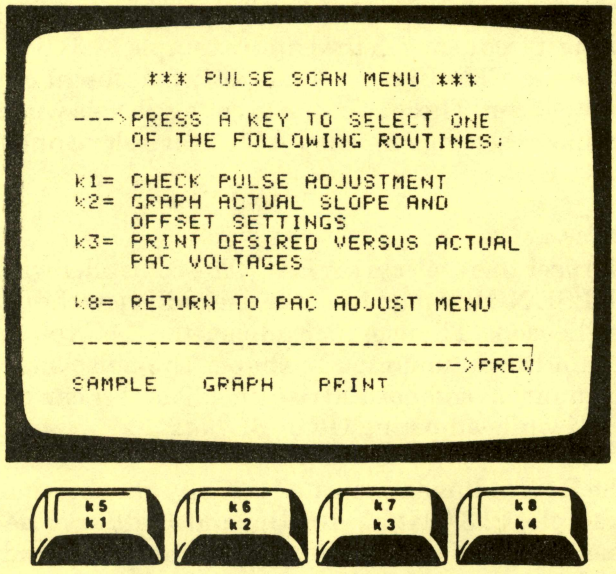

Pulse Scan Menu

PULSE AMPLITUDE CONTROL ADJUSTMENT (cont'd)

SAMPLE

The user should select k1, SAMPLE, at this time. Sample is used to check selected frequency points. The controller will set the Signal Generator to various frequencies and power levels as the user checks for excessive overshoot and rise times.

GRAPH and PRINT Routines

Graph, k2 and Print, k3 can optionally be selected by the user to print actual data results of the adjustment. GRAPH prints a graph of Vbias2 versus Vpac. PRINT is used to print the desired versus actual PAC voltages. Examples of both printouts are shown below.

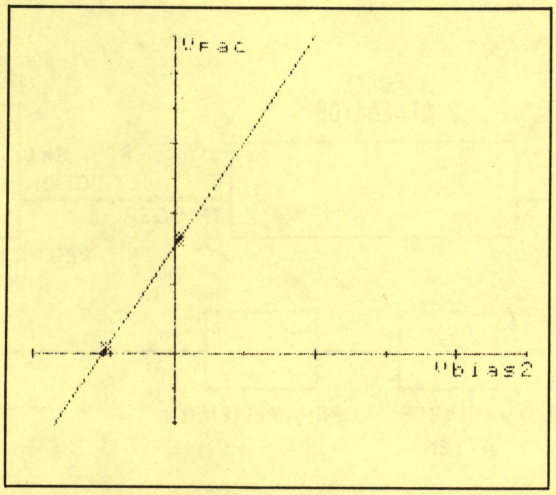

Graph Routine

```
OPTIMUM VALUES

Freq     Level   M   Vbias2    Vpac
------   -----   -   ------    -----
12.300    -10    1    - 488    + 059
12.300      8    1    + 046   +1 651

Slope = 2 986 V/V
Offset = 1 514 V


ACTUAL VALUES:

Freq     Level   M   Vbias2    Vpac
------   -----   -   ------    -----
12 300    -10    1    - 488    + 069
12.300      8    1    + 046   +1 650

Slope = 2 966 V/V
Offset = 1 515 V
```

Print Routine

Once the user is satisfied with the adjustment of the sampled points, it is then necessary to return the Signal Generator to local operation by pressing the LOCAL key and check all frequencies and power levels in Band 2. High confidence in performance can be gained by checking the recommended points in Section 4-18 of the Test Record Summary, Table 4-2. If points are found out of specification press k8, PREV and refer to ADD function, k6 below. If all points in Band 2 are within specification then press k8, PREV twice to return to the PAC Band Select Menu.

Note

Care should be taken when checking performance to the instrument specification with this test setup. High overshoot and ripples can be caused by SWR reflections in the test system. If this occurs, add additional attenuator pads to the output of the detector before the amplifier. This may alleviate problems.

ADD FUNCTION

The add function is selected if the user finds one or several frequencies or power levels that are out of specification while checking overall instrument pulse performance. By

PULSE AMPLITUDE CONTROL ADJUSTMENTS (cont'd)

ADD FUNCTION (cont'd)

selecting k6, ADD, compromises in the optimum slope and offset adjustment settings can be made. The user will first enter the frequencies where out of spec performance was found. Bias 2 and PAC voltage data will then be entered for the new sampled points. The controller will then recompute the optimum slope and offset, taking into consideration all sampled data points. The PAC Adjustment Menu will then be displayed. The user then readjusts the recommended points using SL and OS key functions.The SCAN function is then used again to observe the performance of all sampled points. This iterative procedure is continued until all frequency and output level points are within specified performance. Normally this will be achieved in one iteration of the procedure.

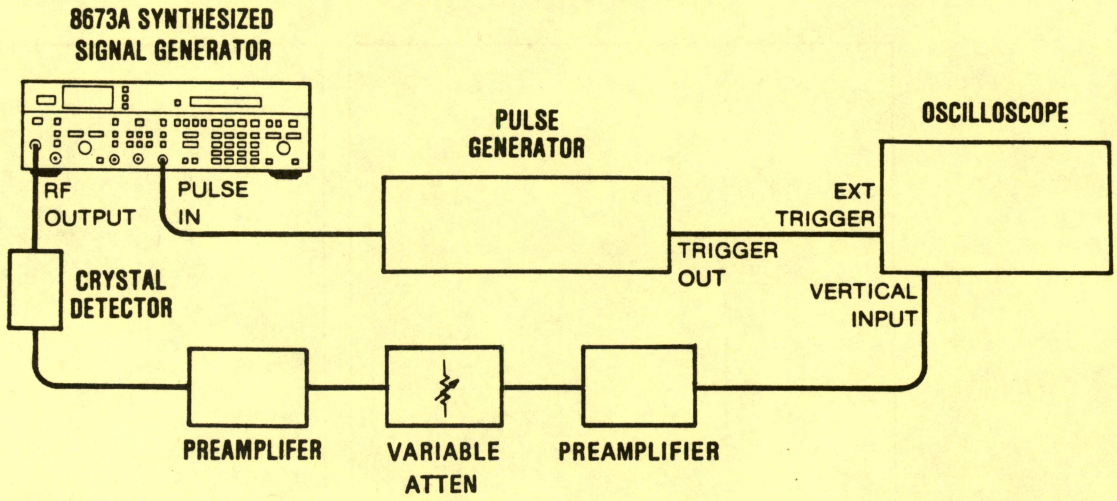

Figure 5-34. Pulse Amplitude Control Adjustment Test Setup

Equipment

Oscilloscope	HP 1715A
Pulse Generator	HP 8013B
Preamplifier	HP 8447F
Crystal Detector	HP 08673-60083
HP-IB Controller	HP 85F/82903A/00085-15005/ 00085-15002/00085-15004/ 00085-15001
Test Cassette	HP 11726-10001
Attenuator, Step	HP 355D

Procedure

1. Set the Signal Generator's HP-IB address to 19.
2. Connect the equipment as shown in Figure 5-34.
3. Load the test program as instructed in the paragraph titled "Automated Adjustment Procedures" in this section.
4. After the program is loaded and the EXEC Program Main Menu is displayed, press K4 to run the Pulse Adjustment.

ERRATA (cont'd)

►Page 6-2, Table 6-1:
Earlier versions of the manual incorrectly listed A3A9A3 YTO Assembly as an exchange assembly 5086-6366. Delete references to this number. The only valid, correct number is 5086-7366.

►Page 6-8, Table 6-3:
Change A1A2CR1 to A1A2CR2. Change A1A2CR2 to A1A2CR1.

►Page 6-22, Table 6-3:
Change A1A12J10 to 1251-5649, CD7.

►Page 6-23, Table 6-3:
Change A1W1 to 08673-20055, CD2, QTY 1, CABLE SEMI-RIGID, RF OUTPUT STD. INST. FRONT PANEL, ATTEN.-TO-FRONT PANEL, Mfr Code 28480, Mfr Part Number 08673-20055.

Add A1W1, 08673-20095, CD0, QTY1, CABLE SEMI-RIGID, RF OUTPUT, OPT 001 DIRECTIONAL COUPLER-TO-FRONT PANEL. Mfr Code 28480, Mfr Part Number 08673-20095.

Add A1W1, 08673-20088, CD1, QTY1, CABLE SEMI-RIGID, RF OUTPUT, OPT. 004 ATTEN.-TO-REAR PANEL. Mfr Code 28480, Mfr Part Number 08673-20088.

Add A1W1, 08673-20090, CD5, QTY 1, CABLE SEMI-RIGID, RF OUTPUT, OPT. 005 DIRECTIONAL COUPLER-TO-REAR PANEL. Mfr Code 28480, Mfr Part Number 08673-20090.

►Page 6-34, Table 6-3:
Change A2A13J5 to 1251-5649, CD7, Mfr Part Number 1251-5649.

►Page 6-54, Table 6-3:
To A3A8 information, add: 10811-90002, CD9, Qty 1, OPERATING AND SERVICE MANUAL for A3A8, Mfr Code 28480, Mfr Part Number 10811-90002.

►Page 6-55, Table 6-3:
To the A3A9A3 YTO Assembly description add; "early versions of the manual incorrectly listed a restored assembly, 5086-6366".

Service Sheet 1-A1, A1A2A1 ALC Board Assembly:
Change the −10V at R26, R63, R64 and R65 to −5V.
Add a line between U2 pin 13 and VR1/R75 junction; label this line −5V.

►Service Sheet 4, A1 RF Output Assembly Troubleshooting Block Diagram:
Locate the ATTENUATOR DRIVER BOARD ASSEMBLY drawing on the right side of the service sheet. Change W6 to read A1W1.

►Service Sheet 3-A1, Figure 8-13:
At the top center of the schematic, locate P/O A1W4 and change it to read P/0 A1W6. At the right of the schematic, locate P/O A1W4(BIAS 1) and change it to read P/O A1W6(BIAS 1).

►Service Sheet 3-A1, Figure 8-13:
Locate P/O A1A9 PRE-AMP BIAS Schematic and change the HP Part Number from 08673-60026 to 08673-67001.

Service Sheet 5-A1, A1A1 Attenuator Driver Board Assembly:
On the right side of the schematic, change RF OUTPUT from J1 to A4J1.

ERRATA (cont'd)

► Service Sheet 1-A3, Figure 8-49:
At the top left of schematic, locate A3A8 portion of the schematic and add a note that reads ...."Field Repairable Component. Refer to oscillator Operating And Service Manual."

► Service Sheet 10-A3, A3A7, A3A9A3 YTO/FM Coil Driver Assembly:
Delete 5086-6366 from A3A9A3 2.0-6.5 GHz YTO Assembly located on the right side of the schematic.

CHANGE 1

Page 6-25, Table 6-3:
Add A2A2C6, HP Part Number 0160-3878, CD6, Qty 1, CAPACITOR-FXD 100 pf ±10% 100 VDC CER, MFR CODE 28480, MRF PART NO. 0160-3878.

Service Sheet 4-A2, A2A2 Key-Code Assy:
Add C6, 1000 pF between U13 (14) and ground.

CHANGE 2

Page 6-61, Table 6-3:
Add A4A1C1, HP PART NUMBER 0180-3311, CD4, QTY 1, CAPACITOR FXD 6.8 μF ±10%, 20 VDC TA MFR. CODE 28480, MFR PART NO. 0180-3311.

Page 6-63, Table 6-3:
Add A4R1, HP PART NUMBER 0698-3430 , CD5, QTY 1, RESISTOR FXD 21.5Ω 1% MET FLM .125W, TC = ±100, MRF. CODE 28480, MFR PART NUMBER 0698-3430.

Service Sheet 1A4, A4 Front Panel Assembly:
Locate LINE switch on left side of schematic.
Add R1, 21.5Ω in series with center contact of switch and labeled 934.
Add C1, 6.8 μF between J3 pin 34 and pin 31.

CHANGE 3

Page 6-7, Table 6-3:
Change A1A2A1R59 and R61 to 2100-3274, Qty 2, RESISTOR-TRMR 10KΩ, Mfr. Part Number 2100-3274.
Change A1A2A1R62 to 0698-7272, CD1, Qty 1, RESISTOR 31.6K, Mfr. Part Number C3-1/8-T0-3162-F.
Change A1A2A1R63 to 0698-7270, CD9, RESISTOR 26.1K, Mfr. Part Number C3-1/8-T0-2612-F.
Change A1A2A1R64 to 0698-7267, Qty 1, RESISTOR 19.6K, Mfr. Part Number C3-1/8-T0-1962-F.
Change A1A2A1R65 to 0698-7265, Qty 1, RESISTOR 16.2K, Mfr. Part Number C3-1/8-T0-1622-F.

Service Sheet 1-A1, A1A2A1 ALC Board Assembly:
Change R59 and R61 to 10KΩ.
Change R62 to 31.6KΩ.
Change R63 to 26.1KΩ.
Change R64 to 19.6KΩ.
Change R65 to 16.2KΩ.

► CHANGE 4

Part Numbers for the displays in A4 Assembly were changed. This information is already documented in the manual and is listed for Serial Prefix identification only.

► CHANGE 5

Page 6-56, Table 6-3:
Change A3A9A5 to 86701-60089, CD5, Mfr Part Number 86701-60089.

Page 6-57, Table 6-3:
Delete A3A9A5C16.

Change A3A9A5C22 to A3A9A5C22* 0140-0196, CAPACITOR FXD 150 pF ±5%, 300 Vdc Mica, Mfr Part Number 0140-0196.

Change A3A9A5L10 to 9140-0539 CD7, Qty 1, INDUCTOR RF CH MLD 3.0 μH, ±5% .105 D X .26 LG, Mfr Part Number 9140-0539.

Change A3A9A5Q4 to 1855-0235 CD8, TRANSISTOR J-FET N-CHAN TO-52, Mfr Part Number 1855-0235.

Delete A3A9A5R12 and R14.

Change A3A9A5R15 and R17 to 0757-0242, RESISTOR 1.1K 1%, .125W F TC=0±100, Mfr Part Number C4-1/8-TO-1101-F.

Change A3A9A5R18 to 0757-0419 RESISTOR 681 OHMS 1%, .125W F TC=0±100, Mfr Part Number C4-1/8-TO-6810-F.

Page 6-58, Table 6-3:
Change A3A9R22 to 0698-7195, RESISTOR 19.6 OHMS 1%, .125W F TC=0±100, Mfr Part Number C4-1/8-TO-19R6-F.

Service Sheet 8-A3, Figure 8-62:
On Component Locator, delete R12, R14 and C16.

Service Sheet 8-A3, Figure 8-63:
Replace indicated portion of Figure 8-63 with partial schematic Figure 8-63 of this supplement.

Change A3A9A5 SAMPLER ASSEMBLY Schematic title (upper left of schematic) to 86701-60089.

Change REFERENCE DESIGNATIONS Table to include deleted A3A9A5R12, R14 and C16.

Change TRANSISTOR PART NUMBERS Table Q4 listing to read 1855-0235.

ERRATA (cont'd)

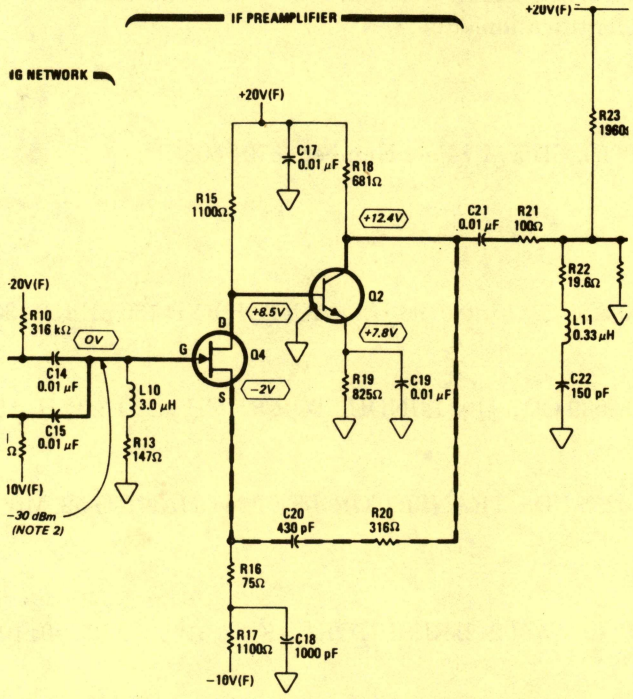

P/O Figure 8-63. YTO Sampler Assembly Schematic Diagram (P/O CHANGE 5)

MANUAL CHANGES

MANUAL IDENTIFICATION
Model Number: 8673A
Date Printed: June 1983
Part Number: 08673-90003

8673A SYNTHESIZED
SIGNAL GENERATOR

This supplement contains important information for correcting manual errors and for adapting the manual to instruments containing improvements made after the printing of the manual.

To use this supplement:

Make all ERRATA corrections

Make all appropriate serial number related changes indicated in the tables below.

Serial Prefix or Number	Make Manual Changes
2241A	1
2243A	1, 2
2313A	1, 2, 3
2326A	1, 2, 3, 4
► 2339A	1, 2, 3, 4, 5
► 2350A	1, 2, 3, 4, 5, 6

Serial Prefix or Number	Make Manual Changes

► NEW ITEM

ERRATA

► The 18 July 1983 version of the change sheet erroneously listed Serial Prefix 2327A.

Page 1-1, Paragraph 1-1 between 3rd and 4th paragraphs:
Add "The 8673A 10 MHz Reference Oscillator A3A8, is a field repairable component. A separate operating and service manual, HP Part Number 10811-90002, is provided for this assembly and should be retained with the 8673A manual".

Page 1-12, Table 1-3:
To Controller, HP-IB, Recommended Model Column, add "/00085-15001" to statement starting with "00085-15002/00085-15004."

Page 5-1, Paragraph 5-3:
To the third paragraph add: "Mass Storage ROM (00085-15001)".

► Page 5-4, Table 5-1:
For A3A1A2L4, change the range of values to "0.22 to 0.68 μH".

Page 5-39, Paragraph 5-22:
To EQUIPMENT, HP-IB Controller, add /00085-15001.

Page 5-42, Paragraph 5-23:
To EQUIPMENT, HP-IB Controller, add /00085-15001.

NOTE

Manual change supplements are revised as often as necessary to keep manuals as current and accurate as possible. Hewlett-Packard recommends that you periodically request the latest edition of this supplement. Free copies are available from all HP offices. When requesting copies quote the manual identification information from your supplement, or the model number and print date from the title page of the manual.

19 October 1983
12 Pages

HEWLETT PACKARD

Printed in U.S.A.

ERRATA (cont'd)

Page 5-46, Paragraph 5-25:
To EQUIPMENT, HP-IB Controller, add /00085-15001.

Page 5-52, Paragraph 5-28:
To EQUIPMENT, HP-IB Controller, add /82903A/00085-15005/00085-15002/00085-15004/00085-15001.

Page 5-57/5-58, Paragraph 5-28:
Following paragraph 5-28 add the procedure information, on page 2, for paragraph 5-29 "5-29 PULSE AMPLITUDE CONTROL ADJUSTMENT."

Continued . . . .

ADJUSTMENTS

5-29 PULSE AMPLITUDE CONTROL ADJUSTMENT

Reference Service Sheet 6-A1

Description **Automated adjustment.** The amplitude of the YTM Bias pulse affects rise time, overshoot, and general pulse shape of the pulse modulated microwave carrier. This amplitude is controlled by the pulse amplitude control (PAC) voltage. To maintain good pulse shape over the Signal Generators full frequency and output level range, the PAC voltage must be adjusted properly. The required PAC voltage will vary with both frequency and output level setting of the Signal Generator. The level of the PAC voltage in each harmonic frequency band is controlled by a slope and offset adjustment. The label for each adjustment is as follows;

Frequency:	Band 2	Band 3	Band 4
Adjustment:	B2 OF	B3 OF	B4 OF
	B2 SL	B3 SL	B4 SL

Pulse Program Menu

The PAC voltage adjustment is computer assisted and runs on an HP 85F controller. To run the program, load the "Autost" file on the Test Cassette, HP Part No. 11726-10001. Press run when loaded. After the EXEC Program Main Menu is displayed, press the special function key K4, PULSE. This will load and run the Pulse adjustment routine. The following Pulse Program Menu will then be displayed.

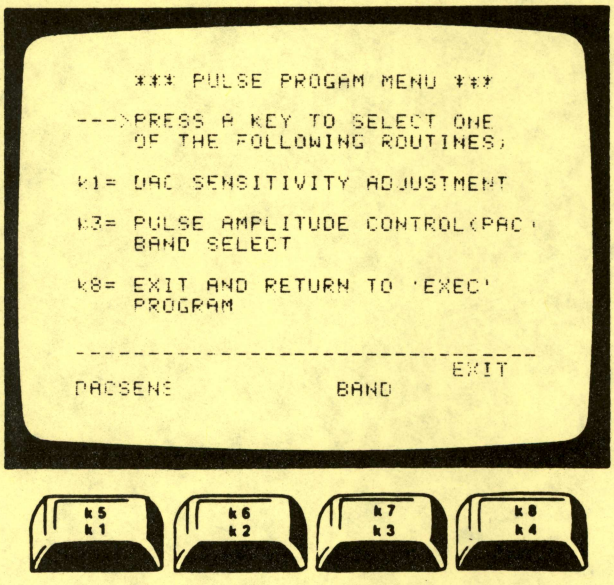

Pulse Program Menu

The user then selects k3, BAND (k1, DACSENS is not used during the PAC adjustment. It is used during the Bias-2 DAC Sensitivity Adjustment procedure). After k3 is pressed a new menu will be displayed on the following page.

PULSE AMPLITUDE CONTROL ADJUSTMENT (cont'd)

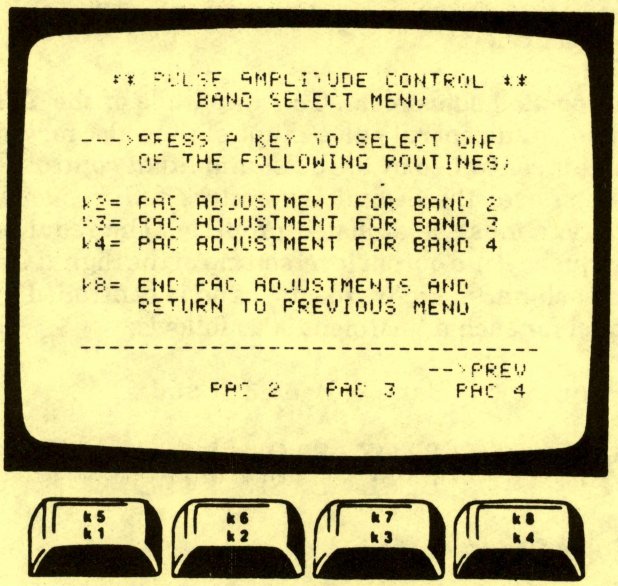

Pulse Amplitude Control Band Select Menu

The user can then select Bands 2, 3 or 4 PAC adjustment. The adjustment procedure for each band is identical, therefore the following discussion for Band 2 applies to all bands.

PULSE AMPLITUDE CONTROL ADJUSTMENT (cont'd)

Band 2 Adjustment

The user then selects k2,PAC 2, for the Band 2 adjustment. Keys k3 and k4 are selected for Band 3 and Band 4 PAC adjustments, respectively. The following PAC Adjustment Menu will then be displayed.

PAC Adjustment Menu

BIAS 2

The user then selects k1, BIAS 2. This routine will first set the Signal Generator to the highest frequency in the band (example 12.3 GHz for Band 2). Next it will measure and store the YTM Bias 2 voltage at two different output level vernier settings, −10 dBm and +8dBm. These two Bias 2 voltage levels will be used later to calculate and plot the optimum settings for the PAC voltage slope and offset adjustments.

PAC

The user then selects k2, PAC. The controller will then set the Signal Generator to the PULSE NORM mode and the user will view the detected pulse modulated signal on the oscilloscope. The user then adjusts the PAC voltage using either B2 OF or B2 SL pots to obtain the optimum pulse shape. The pulse shape should be as flat as possible with minimum overshoot and rise time. The user can observe the PAC voltage change on the DVM while adjusting OF or SL pots.

The PAC voltage is adjusted initially at one frequency for two power level settings (for example, 12.3 GHz at −10 dBm and +8 dBm). The optimum PAC voltage found by the user for these two points is then measured and stored by the controller when the 'CONT' key is pressed.

PULSE AMPLITUDE CONTROL ADJUSTMENT (cont'd)

The controller then uses these two PAC voltages to compute the optimum slope and offset settings for all frequency and output levels. The user will then be guided to these desired settings in the SL, k3 and OS, k4 routines. This will result in the most optimum PAC voltages providing the best possible pulse shape, at all instrument frequency and output levels.

SL

The user then selects K3, SL. The controller switches the instrument between two output levels continuously and measures the PAC voltage at each level. It will then compute the real-time slope and display the slope error from the optimum computed slope. To observe the slope error, the user views the DVM and notes the reading during the time that the DVM is in "External Trigger Mode". All other readings must be ignored. The reading displayed will be a dimensionless number representing the slope error. The slope pot for that band is then adjusted for 0.00±.005 on the DVM. If the error is negative, turn the pot clockwise to compensate. If the error is positive, turn the pot counterclockwise.

OS

The user then selects K4, OS. Again the DVM will continuously cycle and switch between internal and external trigger. Observe the reading during the DVM "External Trigger Mode" and adjust the OS pot for 0.00 ±.001 .

SCAN

The user must now check the adjustment at several frequencies and power levels. To do this the user can select k5, SCAN. When K5, SCAN, is selected the Pulse Scan Menu will be displayed.

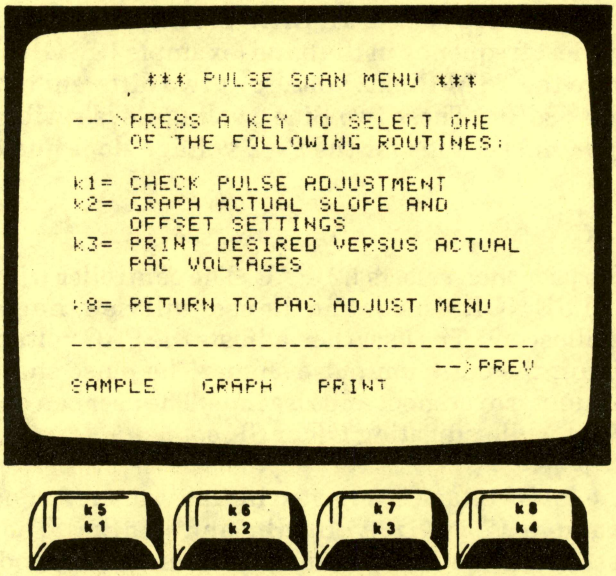

Pulse Scan Menu

ADJUSTMENTS

PULSE AMPLITUDE CONTROL ADJUSTMENT (cont'd)

SAMPLE

The user should select k1, SAMPLE, at this time. Sample is used to check selected frequency points. The controller will set the Signal Generator to various frequencies and power levels as the user checks for excessive overshoot and rise times.

GRAPH and PRINT Routines

Graph, k2 and Print, k3 can optionally be selected by the user to print actual data results of the adjustment. GRAPH prints a graph of Vbias2 versus Vpac. PRINT is used to print the desired versus actual PAC voltages. Examples of both printouts are shown below.

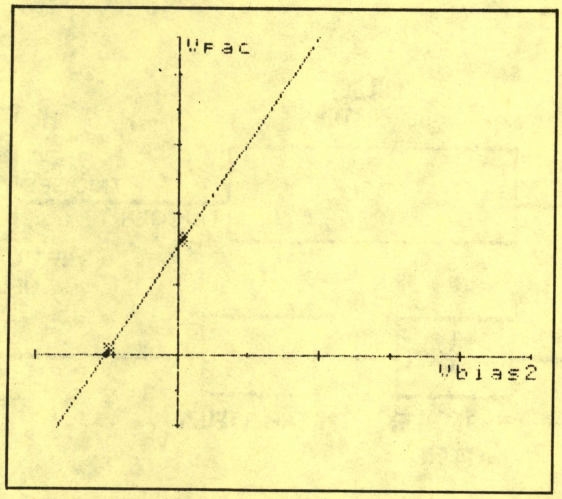

Graph Routine

```
OPTIMUM VALUES:

Freq     Level   M   Vbias2    Vpac
------   -----   -   ------    -----
12.300    -10    1    - 488    + 059
12.300     8     1    +.046   +1 651

Slope = 2.986 V/V
Offset = 1.514 V


ACTUAL VALUES:

Freq     Level   M   Vbias2    Vpac
------   -----   -   ------    -----
12.300    -10    1    -.488    + 069
12.300     8     1    +.046   +1 650

Slope = 2.966 V/V
Offset = 1.515 V
```

Print Routine

Once the user is satisfied with the adjustment of the sampled points, it is then necessary to return the Signal Generator to local operation by pressing the LOCAL key and check all frequencies and power levels in Band 2. High confidence in performance can be gained by checking the recommended points in Section 4-18 of the Test Record Summary, Table 4-2. If points are found out of specification press k8, PREV and refer to ADD function, k6 below. If all points in Band 2 are within specification then press k8, PREV twice to return to the PAC Band Select Menu.

Note

Care should be taken when checking performance to the instrument specification with this test setup. High overshoot and ripples can be caused by SWR reflections in the test system. If this occurs, add additional attenuator pads to the output of the detector before the amplifier. This may alleviate problems.

ADD FUNCTION

The add function is selected if the user finds one or several frequencies or power levels that are out of specification while checking overall instrument pulse performance. By

PULSE AMPLITUDE CONTROL ADJUSTMENTS (cont'd)

ADD FUNCTION (cont'd)

selecting k6, ADD, compromises in the optimum slope and offset adjustment settings can be made. The user will first enter the frequencies where out of spec performance was found. Bias 2 and PAC voltage data will then be entered for the new sampled points. The controller will then recompute the optimum slope and offset, taking into consideration all sampled data points. The PAC Adjustment Menu will then be displayed. The user then readjusts the recommended points using SL and OS key functions. The SCAN function is then used again to observe the performance of all sampled points. This iterative procedure is continued until all frequency and output level points are within specified performance. Normally this will be achieved in one iteration of the procedure.

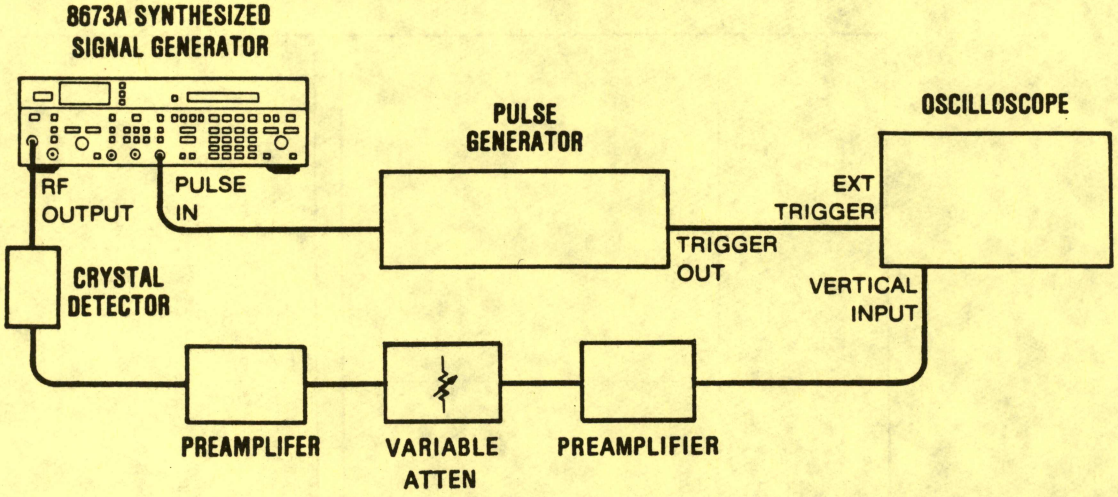

Figure 5-34. Pulse Amplitude Control Adjustment Test Setup

Equipment

Oscilloscope	HP 1715A
Pulse Generator	HP 8013B
Preamplifier	HP 8447F
Crystal Detector	HP 08673-60083
HP-IB Controller	HP 85F/82903A/00085-15005/ 00085-15002/00085-15004/ 00085-15001
Test Cassette	HP 11726-10001
Attenuator, Step	HP 355D

Procedure

1. Set the Signal Generator's HP-IB address to 19.
2. Connect the equipment as shown in Figure 5-34.
3. Load the test program as instructed in the paragraph titled "Automated Adjustment Procedures" in this section.
4. After the program is loaded and the EXEC Program Main Menu is displayed, press K4 to run the Pulse Adjustment.

ERRATA (cont'd)

Page 6-2, Table 6-1:
Earlier versions of the manual incorrectly listed A3A9A3 YTO Assembly as an exchange assembly 5086-6366. Delete references to this number. The only valid, correct number is 5086-7366.

Page 6-8, Table 6-3:
Change A1A2CR1 to A1A2CR2. Change A1A2CR2 to A1A2CR1.

Page 6-22, Table 6-3:
Change A1A12J10 to 1251-5649, CD7.
►Change A1A12J10 from 1251-5649 to 1251-8531, CD8, Mfg Part Number 1251-8531.

Page 6-23, Table 6-3:
Change A1W1 to 08673-20055, CD2, QTY 1, CABLE SEMI-RIGID, RF OUTPUT STD. INST. FRONT PANEL, ATTEN.-TO-FRONT PANEL, Mfr Code 28480, Mfr Part Number 08673-20055.

Add A1W1, 08673-20095, CD0, QTY1, CABLE SEMI-RIGID, RF OUTPUT, OPT 001 DIRECTIONAL COUPLER-TO-FRONT PANEL. Mfr Code 28480, Mfr Part Number 08673-20095.

Add A1W1, 08673-20088, CD1, QTY1, CABLE SEMI-RIGID, RF OUTPUT, OPT. 004 ATTEN.-TO-REAR PANEL. Mfr Code 28480, Mfr Part Number 08673-20088.

Add A1W1, 08673-20090, CD5, QTY 1, CABLE SEMI-RIGID, RF OUTPUT, OPT. 005 DIRECTIONAL COUPLER-TO-REAR PANEL. Mfr Code 28480, Mfr Part Number 08673-20090.

Page 6-34, Table 6-3:
Change A2A13J5 to 1251-5649, CD7, Mfr Part Number 1251-5649.

Page 6-54, Table 6-3:
To A3A8 information, add: 10811-90002, CD9, Qty 1, OPERATING AND SERVICE MANUAL for A3A8, Mfr Code 28480, Mfr Part Number 10811-90002.

Page 6-55, Table 6-3:
To the A3A9A3 YTO Assembly description add; "early versions of the manual incorrectly listed a restored assembly, 5086-6366".

►Page 6-59, Table 6-3:
Change first A3F1 listing to 2110-0055, CD2, FUSE 4A, Mfr Code 28480, Mfr Part Number 2110-0055.
Change second A3F1 listing to 2110-0002, CD9, FUSE 2A, Mfr Part Number 2110-0002.

Page 6-63, Table 6-3:
Delete A4R1 and A4R2.

Service Sheet 4, Figure 8-6:
Locate the ATTENUATOR DRIVER BOARD ASSEMBLY drawing on the right side of the service sheet.
Change W6 to read A1W1.

Service Sheet 1-A1, A1A2A1 ALC Board Assembly:
Change the –10V at R26, R63, R64 and R65 to –5V.
Add a line between U2 pin 13 and VR1/R75 junction; label this line –5V.

ERRATA (cont'd)

Service Sheet 3-A1, Figure 8-13:
At the top center of the schematic, locate P/O A1W4 and change it to read P/0 A1W6. At the right of the schematic, locate P/O A1W4(BIAS 1) and change it to read P/O A1W6(BIAS 1).
Locate P/O A1A9 PRE-AMP BIAS Schematic and change the HP Part Number from 08673-60026 to 08673-67001.

Service Sheet 5-A1, A1A1 Attenuator Driver Board Assembly:
On the right side of the schematic, change RF OUTPUT from J1 to A4J1.

Service Sheet 1-A3, Figure 8-49:
At the top left of schematic, locate A3A8 portion of the schematic and add a note that reads ...."Field Repairable Component. Refer to oscillator Operating And Service Manual."

Service Sheet 10-A3, A3A7, Figure 8-67:
Delete 5086-6366 from A3A9A3 2.0-6.5 GHz YTO Assembly located on the right side of the schematic.

►Service Sheet 11-A3, Figure 8-69:
Locate POWER CABLE W1, at upper left side of schematic, and change 300 VA to read 400 VA.

CHANGE 1

Page 6-25, Table 6-3:

Add A2A2C6, HP Part Number 0160-3878, CD6, Qty 1, CAPACITOR-FXD 100 pf ±10% 100 VDC CER, MFR CODE 28480, MRF PART NO. 0160-3878.

Service Sheet 4-A2, A2A2 Key-Code Assy:

Add C6, 1000 pF between U13 (14) and ground.

CHANGE 2

Page 6-61, Table 6-3:

Add A4A1C1, HP PART NUMBER 0180-3311, CD4, QTY 1, CAPACITOR FXD 6.8 μF ±10%, 20 VDC TA MFR. CODE 28480, MFR PART NO. 0180-3311.

Page 6-63, Table 6-3:

Add A4R1, HP PART NUMBER 0698-3430 , CD5, QTY 1, RESISTOR FXD 21.5Ω 1% MET FLM .125W, TC = ±100, MRF. CODE 28480, MFR PART NUMBER 0698-3430.

Service Sheet 1A4, A4 Front Panel Assembly:

Locate LINE switch on left side of schematic.

Add R1, 21.5Ω in series with center contact of switch and labeled 934.

Add C1, 6.8 μF between J3 pin 34 and pin 31.

CHANGE 3

Page 6-7, Table 6-3:

Change A1A2A1R59 and R61 to 2100-3274, Qty 2, RESISTOR-TRMR 10KΩ, Mfr. Part Number 2100-3274.
Change A1A2A1R62 to 0698-7272, CD1, Qty 1, RESISTOR 31.6K, Mfr. Part Number C3-1/8-T0-3162-F.
Change A1A2A1R63 to 0698-7270, CD9, RESISTOR 26.1K, Mfr. Part Number C3-1/8-T0-2612-F.
Change A1A2A1R64 to 0698-7267, Qty 1, RESISTOR 19.6K, Mfr. Part Number C3-1/8-T0-1962-F.
Change A1A2A1R65 to 0698-7265, Qty 1, RESISTOR 16.2K, Mfr. Part Number C3-1/8-T0-1622-F.

Service Sheet 1-A1, A1A2A1 ALC Board Assembly:

Change R59 and R61 to 10KΩ.
Change R62 to 31.6KΩ.
Change R63 to 26.1KΩ.
Change R64 to 19.6KΩ.
Change R65 to 16.2KΩ.

CHANGE 4

Part Numbers for the displays in A4 Assembly were changed. This information is already documented in the manual and is listed for Series Prefix identification only.

CHANGE 5

Page 6-56, Table 6-3:

Change A3A9A5 to 86701-60089, CD5, Mfr Part Number 86701-60089.

Page 6-57, Table 6-3:

Delete A3A9A5C16.
Change A3A9A5C22* 0140-0196, CAPACITOR FXD 150 pF ±5%, 300 Vdc Mica, Mfr Part Number 0140-0196.
Change A3A9A5L10 to 9140-0539 CD7, Qty 1, INDUCTOR RF CH MLD 3.0 μH, ±5% .105 D X .26 LG, Mfr Part Number 9140-0539.
Change A3A9A5Q4 to 1855-0235 CD8, TRANSISTOR J-FET N-CHAN TO-52, Mfr Part Number 1855-0235.
Delete A3A9A5R12 and R14.
Change A3A9A5R15 and R17 to 0757-0242, RESISTOR 1.1K 1%, .125W F TC=0±100, Mfr Part Number C4-1/8-TO-1101-F.
Change A3A9A5R18 to 0757-0419 RESISTOR 681 OHMS 1%, .125W F TC=0±100, Mfr Part Number C4-1/8-TO-6810-F.

CHANGE 5 (cont'd)

Page 6-58, Table 6-3:
Change A3A9R22 to 0698-7195, RESISTOR 19.6 OHMS 1%, .125W F TC=0±100, Mfr Part Number C4-1/8-TO-19R6-F.

Service Sheet 8-A3, Figure 8-62:
On Component Locator, delete R12, R14 and C16.

Service Sheet 8-A3, Figure 8-63:
Replace indicatd portion of Figure 8-63 with partial schematic Figure 8-63 of this supplement.
Change A3A9A5 SAMPLER ASSEMBLY Schematic title (upper left of schematic) to 86701-60089.
Change REFERENCE DESIGNATIONS Table to include deleted A3A9A5R12, R14 and C16.
Change TRANSISTOR PART NUMBERS Table Q4 listing to read 1855-0235.

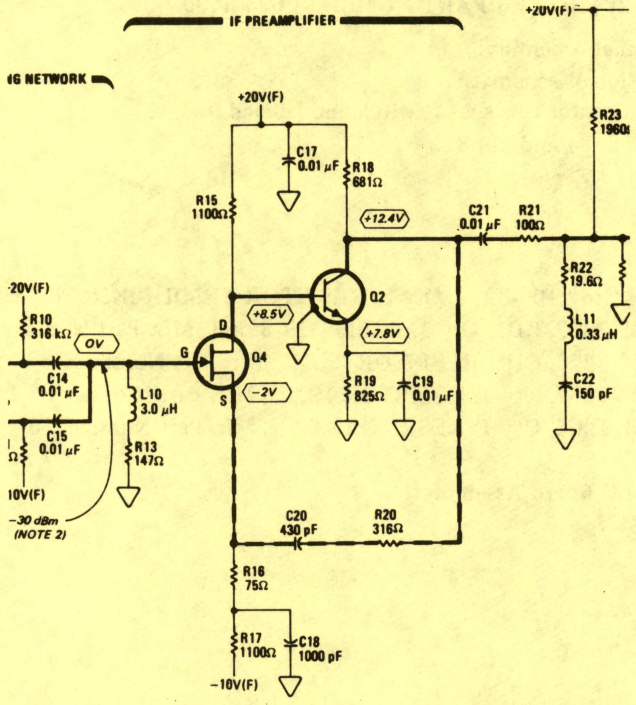

P/O Figure 8-63. YTO Sampler Assembly Schematic Diagram (P/O CHANGE 5)

► CHANGE 6

Page 6-9, Table 6-3:
Change A1A3C10 to 0140-0196, CD5 CAPACITOR FXD 150 pF ±5% 300 VDC MICA 0±60, Mfr Part Number 0140-0196.
Change A1A3C14 to 0160-2200, CD6, CAPACITOR FXD 43 pF ±5% 300 VDC CER. 0±60, Mfr Part Number 0160-2200.
Add A1A3E1 9170-0029, CD3, CORE SHIELDING BEAD, Mfr Code 28480, Mfr Part Number 9170-0029.
Change A1A3Q3 to 1854-0830, CD6, Mfr Part Number 1854-0830.

Service Sheet 7-A1, Figure 8-21:
Change A1A3C10 to 150A3C10 to 150 pF.
Change A1A3C14 to 43 pF.
Add A1A3E1 to A1A3 Q4 base lead as shown.

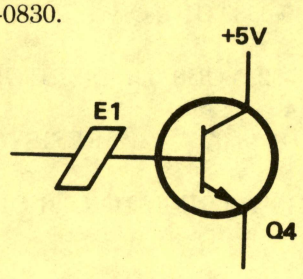

SAFETY CONSIDERATIONS

GENERAL

This product and related documentation must be reviewed for familiarization with safety markings and instructions before operation.

This product is a Safety Class I instrument (provided with a protective earth terminal).

BEFORE APPLYING POWER

Verify that the product is set to match the available line voltage and the correct fuse is installed.

SAFETY EARTH GROUND

An uninterruptible safety earth ground must be provided from the main power source to the product input wiring terminals, power cord, or supplied power cord set.

WARNINGS

Any interruption of the protective (grounding) conductor (inside or outside the instrument) or disconnecting the protective earth terminal will cause a potential shock hazard that could result in personal injury. (Grounding one conductor of a two conductor outlet is not sufficient protection.) In addition, verify that a common ground exists between the unit under test and this instrument prior to energizing either unit.

Whenever it is likely that the protection has been impaired, the instrument must be made inoperative and be secured against any unintended operation.

If this instrument is to be energized via an autotransformer (for voltage reduction) make sure the common terminal is connected to neutral (that is, the grounded side of the mains supply).

Servicing instructions are for use by service-trained personnel only. To avoid dangerous electric shock, do not perform any servicing unless qualified to do so.

Adjustments described in the manual are performed with power supplied to the instrument while protective covers are removed. Energy available at many points may, if contacted, result in personal injury.

Capacitors inside the instrument may still be charged even if the instrument has been disconnected from its source of supply.

For continued protection against fire hazard, replace the line fuse(s) only with 250V fuse(s) of the same current rating and type (for example, normal blow, time delay, etc.). Do not use repaired fuses or short circuited fuseholders.

SAFETY SYMBOLS

Instruction manual symbol: the product will be marked with this symbol when it is necessary for the user to refer to the instruction manual (see Table of Contents for page references).

Indicates hazardous voltages.

Indicates earth (ground) terminal.

WARNING

The WARNING sign denotes a hazard. It calls attention to a procedure, practice, or the like, which, if not correctly performed or adhered to, could result in personal injury. Do not proceed beyond a WARNING sign until the indicated conditions are fully understood and met.

CAUTION

The CAUTION sign denotes a hazard. It calls attention to an operating procedure, practice, or the like, which, if not correctly performed or adhered to, could result in damage to or destruction of part or all of the product. Do not proceed beyond a CAUTION sign until the indicated conditions are fully understood and met.

CONTENTS

Page

Section I
GENERAL INFORMATION

Introduction 1-1
Specifications 1-1
Safety Considerations 1-1
Instruments Covered by this Manual 1-1
Manual Changes Supplement 1-1
Description 1-2
Options 1-2
  Electrical Options 1-2
  Mechanical Options 1-3
Accessories Supplied 1-3
Equipment Required but not Supplied 1-3
Electrical Equipment Available 1-3
Recommended Test Equipment 1-3

Section II
INSTALLATION

Introduction 2-1
Initial Inspection 2-1
Preparation for Use 2-1
  Power Requirements 2-1
  Line Voltage and Fuse Selection 2-1
  Power Cables 2-1
  HP-IB Address Selection 2-2
  Interconnections 2-3
  Mating Connectors 2-3
  Operating Environment 2-4
  Bench Operation 2-4
  Rack Mounting 2-4
Storage and Shipment 2-4
  Environment 2-4
  Packaging 2-4

Section III
OPERATION

Introduction 3-1
  Operating Characteristics 3-1
  Local Operation 3-1
  Remote Operation 3-1
  Operator's Checks 3-1
  Operator's Maintenance 3-1
Turn-On Instructions 3-4
  Turn-On 3-4
  Frequency Standard Selection 3-4
HP-IB Functional Checks 3-16
  Remote and Local Messages and the LOCAL Key 3-16
  Sending the Data Message 3-17
  Receiving the Data Message 3-18
  Local Lockout and Clear Lockout/Set Local Messages 3-18

Page

  Clear Message 3-19
  Abort Message 3-19
  Status Byte Message 3-20
  Require Service Message 3-20
  Status Bit Message 3-21
  Trigger Message 3-22
Remote Operation, Auxiliary Control 3-23
  AUX Input Lines 3-23
  AUX Output Lines 3-23
Remote Operation, Hewlett-Packard Interface Bus 3-24
  HP-IB Compatibility 3-24
  Remote Mode 3-24
  Local Mode 3-24
  Addressing 3-26
  Turn-on Default Conditions 3-27
  Displays 3-27
  Output Level 3-27
  Data Messages 3-27
  Receiving Data Messages 3-27
  Sending the Data Message 3-28
  Receiving the Clear Message 3-31
  Receiving the Trigger Message 3-31
  Receiving the Remote Message 3-31
  Receiving the Local Message 3-31
  Receiving the Local Lockout Message 3-31
  Receiving the Clear Lockout/Set Local Message 3-31
  Receiving the Pass Control Message 3-32
  Sending the Require Service Message 3-32
  Sending the Status Byte Message 3-32
  Clearing the Status Byte 3-32
  Sending the Status Bit Message 3-33
  Receiving the Abort Message 3-33

Section IV
PERFORMANCE TESTS

Introduction 4-1
Abbreviated Performance Test 4-1
Calibration Cycle 4-1
Performance Test Record 4-2
Equipment Required 4-2
Test Procedures 4-2
Frequency Range and Resolution Tests 4-3
Output Level, High Level Accuracy and Flatness Tests 4-5
Low Level Accuracy Tests 4-10
Harmonics, Subharmonics & Multiples Test 4-14
Non-Harmonically Related Spurious Signals (CW and AM Modes) Tests 4-17
Power Line Related Spurious Signals Tests 4-19
Single-Sideband Phase Noise Tests 4-23

CONTENTS (cont'd)

Page
Amplitude Modulation Tests 4-29
FM Frequency Response Tests 4-34
FM Input and Meter Accuracy Tests 4-37
Incidental AM Tests 4-40
Pulse Tests 4-42
Internal Time Base Aging Rate 4-53

Section V
ADJUSTMENTS

Introduction 5-1

Section VI
REPLACEABLE PARTS

Introduction 6-1
Exchange Assemblies 6-1
Abbreviations 6-1
Replaceable Parts List 6-1
Ordering Information 6-1
Spare Parts Kit 6-1

Section VII
MANUAL CHANGES

Introduction 7-1

Section VIII
SERVICE

Introduction 8-1
Service Sheets 8-1
  Block Diagrams 8-1
  Circuit Diagrams 8-1
Safety Considerations 8-1
  Before Applying Power 8-1
  Warnings and Cautions 8-1
Recommended Test Equipment and
  Accessories 8-2
  Parts and Cable Locations 8-2
Troubleshooting 8-3
  General 8-3
  Operator Error 8-3
  Instrument Out of Specification 8-3

MODEL 8673A

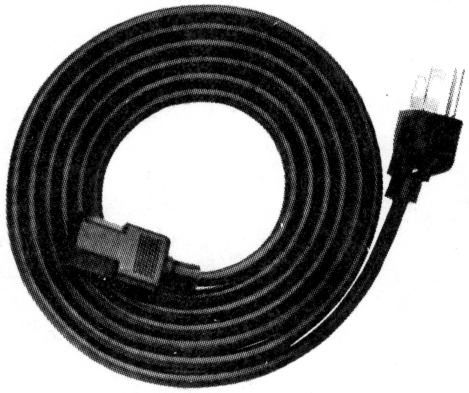

LINE POWER CABLE

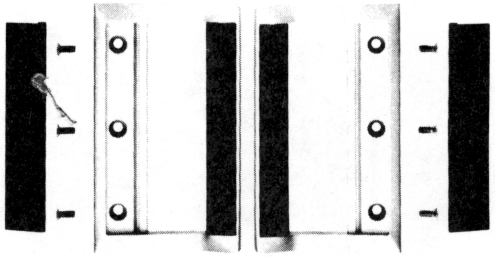

OPTION 907
FRONT HANDLE KIT

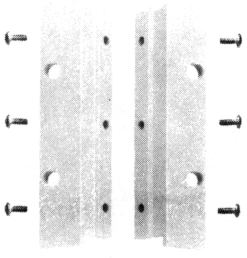

OPTION 908
RACK FLANGE KIT

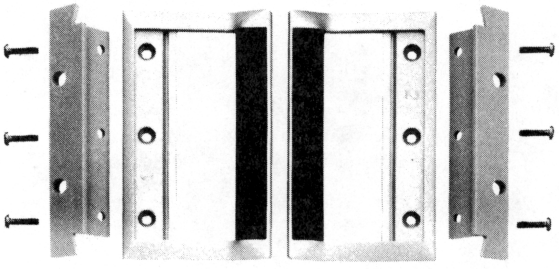

OPTION 909
RACK FLANGE AND FRONT
HANDLE COMBINATION KIT

Figure 1-1. HP Model 8673A Accessories Supplied, and Options 907, 908, and 909

SECTION I
GENERAL INFORMATION

1-1. INTRODUCTION

This manual contains information required to install, operate, test, adjust and service the Hewlett-Packard 8673A Synthesized Signal Generator. Figure 1-1 shows the Signal Generator with all of its externally supplied accessories.

The 8673A Operating and Service manual has eight sections. The subjects addressed are:

Section I, General Information
Section II, Installation
Section III, Operation
Section IV, Performance Tests
Section V, Adjustments
Section VI, Replaceable Parts
Section VII, Manual Changes
Section VIII, Service

Two copies of the operating information are supplied with the Signal Generator. One copy is in the form of an Operating Manual. The Operating Manual is a copy of the first three sections of the Operating and Service Manual. The Operating Manual should stay with the instrument for use by the operator. Additional copies of the Operating Manual can be ordered separately through your nearest Hewlett-Packard office. The part number is listed on the title page of this manual.

Also listed on the title page of this manual, below the manual part number, is a microfiche part number. This number may be used to order 100 x 150 millimetre (4 x 6 inch) microfilm transparencies of this manual. Each microfiche contains up to 96 photo-duplicates of the manual pages. The microfiche package also includes the latest Manual Changes supplement, as well as all pertinent Service Notes.

1-2. SPECIFICATIONS

Instrument specifications are listed in Table 1-1. These specifications are the performance standards or limits against which the instrument may be tested. Supplemental characteristics are listed in Table 1-2. Supplemental characteristics are not warranted specifications, but are typical characteristics included as additional information for the user.

1-3. SAFETY CONSIDERATIONS

This product is a Safety Class I instrument, that is, one provided with a protective earth terminal. The Signal Generator and all related documentation should be reviewed for familiarization with safety markings and instructions before operation. Refer to the Safety Considerations page found at the beginning of this manual for a summary of the safety information. Safety information for installation, operation, performance testing, adjustment, or service is found in appropriate places throughout this manual.

1-4. INSTRUMENTS COVERED BY THIS MANUAL

Attached to the rear panel of the instrument is a serial number plate. The serial number is in the form: 0000A00000. The first four digits and the letter are the serial number prefix. The last five digits are the suffix. The prefix is the same for identical instruments; it changes only when a configuration change is made to the instrument. The suffix however, is assigned sequentially and is different for each instrument. The contents of this manual apply directly to instruments having the serial number prefix(es) listed under SERIAL NUMBERS on the title page.

1-5. MANUAL CHANGES SUPPLEMENT

An instrument manufactured after the printing of this manual may have a serial number prefix that is not listed on the title page. This unlisted serial number prefix indicates that the instrument is different from those documented in this manual. The manual for this newer instrument is accompanied by a Manual Changes supplement. The supplement contains "change information" that explains how to adapt this manual to the newer instrument.

In addition to change information, the supplement may contain information for correcting errors in the manual. To keep the manual as current and as accurate as possible, Hewlett-Packard

MANUAL CHANGES SUPPLEMENT (cont'd)

recommends that you periodically request the latest Manual Changes supplement. The supplement is identified with the manual print date and part number, both of which appear on the manual title page. Complimentary copies of the supplement are available from Hewlett-Packard.

For information concerning a serial number prefix that is not listed on the title page or in the Manual Changes supplement, contact your nearest Hewlett-Packard office.

1-6. DESCRIPTION

The HP Model 8673A Synthesized Signal Generator has a frequency range of 2.0 to 26.0 GHz (1.95 to 26.5 GHz overrange). The output is leveled and calibrated from +8 dBm to −100 dBm, depending on the frequency. (The output is leveled and calibrated from +10 to −10 dBm for Option 001, from +7 to −100 dBm for Option 004, and from +9 to −10 dBm for Option 005.) AM, FM, and pulse modulation modes can be selected. Frequency, output level, modulation modes, and most other functions can be remotely programmed via HP-IB.

Long-term frequency stability is dependent on the time base, either an internal or external reference oscillator. The internal crystal reference oscillator operates at 10 MHz while an external oscillator may operate at 5 or 10 MHz. The output of the Signal Generator is exceptionally flat due to the action of the internal automatic leveling control (ALC) loop.

External drive signals are required for all modulation modes. AM depth and FM deviation vary linearly with the applied external voltage. Full scale modulation is attained with a 1.0 volt peak signal. Pulse modulation is compatible with TTL levels.

Two ranges of AM depth can be selected: 30% and 100%. The front panel meter can be used to set AM depth. Specified AM rates are from 100 Hz to 100 kHz. However, useable amplitude modulation can be performed at any modulation frequency between 20 Hz and 100 kHz.

Six ranges of FM deviation are selectable: 0.03, 0.1, 0.3, 1, 3, and 10 MHz. FM peak deviation can be set using the front panel meter. At output frequencies below 6.6 GHz, peak deviation is limited to 10 MHz or five times the modulation frequency, whichever is lower. From 6.6 to 12.3 GHz, peak deviation is limited to the lesser of 10 MHz or ten times the modulation frequency; from 12.3 to 18.6 GHz the lesser of 10 MHz or fifteen times the modulation frequency; from 18.6 to 26.0 GHz the lesser of 10 MHz or twenty times the modulation frequency. Usable modulation rates fall between 100 Hz and 10 MHz.

Pulse modulation has two operating modes: NORM (normal mode) and COMPL (complement mode). In normal mode the RF output is On when the drive signal is the TTL high state. In the complement mode the RF output is On when the drive signal is in the TTL low state.

The Signal Generator is compatible with HP-IB to the extent indicated by the following code: SH1, AH1, T5, TE0, L3, LE0, SR1, RL1, PP1, DC1, DT1, and C0. The Signal Generator interfaces with the bus via three-state TTL circuitry. An explanation of the compatibility code can be found in IEEE Standard 488 (1978), "IEEE Standard Digital Interface for Programmable Instrumentation" or the identical ANSI Standard MC1.1. For more detailed information relating to programmable control of the Signal Generator, refer to Remote Operation, Hewlett-Packard Interface Bus in Section III of this manual.

1-7. OPTIONS

1-8. Electrical Options

Option 001. The internal 10 dB/step attenuator has been deleted. The specified output level is +10 dBm to −10 dBm from 2.0 to 18.0 GHz, +6 dBm to −10 dBm from 18.0 to 22.0 GHz, and +3 dBm to −10 dBm from 22.0 to 26.0 dBm.

Option 002. The internal 10 MHz crystal reference is removed. An external 5 or 10 MHz reference must be used.

Option 003. A special fan allows operation from 400 Hz power mains.

Option 004. The Signal Generator's RF OUTPUT connector is located on the rear panel. Maximum output power is +7 dBm to −100 dBm from 2.0 to 18.0 GHz, +2 dBm to −100 dBm from 18.0 to 22.0 GHz, and −2 dBm to −100 dBm from 22.0 to 26.0 GHz.

Option 005. The Signal Generator's RF OUTPUT connector is located on the rear panel and the attenuator is removed. This combines Options 001 and 004. The specified output level is +9 dBm to

Electrical Options (cont'd)
−10 dBm from 2.0 to 18.0 GHz, +4 dBm to −10 dBm from 18.0 to 22.0 GHz, and +1 dBm to −10 dBm from 22.0 to 26.0 GHz.

1-9. Mechanical Options

The following options may have been ordered and received with the Signal Generator. If they were not ordered with the original shipment and are now desired, they can be ordered from the nearest Hewlett-Packard office using the part numbers included in each of the following paragraphs.

Chassis Slide Mount Kit (Option 006). This kit is extremely useful when the Signal Generator is rack mounted. Access to the internal circuits and components, or the rear panel is possible without removing the Signal Generator from the rack. The Chassis Slide Mount Kit part number is 1494-0017. An adapter (HP part number 1494-0023) is needed if the instrument rack mounting slides are to be mounted in a standard EIA rack. The slides without the adapter can be directly mounted in the HP system enclosures.

Front Handle Kit (Option 907). Ease of handling is increased with the front panel handles. The Front Handle Kit part number is 5061-0089.

Rack Flange Kit (Option 908). The Signal Generator can be solidly mounted to the instrument rack using the flange kit. The Rack Flange Kit part number is 5061-0077.

Rack Flange and Front Handle Combination Kit (Option 909). This is a unique part which combines both functions. It is not simply a front handle kit and a rack flange kit packaged together. The Rack Flange and Front Panel Combination Kit part number is 5061-0083.

1-10. ACCESSORIES SUPPLIED

The accessories supplied with the Signal Generator are shown in Figure 1-1.

a. The line power cable is supplied in several configurations, depending on the destination of the original shipment. Refer to Power Cables in Section II of this manual.

b. An additional fuse is shipped only with instruments that are factory configured for 100/120 Vac operation. This fuse has a 2A rating and is for reconfiguring the instrument for 220/240 Vac operation.

1-11. EQUIPMENT REQUIRED BUT NOT SUPPLIED

For Option 002 instruments, which lack an internal frequency standard, an external reference must be used. The performance of the external reference should at least match the specifications of the HP Model 10811B Crystal Oscillator. In particular, the frequency should be within ±50 Hz of 10 MHz. When using an external oscillator, microphonically generated or line related spurious signals may increase. SSB phase noise may also be degraded at some offsets from the carrier.

An external signal source is required if amplitude, frequency, or pulse modulation is desired. For AM, the source should have a variable output of 0 to 1 volt peak into 600 ohms, frequency rates up to 100 kHz, and distortion of less than 1%. For FM, the source should have a variable output of 0 to 1 volt peak into 50 ohms, frequency rates up to 10 MHz, and distortion of less than 1%. For pulse modulation, the source should have TTL output levels (>2.4V for a TTL high state and <0.4V for a TTL low state) and 50 ohms nominal impedance. Pulse repetition frequency rates should be 1 Hz to 1 MHz with transition times <10 ns.

The HP 8116A Pulse/Function Generator is adequate for modulating the Signal Generator and meeting the stated standards. This remotely programmable signal source is convenient for full remote control of modulation levels and rates.

The HP 8112A Pulse Generator is recommended for pulse modulation applications that require pulse delay.

1-12. ELECTRICAL EQUIPMENT AVAILABLE

The Signal Generator has an HP-IB interface and can be used with any HP-IB compatible computing controller or computer for automatic systems applications.

The 11726A Support Kit is available to aid the user in maintaining and servicing the Signal Generator. It consists of cables, adaptors, terminations, prerecorded programs, extender boards, and a test extender board.

1-13. RECOMMENDED TEST EQUIPMENT

Table 1-3 lists the test equipment recommended for use in testing, adjusting and servicing the Signal Generator. The Critical Specification column describes the essential requirements for each piece

of test equipment. Other equipment can be substituted if it meets or exceeds these critical specifications.

The Recommended Model column may suggest more than one model. The first model shown is usually the least expensive, single-purpose model. Alternate models are suggested for additional features that would make them a better choice in some applications.

Table 1-1. Specifications (1 of 6)

Electrical Characteristics	Performance Limits	Conditions
FREQUENCY		
Range	2.0—26.0 GHz (1.95—26.5 GHz overrange)	
Resolution	1 kHz 2 kHz 3 kHz 4 kHz	2.0 to 6.6 GHz 6.6 to 12.3 GHz 12.3 to 18.6 GHz 18.6 to 26.0 GHz
Accuracy and Stability	Same as reference oscillator	
Reference Oscillator: Frequency Aging Rate	10 MHz <5 x 10^{10}/day	After a 10 day warmup (typically 24 hours in a normal operating environment)
Switching Time (for frequency to be within specified resolution and output power to be within 3 dB of set level)	<20 ms	CW and AM modes; AUTO PEAK disabled
SPECTRAL PURITY		
Single-sideband Phase Noise		1 Hz bandwidth; CW mode
2.0—6.6 GHz	-58 dBc -70 dBc -78 dBc -86 dBc -110 dBc	10 Hz offset from carrier 100 Hz offset from carrier 1 kHz offset from carrier 10 kHz offset from carrier 100 kHz offset from carrier
6.6—12.3 GHz	-52 dBc -64 dBc -72 dBc -80 dBc -104 dBc	10 Hz offset from carrier 100 Hz offset from carrier 1 kHz offset from carrier 10 kHz offset from carrier 100 kHz offset from carrier
12.3—18.6 GHz	-48 dBc -60 dBc -68 dBc -76 dBc -100 dBc	10 Hz offset from carrier 100 Hz offset from carrier 1 kHz offset from carrier 10 kHz offset from carrier 100 kHz offset from carrier
18.6—26.0 GHz	-46 dBc -58 dBc -66 dBc -74 dBc -98 dBc	10 Hz offset from carrier 100 Hz offset from carrier 1 kHz offset from carrier 10 kHz offset from carrier 100 kHz offset from carrier

Table 1-1. Specifications (2 of 6)

Electrical Characteristics	Performance Limits	Conditions
SPECTRAL PURITY (cont'd)		
Harmonics	<–40 dBc	Up to 26 GHz; output level meter readings ≤ 0 dB on 0 dBm range and below
Subharmonics and Multiples	<–25 dBc	2.0 to 18.6 GHz
Thereof	<–20 dBc	18.6 to 26.0 GHz
Spurious:		CW and AM modes
Nonharmonically Related	<–70 dBc	2.0 to 6.6 GHz
	<–64 dBc	6.6 to 12.3 GHz
	<–60 dBc	12.3 to 18.6 GHz
	<–58 dBc	18.6 to 26.0 GHz
Power line related and fan rotation related within 5 Hz below line frequencies and multiples thereof		For Opt. 003 instruments (400 Hz line operation), power line related spurs typically increase by 10 dB.
2.0—6.6 GHz	–50 dBc	<300 Hz offset from carrier
	–60 dBc	300 Hz to 1 kHz offset from carrier
	–65 dBc	>1 kHz offset from carrier
6.6—12.3 GHz	–44 dBc	<300 Hz offset from carrier
	–54 dBc	300 Hz to 1 kHz offset from carrier
	–59 dBc	>1 kHz offset from carrier
12.3—18.6 GHz	–40 dBc	<300 Hz offset from carrier
	–50 dBc	300 Hz to 1 kHz offset from carrier
	–55 dBc	>1 kHz offset from carrier
18.6—26.0 GHz	–38 dBc	<300 Hz offset from carrier
	–48 dBc	300 Hz to 1 kHz offset from carrier
	–53 dBc	>1 kHz offset from carrier
RF OUTPUT		
Output Level:		+15 to +35°C
Standard Leveled Output	+8 dBm to –100 dBm	2.0 to 18.0 GHz
	+4 dBm to –100 dBm	18.0 to 22.0 GHz
	0 dBm to –100 dBm	22.0 to 26.0 GHz
Option 001 Leveled Output	+10 dBm to –10 dBm	2.0 to 18.0 GHz
	+6 dBm to –10 dBm	18.0 to 22.0 GHz
	+3 dBm to –10 dBm	22.0 to 26.0 GHz
Option 004 Leveled Output	+7 dBm to –100 dBm	2.0 to 18.0 GHz
	+2 dBm to –100 dBm	18.0 to 22.0 GHz
	–2 dBm to –100 dBm	22.0 to 26.0 GHz
Option 005 Leveled Output	+9 dBm to –10 dBm	2.0 to 18.0 GHz
	+4 dBm to –10 dBm	18.0 to 22.0 GHz
	+1 dBm to –10 dBm	22.0 to 26.0 GHz

Table 1-1. Specifications (3 of 6)

Electrical Characteristics	Performance Limits	Conditions
RF OUTPUT (cont'd)		
Remote Programming Absolute Level Accuracy		
2.0—6.6 GHz	±1.25 dB ±1.00 dB ±1.50 dB ±1.70 dB ±2.00 dB ±2.00 dB plus ±0.1 dB per 10 dB step below –30 dBm	+10 dBm output level range 0 dBm output level range –10 dBm output level range –20 dBm output level range –30 dBm output level range <–30 dBm output level range
6.6—12.3 GHz	±1.50 dB ±1.25 dB ±1.75 dB ±1.95 dB ±2.25 dB ±2.25 dB plus ±0.1 dB per 10 dB step below –30 dBm	+10 dBm output level range 0 dBm output level range –10 dBm output level range –20 dBm output level range –30 dBm output level range <–30 dBm output level range
12.3—18.6 GHz	±1.75 dB ±1.50 dB ±2.10 dB ±2.30 dB ±2.70 dB ±2.70 dB plus ±0.2 dB per 10 dB step below –30 dBm	+10 dBm output level range 0 dBm output level range –10 dBm output level range –20 dBm output level range –30 dBm output level range <–30 dBm output level range
18.6—26.0 GHz	±2.00 dB ±2.55 dB ±2.85 dB ±3.30 dB ±3.30 dB plus ±0.2 dB per 10 dB step below –30 dBm	0 dBm output level range –10 dBm output level range –20 dBm output level range –30 dBm output level range <–30 dBm output level range
Manual Absolute Level Accuracy	Add ±0.75 dB to remote programming absolute level accuracy	Absolute level accuracy specifications include allowances for detector linearity, temperature, flatness, attenuator accuracy, meter accuracy, and measurement uncertainty
Remote Programming Output Level Resolution	0.1 dB	
Flatness	±0.75 dB ±1.00 dB ±1.25 dB ±1.75 dB	0 dBm range; +15 to +35°C 2.0 to 6.6 GHz 2.0 to 12.3 GHz 2.0 to 18.6 GHz 2.0 to 26.0 GHz

(continued)

Table 1-1. Specifications (4 of 6)

Electrical Characteristics	Performance Limits	Conditions
RF OUTPUT (cont'd)		
Flatness (cont'd)		(Min. to max. variation in power level across specified frequency limits is less than 2 times flatness spec.)
Output Level Switching Time (to be within ±1 dB of final level)	<25 ms	
PULSE MODULATION		
ON/OFF Ratio	>80 dB	
Rise and Fall Times	<35 ns	AUTO PEAK enabled
Minimum Leveled RF Pulse Width	<100 ns	
Pulse Repetition Frequency	dc to 1 MHz	
Minimum Duty Cycle	<0.0001	When internally leveled; no restriction when unleveled
Minimum Pulse Off Time	<300 ns	
Maximum Peak Power	Same as in CW mode	
Peak Level Accuracy	±1.0 dB	Relative to CW; +15 to +35°C
Overshoot, Ringing	<0.2 <0.25	2.0 to 6.6 and 6.7 to 26.0 GHz 6.6 to 6.7 GHz
AMPLITUDE MODULATION		
Depth		+15 to +35°C
	0 to 75%	2.0 to 18.0 GHz; 0 dBm maximum carrier level
	0 to 75%	18.0 to 24.0 GHz; –3 dBm maximum carrier level
	0 to 50%	24.0 to 26.0 GHz; –5 dBm maximum carrier level
Rates	20 Hz to 100 kHz	3 dB bandwidth, 30% depth
Sensitivity (% AM per Vpk)	30%/V and 100%/V (depending on range)	Maximum input 1 Vpk into 600 ohms nominal; AM depth is linearly controlled by varying input level between 0 and 1V peak

Table 1-1. Specifications (5 of 6)

Electrical Characteristics	Performance Limits	Conditions
AMPLITUDE MODULATION (cont'd)		
Indicated Meter Accuracy	±7% of reading ±3% of range	100 Hz to 10 kHz rates
Accuracy Relative to External AM Input Level	±4% of reading ±2% of range	100 Hz to 10 kHz rates
Incidental Phase Modulation (100 Hz to 10 kHz rates; 30% depth)	<0.4 radians <0.8 radians <1.2 radians <1.6 radians <2.0 radians	2.0 to 6.6 GHz 6.6 to 12.3 GHz >12.3 to 18.6 GHz >18.6 to 24.0 GHz >24.0 to 26.0 GHz
Incidental FM	Incidental phase modulation x f_{mod}	
FREQUENCY MODULATION		
Frequency Response Relative to a 100 kHz Rate	±2 dB ±2 dB	100 Hz to 3 MHz, 30 and 100 kHz/V ranges 3 kHz to 3 MHz, 300 kHz/V and 1, 3, and 10 MHz/V ranges
Maximum Peak Deviation	The smaller of 10 MHz or f_{mod} x 5 The smaller of 10 MHz or f_{mod} x 10 The smaller of 10 MHz f_{mod} x 15 The smaller of 10 MHz f_{mod} x 20	2.0 to 6.6 GHz 6.6 to 12.3 GHz 12.3 to 18.6 GHz 18.6 to 26.0 GHz
Sensitivity (peak deviation per Vpk)	Maximum input 1 Vpk into 50 ohms nominal	All ranges; peak deviation is linearly controlled by varying input level between 0 and 1 Vpk
Indicated Meter Accuracy	±12% of reading ±3% of range	100 kHz rate
Accuracy Relative to External FM Input Level	±7% of reading ±3% of range	100 kHz rate
Incidental AM	<5%	Rates <100 kHz; peak deviations ≤1 MHz
DIGITAL SWEEP		
Sweep Function	Start/Stop or ΔF (Span) Sweep	
Sweep Modes	Manual, Auto, Single	
Step Size	Maximum of 9999 frequency points per sweep	Minimum step size equals frequency resolution; step size set directly or as number of frequency points per sweep

Table 1-1. Specifications (6 of 6)

Electrical Characteristics	Performance Limits	Conditions
DIGITAL SWEEP (cont'd)		
Dwell Time	Set from 1 to 255 ms per step	
Markers	5 independent, fixed frequency markers set from front panel	Resolution and accuracy are identical to RF output
REAR PANEL AUXILIARY CONTROL CONNECTOR		
14-Pin Connector	Trigger Output Stop Sweep Input End Sweep Output Trigger Sweep Input Negative Z-axis Blanking Service Function Frequency Increment Frequency Decrement Blank Frequency Display Recall Register 1 Sequential Register Recall Ground	
Input Required	Contact closure to ground or 5 μs, negative true TTL pulse	(Internal debounce circuit available to debounce external inputs.)
Outputs	5 μs negative true TTL pulse	
REMOTE PROGRAMMING	All functions HP-IB programmable with the exception of LINE switch	
GENERAL		
Operating Temperature Range	0 to +55°C	
Power Requirements: Line Votage (100, 120, 220, or 240V) Power Dissipation	 +5, −10% 400 V·A maximum	 48—66 Hz
Conducted and Radiated Electromagnetic Interference	MIL-STD 461A-1968	Conducted and radiated interference is within the requirements of methods CE03 and RE02 of MIL-STD 461A, VDE 0871, and CISPR publication 11.
Net Weight	29 kg (64 lb)	
Dimensions: Height Width Depth	146 mm (5.7") 425 mm (16.8") 620 mm (24.4")	For ordering cabinet accessories, module sizes are 5-1/4H, 1MW, 23D.

Table 1-2. Supplemental Characteristics (1 of 2)

Supplemental characteristics are intended to provide information useful in applying the instrument by giving typical, but non-warranted, performance parameters.

FREQUENCY

Internal Reference: The internal reference oscillator accuracy is a function of time base calibration ± aging rate, ± temperature effects, and ± line voltage effects. Typical temperature and line voltage effects are $<1 \times 10^{-10}/°C$ and $<5 \times 10^{-10}/+5\%$ to -10% line voltage change. Reference oscillator is kept at operating temperature in STANDBY mode with the instrument connected to mains power. For instruments disconnected from mains power less than 24 hours, the aging rate is $<5 \times 10^{-10}$/day after a 24 hour warmup.

External Reference: 5 or 10 MHz at a level of 0.1 to 1 Vrms into 50 ohms. Stability and spectral purity of the microwave output will be partially determined by characteristics of the external reference frequency.

Reference Outputs: 10 MHz and 100 MHz at a level of 0.2 Vrms nominal into 50 ohms.

SPECTRAL PURITY

Residual FM in CW and FM Modes, 2.0 to 6.6 GHz* (noise and power line related):

Mode/FM Range	Post-Detection Bandwidth	
	300 Hz—3 kHz	50 Hz—15 kHz
CW, 30, and 100 kHz/V	12 Hz rms	60 Hz rms
300 kHz/V, and 1, 3, and 10 MHz/V	15 Hz rms	75 Hz rms

*Residual FM doubles for 6.6—12.3 GHz, triples for 12.3—18.6 GHz, and quadruples for 18.6—26.0 GHz.

Single-sideband Phase Noise (1 Hz BW, CW mode, 2.0 to 6.6 GHz):*

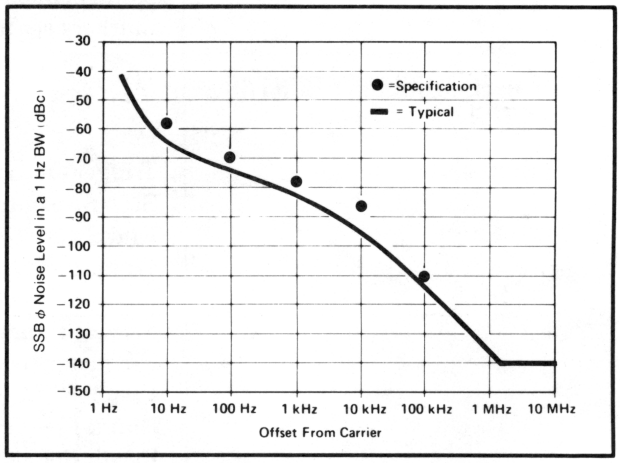

**Add 6 dB for 6.6 to 12.3 GHz, 10 dB for 12.3 to 18.6 GHz, and 12 dB for 18.6 to 26.0 GHz.*

RF OUTPUT

Output Level Switching Time (to be within ±1 dB of final level with no range change):

Operating Mode	Output Level Switching Time
CW	<15 ms
AM, Pulse, Sweep	<5 ms

For power settings >0 dBm, changes in frequency of several GHz in one step may require additional AUTO PEAK enabling to stabilize power at the desired level. Spurious output oscillations may occur for settings above +8 dBm.

External leveling device characteristics will determine output flatness, absolute level accuracy, and switching time in external leveling modes.

Impedance: 50 ohms.

Source SWR: <2.0.

Table 1-2. Supplemental Characteristics (2 of 2)

Output Level Accuracy:

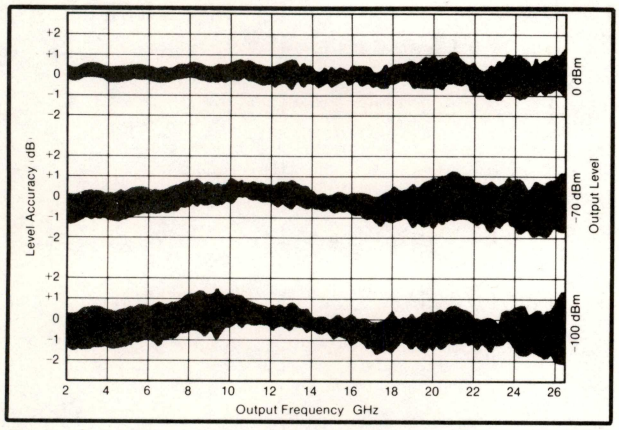

Typical 8673A output level accuracy at 0, −70, and −100 dBm level settings.

PULSE MODULATION

Pulse Width: Pulse widths less than 100 ns are possible with degraded peak power level accuracy relative to CW.

Pulse Input:

Normal Mode: >3V on, <0.5V off

Complement Mode: <0.5V on, >3V off

Impedance: 50 ohms nominal

Damage Level: more positive +6 Vpk from <50 ohm source or more negative than −0.5 Vpk from ≤50 ohm source.

Pulse Width Compression: <35 ns.

Maximum Delay Time: 150 ns.

Video Feedthrough: <−50 dBc.

AMPLITUDE MODULATION

Frequency Response Relative to a 1 kHz Rate: ±0.25 dB, 100 Hz—10 kHz.

Distortion:

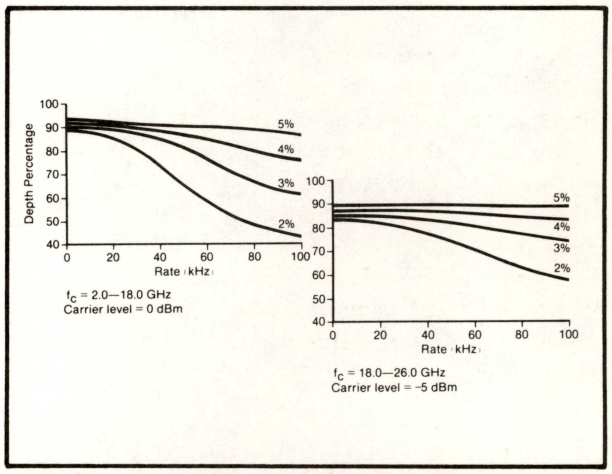

Typical 8673A AM distortion versus modulation rate and depth.

FREQUENCY MODULATION

Rates (3 dB bandwidth): 100 Hz to 10 MHz, 30 and 100 kHz/V ranges; 1 kHz to 10 MHz, 300 kHz/V, and 1, 3, and 10 MHz/V ranges.

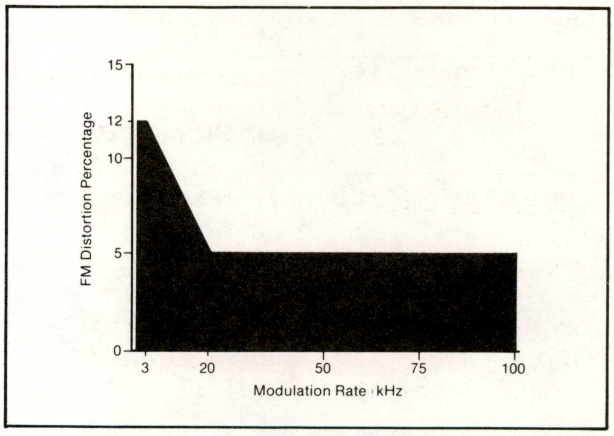

Typical 8673A FM distortion versus modulation rate.

DIGITAL SWEEP

Rear Panel BNC Sweep Connections:

Sweep Out: 0 to +10V ramp start to stop (maximum adjustable from +4 to +12V)

Sweep Reference: 1V/GHz ramp (+18V maximum)

Z-Axis Blanking/Markers

Tone Marker Output

Penlift

Table 1-3. Recommended Test Equipment (1 of 4)

Equipment	Critical Specifications	Recommended
AC Voltmeter	Range: 1 mV to 10 V Accuracy: +/-1.5% of full scale +/-1.5% of reading Frequency Response: 3 kHz to 3 MHz	HP 400E
Audio Analyzer	Freq. Range: 20Hz to 100kHz. Accuracy: +/-4% of full scale	HP 8903A
Audio Source	Freq. Range: 20Hz to 100kHz. Output Level: 1mV to 6V open circuit. Flatness: +/-2.5%	HP 8903A
Amplifier, 26 dB	Noise Figure: <8.5dB. Input/Output Impedance: 50 Ohms Gain: 26dB +/-2dB. Output Power: >7dBm. Freq. Range: 100kHz to 1GHz.	HP 8447D
Amplifier, 40 dB	Noise Figure: <5 dB Input/Output Impedance: 50 Ohms Gain: 40 dB +/- 3 dB Output Power: >+6dBm. Freq. Range: 0.1 to 400 MHz	HP 8447A Opt. 001
Attenuator, Step	Range: DC-26 GHz Accuracy: +/-7% SWR: <2.2	HP 8495D Opt. 004
Attenuator, 3 dB	Range: DC-1 GHz Accuracy: +/-0.5 dB SWR: <1.3	HP 8491A Opt. 003
Attenuator, 6 dB	Range: DC-26 GHz Accuracy: +/-0.6 dB SWR: <1.6	M9-6*
Attenuator, 20 dB	Range: DC-26 GHz Accuracy: +/-1.0 dB SWR: <1.6	M9-20*
Controller, HP-IB with 16K Memory and Advanced Progamming ROM	HP-IB compatibility as defined by IEEE Standard 488-1975 and the identical ANSI Standard MC1.1: SH1, AH1, T2, TE0, L2, LE0, SR0, RL0, PP0, DC0, DT0, and C1, 2, 3, 4, 5.	HP 85F/ 82903A/ 00085-15005

Table 1-3. Recommended Test Equipment (2 of 4)

Equipment	Critical Specifications	Recommended
Crystal Detector	Frequency Range: 2 to 26 GHz Frequency Response: +/-1.5 dB	HP 8473A
Digital Voltmeter	Range: DC -40 to +22V Accuracy: +/-0.1% of reading Resolution: 0.001 Vdc; 1 mVrms Frequency Response: 20 Hz to 100 kHz	HP 3455A
Frequency Counter	Range: 10 Hz to 500 MHz and 2 to 26 GHz Resolution: 10 Hz to 500 MHz: 1 Hz 2 to 26 GHz: 100 Hz	HP 5343A
Frequency Standard	Long Term Stability: Better than (10 to the -10 power)/day	HP 5065A
Local Oscillator	Range: 2 to 26 GHz Level: 2 to 18.6 GHz: +7 dBm 18.6 to 26 GHz: +3 dBm Single Sideband Phase Noise and Spurious Signals: Same as Model 8673A	HP 8673A
Mixer	2 to 26 GHz, 3 port SWR: XXXXXXXXXXX	RHG DMI-26**
Modulation Analyzer	Frequency Range: 150 kHz to 990 MHz Input Level: -20 to +13 dBm Amplitude Modulation: Rates: 25 Hz to 25 kHz Depth: to 99% Accuracy: +/- 2% at 1 kHz Flatness: +/- 0.5% Demodulated Output Distortion: (0.3% for 50% depth; (0.6% for 90% depth Incidental Phase Modulation: (0.05 radians for 50% depth at 1 kHz rate (50 Hz to 3 kHz bandwidth) Frequency Modulation: Rates: 25 Hz to 25 kHz Deviation: to 99 kHz Accuracy: +/-2% at 1 kHz	HP 8901A

Table 1-3. Recommended Test Equipment (3 of 4)

Equipment	Critical Specifications	Recommended
Oscilloscope	Bandwidth: 200 MHz Vertical Sensitivity: 10 mV/div Vertical Input: 50 ohms AC or DC coupled Delayed Sweep Mode: 20 ns/div External Trigger Capability	HP 1715A
Power Meter	Range: +10 dB to -25 dB Accuracy: +/- 0.2 dB Must be compatible with Power Sensor	HP 436A
Power Sensor	Frequency Range: 2 to 26 GHz Input Impedance: 50 Ohms SWR: <1.25 Must be compatible with Power Meter	HP 8485A
Pulse Generator	Rate: 10 Hz to 4 MHz Rise and Fall Times <5 ns Output Impedance: 50 ohms Output Level: 0 to 3.5 V Pulse Width: 90 ns to 2 us	HP 8013B
Signature Analyzer	TTL Levels	HP 5004A
Spectrum Analyzer	Frequency Response: 5 Hz to 40 kHz Resolution Bandwidth: 3 Hz minimum Frequency Span per division: 50 Hz - 500 MHz Amplitude Range: 0 to -70 dB	HP 3580A
Spectrum Analyzer	Frequency Range- 20Hz to 300kHz Freq Span per Division- 20Hz min Noise Sidebands- >90 dB below CW signal, 3 kHz offset, 100 Hz IF Bandwidth. Input Level Range: -10 to -60 dBm. Log Reference Level Control: 70 dB dynamic range in 10 dB steps Accuracy: +/- 0.2 dB.	HP 8556A/ 8552B/ 141T

Table 1-3. Recommended Test Equipment (4 of 4)

Equipment	Critical Specifications	Recommended
Spectrum Analyzer	Frequency Response: 2 to 26 GHz Frequency Span per Division: 1 kHz minimum Amplitude Range: 0 to -70 dB Noise Sidebands: >75 dB down 30 kHz from signal at 1 kHz resolution Bandwidth	HP 8569A Opt. H20
External Mixer (used with HP Model 8569A H20 Spectrum Analyzer)	Frequency range to 26 GHz Compatible with HP Model 8569A Option H02 Spectrum Analyzer in external mixing mode.	HP 11517A Opt. C02
Waveguide Taper Section (used with HP Model 8569A H20 Spectrum Analyzer)	18 to 26.5 GHz	HP 11519A
Adapter, Waveguide to Coax (used with HP Model Spectrum Analyzer)	SWR: <1.07 Freq. Range: 18.0 to 26.5GHz Waveguide Size EIA: WR42 Coaxial Connector: APC-3.5(F) W/G Flange UG-597U.	HP K281C
Termination	50 Ohms BNC	HP 11593A
Test Oscillator	Level: 0 to 3V into 50 ohms or 300 ohms Range: 10 kHz to 1 MHz	HP 651B
Power Source, AC, Variable Frequency	Range: 60Vac to 240Vac Frequency: 48Hz to 400Hz Accuracy: +/- 2 Hz	501TC/800T***

* Weinschel Engineering 4419 Van Neys Blvd. Suite 404
Sherman Oaks, California 91403 Tel. (213) 990-8606

** RGH Electronics Laboratory, Inc., 161 East Industry Court,
Deer Park, N.Y. 11729, Tel.)516) 242-1100, TWX 510-227-6083.

*** California Instruments XXXXXXXXXXXXXXXXXXXXXXXXXXXXXX

SECTION II
INSTALLATION

2-1. INTRODUCTION

This section provides the information needed to install the Signal Generator. Included is information pertinent to initial inspection, power requirements, line voltage selection, power cables, interconnection, environment, instrument mounting, storage and shipment.

2-2. INITIAL INSPECTION

WARNING

To avoid hazardous electrical shock, do not perform electrical tests when there are signs of shipping damage to any portion of the outer enclosure (covers, panels, meters).

Inspect the shipping container for damage. If the shipping container or cushioning material is damaged, it should be kept until the contents of the shipment have been checked for completeness and the instrument has been checked mechanically and electrically. The contents of the shipment should be as shown in Figure 1-1. Procedures for checking electrical performance are given in Section IV. If the contents are incomplete, if there is mechanical damage or defect, or if the instrument does not pass the electrical performance test, notify the nearest Hewlett-Packard office. If the shipping container is damaged or the cushioning material shows signs of stress, notify the carrier as well as the Hewlett-Packard office. Keep the shipping materials for the carrier's inspection.

2-3. PREPARATION FOR USE

2-4. Power Requirements

The Signal Generator requires a power source of 100, 120, 220 or 240 Vac, +5% to −10%, 48 to 66 Hz single phase (for Option 003 instruments, 400 Hz single phase and 120 Vac, +5%, −10% only). Power consumption is 400 V·A maximum.

WARNINGS

This is a Safety Class I product (that is, provided with a protective earth terminal). An uninterruptible safety earth ground must be provided from the main power source to the product input wiring terminals, power cord or supplied power cord set. Whenever it is likely that the protection has been impaired, the product must be made inoperative and be secured against any unintended operation.

If this instrument is to be energized via an external autotransformer, make sure the autotransformer's common terminal is connected to the neutral (that is, the grounded side of the mains supply).

2-5. Line Voltage and Fuse Selection

CAUTION

BEFORE PLUGGING THIS INSTRUMENT into the mains (line) voltage, be sure the correct voltage and fuse have been selected.

Verify that the line voltage selection card and the fuse are matched to the power source. Refer to Figure 2-1, Line Voltage and Fuse Selection.

Fuses may be ordered under HP part numbers 2110-0055, 4.0A (250V) for 100/120 Vac operation and 2110-0083, 2.0A (250V) for 220/240 Vac operation.

2-6. Power Cables

WARNING

BEFORE CONNECTING THIS INSTRUMENT, the protective earth terminal of this instrument must be connected to the protective conductor of the (mains) power cord. The mains plug shall only be inserted in a socket outlet provided with a protective earth contact. The protective action must not be negated by the use of an extension cord (power cable) without a protective conductor (grounding).

This instrument is equipped with a three-wire power cable. When connected to an appropriate ac power receptacle, this cable grounds the instrument

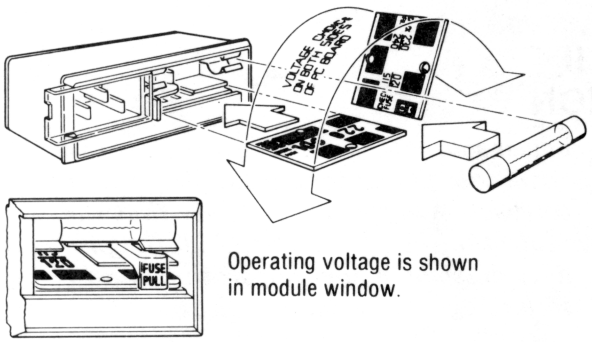

Operating voltage is shown in module window.

SELECTION OF OPERATING VOLTAGE

1. Open cover door, pull the FUSE PULL lever and rotate to left. Remove the fuse.
2. Remove the Line Voltage Selection Card. Position the card so the line voltage appears at top-left corner. Push the card firmly into the slot.
3. Rotate the FUSE PULL lever to its normal position. Insert a fuse of the correct value in the holder. Close the cover door.

WARNING

To avoid the possibility of hazardous electrical shock, do not operate this instrument at line voltages greater than 126.5 Vac with line frequencies greater than 66 Hz (leakage currents at these line settings may exceed 3.5 mA).

Figure 2-1. Line Voltage and Fuse Selection

cabinet. The power cable plug shipped with each instrument depends on the country of destination. Refer to Figure 2-2 for the part numbers of power cables available.

2-7. HP-IB Address Selection

WARNINGS

This task should be performed only by service trained persons who are aware of the potential shock hazard of working on an instrument with protective covers removed.

To avoid hazardous electrical shock, the line (mains) power cable should be disconnected before attempting to change the HP-IB address.

In the Signal Generator, the HP-IB talk and listen addresses can be selected by an internal switch or by a front panel setting. Refer to Table 2-1 for a listing of talk and listen addresses. The address is factory set for a Talk address of "S" and a Listen address of "3". (In binary this is 10011; in decimal this is 19.) The following procedure explains how the switches are to be set.

a. Set the LINE switch to STBY and disconnect the line power cable.

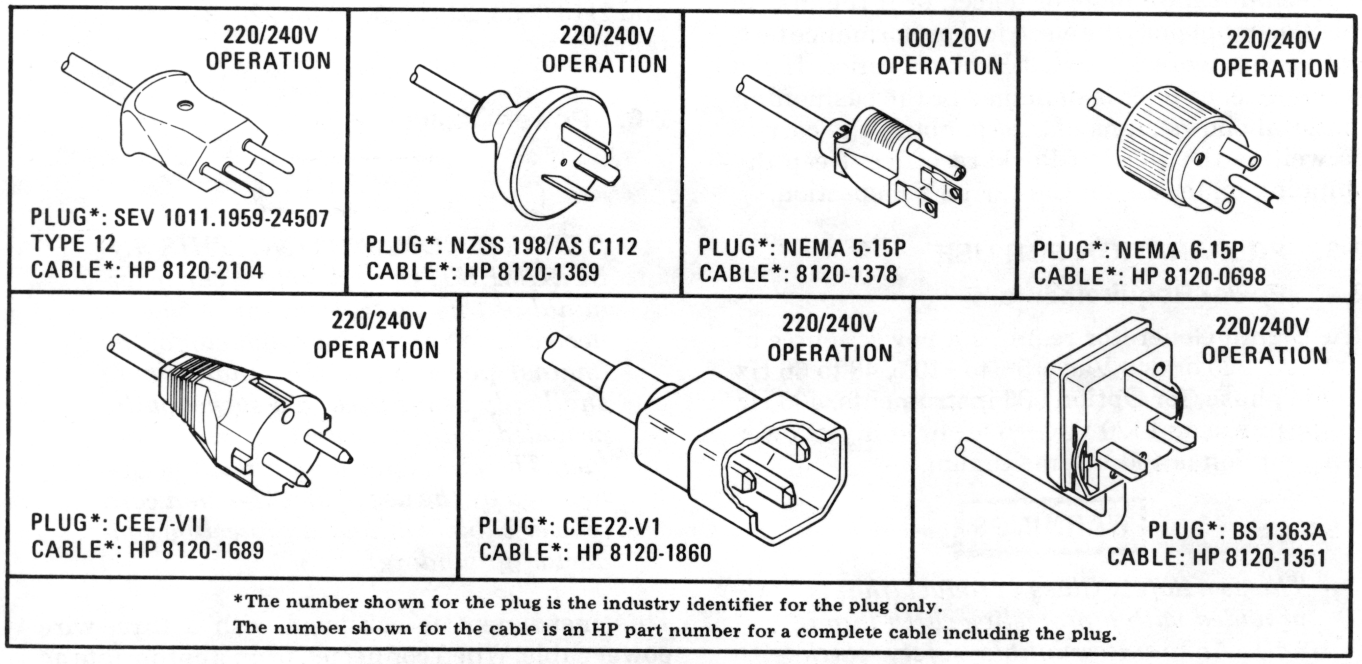

*The number shown for the plug is the industry identifier for the plug only.
The number shown for the cable is an HP part number for a complete cable including the plug.

Figure 2-2. Power Cable and Mains Plug Part Numbers

HP-IB Table 2-1. Allowable HP-IB Address Codes

Address Switches					Talk Address Character	Listen Address Character	Decimal Equivalent
MSB				LSB			
0	0	0	0	0	@	SP	0
0	0	0	0	1	A	!	1
0	0	0	1	0	B	"	2
0	0	0	1	1	C	#	3
0	0	1	0	0	D	$	4
0	0	1	0	1	E	%	5
0	0	1	1	0	F	&	6
0	0	1	1	1	G	'	7
0	1	0	0	0	H	(	8
0	1	0	0	1	I	)	9
0	1	0	1	0	J	*	10
0	1	0	1	1	K	+	11
0	1	1	0	0	L	,	12
0	1	1	0	1	M	-	13
0	1	1	1	0	N	.	14
0	1	1	1	1	O	/	15
1	0	0	0	0	P	0	16
1	0	0	0	1	Q	1	17
1	0	0	1	0	R	2	18
1	0	0	1	1	S	3	19
1	0	1	0	0	T	4	20
1	0	1	0	1	U	5	21
1	0	1	1	0	V	6	22
1	0	1	1	1	W	7	23
1	1	0	0	0	X	8	24
1	1	0	0	1	Y	9	25
1	1	0	1	0	Z	:	26
1	1	0	1	1	[	;	27
1	1	1	0	0	\	<	28
1	1	1	0	1	]	=	29
1	1	1	1	0	^	>	30

HP-IB Address Selection (cont'd)

b. Remove the Signal Generator's top cover by removing the two plastic feet from the rear of the top cover and loosening the screw at the middle of the rear edge of the top cover.

c. Remove the A2 Assembly's protective cover.

d. Remove the A2A9 Freq Output HP-IB Assembly. This assembly can be recognized as having one black and one white printed circuit board extractor.

e. Set the switches to the desired HP-IB address (in binary) and the Talk Only or Listen Only condition. The switch is illustrated in Figure 2-3. If both the Talk Only and the Listen Only switches are set to "1", the Talk Only setting overrides the Listen Only setting.

f. Reinstall the A2A9 Assembly.

g. To confirm the setting, press and hold the LOCAL/DISPLAY ADDRESS key on the front panel. The current HP-IB address will be displayed in decimal in the FREQUENCY MHz display.

h. Replace the A2 Assembly's internal cover and the Signal Generator's top cover.

i. Connect the line (mains) power cable to the Line Power Module and set the LINE switch to ON.

The Signal Generator's HP-IB address can also be set from the front panel. However, the FRONT PNL ENABLE switch on the HP-IB address switch must be set to "1". To change the address from the front panel, key in the desired address, press the STO key, then press the LOCAL key. Refer to Remote Operation, HP-IB, in Section III for additional information.

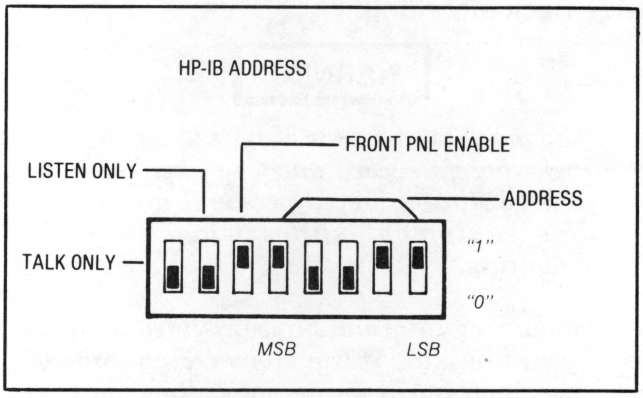

Figure 2-3. HP-IB Address Switch Shown as Set by the Factory

2-8. Interconnections

Interconnection data for the Hewlett-Packard Interface Bus is provided in Figure 2-4.

2-9. Mating Connectors

HP-IB Interface Connector. The HP-IB mating connector is shown in Figure 2-4.

AUX Interface Connector. The rear panel AUX control connector requires a male 14-pin Micro-

Mating Connectors (cont'd)

Ribbon (57 Series) connector. The HP part number is 1251-0142. This connector is also available from Amphenol (Oak Brook, Illinois 60521). Interconnection data for the rear panel AUX control connector is provided in Figure 2-5.

Coaxial Connectors. Coaxial mating connectors used with the Signal Generator should be 50Ω APC 3.5 female connectors.

2-10. Operating Environment

The operating environment should be within the following limitations:

Temperature ..... 0 to +55°C
Humidity .....<95% relative
Altitude.....<4570 metres (15 000 feet)

2-11. Bench Operation

The instrument cabinet has plastic feet and fold-away tilt stands for convenience in bench operation. (The plastic feet are shaped to ensure self-aligning of the instruments when stacked.) The tilt stands raise the front of the instrument for easier viewing of the front panel.

2-12. Rack Mounting

WARNING

The Signal Generator weighs 29 kg (64 lbs), therefore care must be exercised when lifting to avoid personal injury. Use equipment slides when rack mounting.

Rack mounting information is provided with the rack mounting kits. If the kits were not ordered with the instrument as options, they may be ordered through the nearest Hewlett-Packard office. Refer to the paragraph entitled Mechanical Options in Section I.

2-13. STORAGE AND SHIPMENT

2-14. Environment

The instrument should be stored in a clean, dry environment. The following environmental limitations apply to both storage and shipment:

Temperature ..... –55 to +75°C
Humidity .....<95% relative
Altitude..... 15 300 metres (50 000 feet)

2-15. Packaging

Tagging for Service. If the instrument is being returned to Hewlett-Packard for service, please complete one of the blue repair tags located at the back of this manual and attach it to the instrument.

Original Packaging. Containers and materials identical to those used in factory packaging are available through Hewlett-Packard offices. Mark the container "FRAGILE" to assure careful handling. In any correspondence refer to the instrument by model number and full serial number.

Other Packaging. The following general instructions should be used for re-packaging with commercially available materials:

a. Wrap the instrument in heavy paper or plastic. (If shipping to a Hewlett-Packard office or service center, complete one of the blue tags mentioned above and attach it to the instrument.)

b. Use a strong shipping container. A double-wall carton made of 2.4 MPa (350 psi) test material is adequate.

c. Use enough shock-absorbing material (75 to 100 mm layer; 3 to 4 inches) around all sides of the instrument to provide firm cushion and prevent movement in the container. Protect the front panel with cardboard.

d. Seal the shipping container securely.

e. Mark the shipping container "FRAGILE" to assure careful handling.

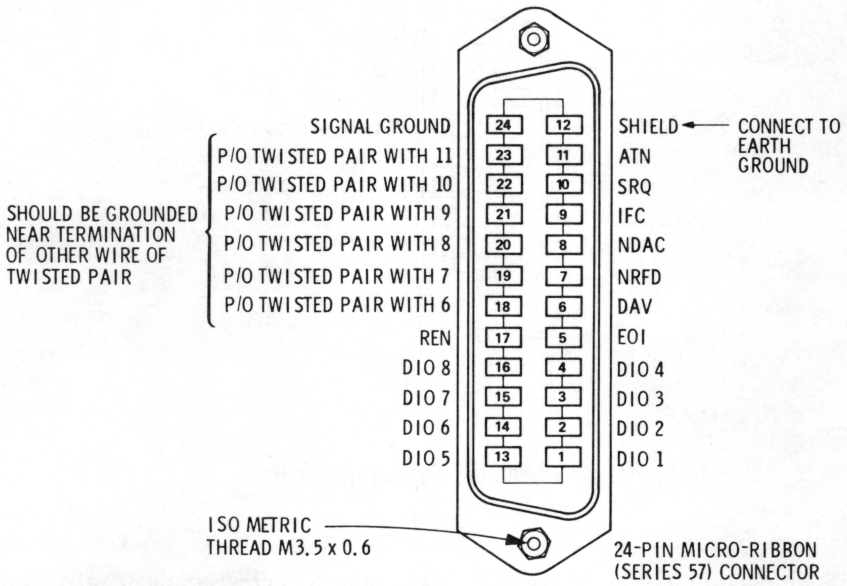

Logic Levels

The Hewlett-Packard Interface Bus Logic Levels are TTL compatible, i.e., the true (1) state is 0.0 Vdc to +0.4 Vdc and the false (0) state is +2.5 Vdc to +5.0 Vdc.

Programming and Output Data Format

Refer to Section III, Operation.

Mating Connector

HP 1251-0293; Amphenol 57-30240.

Mating Cables Available

HP 10833A, 1 metre (3.3 ft), HP 10833B, 2 metres (6.6 ft)
HP 10833C 4 metres (13.2 ft), HP 10833D, 0.5 metres (1.6 ft)

Cabling Restrictions

1. A Hewlett-Packard Interface Bus system may contain no more than 2 metres (6.6 ft) of connecting cable per instrument.

2. The maximum accumulative length of connecting cable for any Hewlett-Packard Interface Bus system is 20.0 metres (65.6 ft).

Figure 2-4. Hewlett-Packard Interface Bus Connection

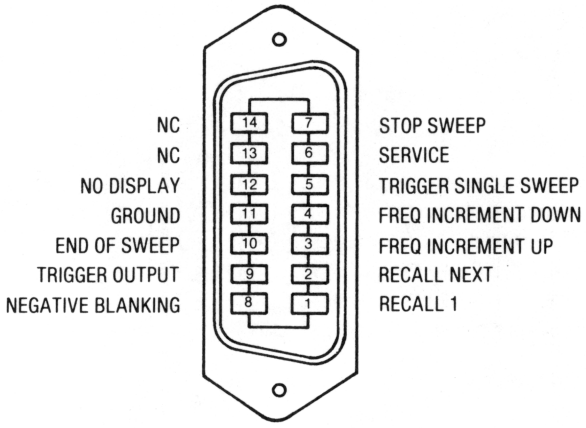

14-Pin Micro-Ribbon (57 Series) Connector

Logic Levels

The rear panel AUX connector logic levels are TTL compatible (5 microseconds negative-true TTL pulse or a contact closure to ground).

Internal Jumper Selection

If the signals to the rear panel AUX connector require contact debouncing (e.g., for mechanical switches), an internal jumper must be changed. The jumper is installed at the factory for electronically clean input signals (i.e., those signals that do not require the use of the debounce circuit). The jumper is located on the A2A2 Key-Code board. To change the jumper position, the top cover of the Signal Generator must be removed.

WARNINGS

This task should be performed by service trained persons who are aware of the potential shock hazard of working on an instrument with protective covers removed.

To avoid hazardous electrical shock, the line (mains) power cable should be disconnected before removing the Signal Generator's cover.

The following procedure describes how to locate and change the jumper position.

a. Set the LINE switch to STBY and disconnect the line power cable.

b. Remove the Signal Generator's top cover by removing the two plastic feet from the rear of the top cover and loosening the screw at the middle of the rear edge of the top cover.

c. Remove the A2A2 Key-Code board by gently lifting the board's extractors (the extractors are color-keyed red and black).

d. The jumper is located on the center of the board.

e. To enable the debounce circuit remove the jumper from W2 and reinstall the jumper at W1.

f. Reinstall the A2A2 Key-Code board and the Signal Generator's top cover.

Figure 2-5. AUX Interface Connector

SECTION III
OPERATION

3-1. INTRODUCTION

This section provides complete operating information for the Signal Generator. Included in this section are both general and detailed operating instructions, detailed descriptions of the front and rear panel, local and remote operator's checks, and operator's maintenance procedures.

3-2. Operating Characteristics

Table 3-1 briefly summarizes the major operating characteristics of the Signal Generator. This table is not intended to be an in-depth listing of all operations and ranges but gives a rough idea of the instrument's capabilities. For more information on the Signal Generator's capabilities, refer to Table 1-1, Specifications, and Table 1-2, Supplemental Characteristics. For information on HP-IB capabilities, refer to the summary contained in Table 3-4, Message Reference Table.

3-3. Local Operation

Information covering front panel operation of the Signal Generator is given in the sections described below. To rapidly learn the operation of the instrument, begin with Simplified Operation and Operator's Checks. Once familiar with the general operation of the instrument, use the Detailed Operating Instructions for in-depth and complete information about operating the Signal Generator.

Turn-On Information. Instructions relating to the Signal Generator's turn-on procedure are presented to acquaint the user with the general operation of the instrument.

Simplified Operation. The instructions located on the inside of this fold provide a quick introduction to front panel operation of the Signal Generator. These instructions are designed to rapidly acquaint the new user with basic operating procedures and therefore are not an exhaustive listing of all Signal Generator functions. However, an index to the Detailed Operating instructions appears opposite the fold to direct the operator to the more complete discussion of the topic of interest.

Detailed Operating Instructions. The Detailed Operating Instructions provide the complete operating reference for the Signal Generator user. The instructions are organized alphabetically by subject and are placed at the end of this section for easy reference. They are indexed by function in Table 3-2.

Panel Features. Front and rear panel features are described in detail in Figures 3-1 through 3-7.

Operating Information Pull-Out Card. The Operating Information pull-out card is a flexible plastic reference sheet located in a tray below the front panel. It presents general operating instructions. With examples of most of the Signal Generator's features, it is a good learning aid as well as a quick reference.

3-4. Remote Operation

HP-IB. The Signal Generator is capable of remote operation via the Hewlett-Packard Interface Bus (HP-IB). Instructions pertinent to HP-IB operation cover all considerations and instructions specific to remote operation including capabilities, addressing, input and output formats, the status byte, and service requests. At the end of the discussion is a complete summary of all codes.

In addition to the section described above, information concerning remote operation appears in several other locations. General information about HP-IB codes and formats appear on the Operating Information pull-out card. Numerous examples of program strings appear throughout the Detailed Operating Instructions described under Local Operation above.

Auxiliary. The following keyboard functions can be controlled by TTL signals at the rear panel AUX connector:

RECALL 1
FREQ INCREMENT (up and down)
SINGLE Sweep

In addition, several remote-only functions are available. These controls are described in detail in the paragraph titled Auxiliary Control.

Table 3-1. Operating Characteristics

Frequency	Range: 2.0 to 26.0 GHz Overrange: 1.95 to 26.5 GHz Resolution: 1 kHz 2.0 to 6.6 GHz 2 kHz 6.6 to 12.3 GHz 3 kHz 12.3 to 18.6 GHz 4 kHz 18.6 to 26.0 GHz
Output Level	Range: –90 to +10 dBm in 10 dB steps (except Options 001 and 005) 0 and +10 dBm (Options 001 and 005 only) Vernier: –10 to +3 dB continuously variable
Modulation	AM Depth: 30%/V and 100%/V ranges Maximum Input: 1 Vpk into 600 ohms nominal Rates (3 dB bandwidth): 20 Hz to 100 kHz FM Ranges: 30 kHz/V, 100 kHz/V, 300 kHz/V, 1 MHz/V, 3 MHz/V, and 10 MHz/V Maximum Input: 1 Vpk into 50 ohms nominal Maximum Peak Deviation: the smaller of 10 MHz or f_{mod} x 5 2.0 to 6.6 GHz f_{mod} x 10 6.6 to 12.3 GHz f_{mod} x 15 12.3 to 18.6 GHz f_{mod} x 20 18.6 to 26.0 GHz Rates (3 dB bandwidth): 100 Hz to 10 MHz for 30 kHz/V and 100 kHz/V ranges; 1 kHz to 10 MHz for 300 kHz/V, 1 MHz/V, 3 MHz/V, and 10 MHz/V ranges Pulse Pulse Input: Normal Mode: >3V on, <0.5V off Complement Mode: <0.5V on, >3V off Impedance: 50 ohms nominal RF Output: ON/OFF Ratio: >80 dB Rise and Fall Times: <35 ns Minimum Leveled Pulse Width: <100 ns Pulse Repetition Frequency: dc to 1 MHz
Sweep	Configuration: Start-Stop Frequencies or Center Frequency ΔF (Span) Modes: Automatic, Single, and Manual Step Size: as large as sweep span to as small as 1 kHz 2.0 to 6.6 GHz 2 kHz 6.6 to 12.3 GHz 3 kHz 12.3 to 18.6 GHz 4 kHz 18.6 to 26.0 GHz Number of Steps: 1 to 9999 Dwell Time: 1 to 255 ms per step Markers: 5 Markers Rear Panel BNC Sweep Connections: Sweep Out; Sweep Reference; Z-Axis Blanking/Markers; Tone Marker Output; Penlift

FRONT PANEL FEATURES

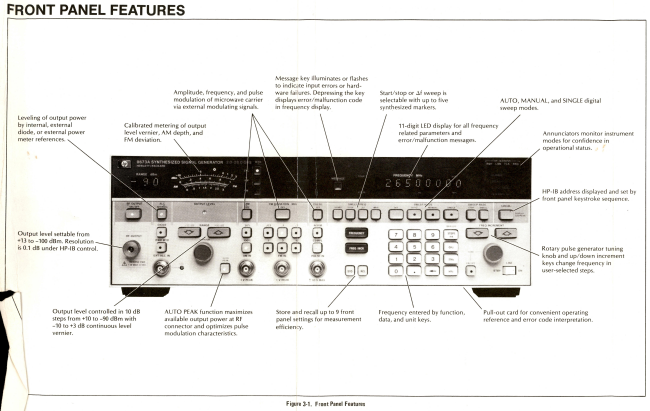

Figure 3-1. Front Panel Features

SIMPLIFIED OPERATION

PRESETTING FRONT PANEL

Press (RECALL) (0) to set the front panel to the following conditions:

RF OUTPUT to ON
ALC INTERNAL to ON
RANGE to −31 dBm (except Options 001 and 005:
RANGE to 0 dBm (for Options 001 and 005 only)
AUTO PEAK to ON
Meter Scale to LVL
AM, FM, and PULSE Modulation to OFF
FREQUENCY to 3000.000 MHz
FREQ INCR to 1.000 MHz
START to 2000.000 MHz
STOP to 4000.000 MHz
ΔF to 2000.000 MHz
MKRS to OFF (initialized to 5, 10, 15, 20, and 25 GHz)
SWEEP MODE to OFF
#STEP to 100 steps (20.000 MHz)
DWELL to 20 ms
TUNE Knob to ON

FREQUENCY

Frequency and frequency increment values are set in a Function-Data-Units format.

For example, to set frequency to 4.5 GHz and frequency increment to 500 MHz:

FUNCTION	DATA			UNITS
FREQUENCY	4	.	5	GHz
FREQ INCR	5	0	0	MHz

Frequencies may be entered in GHz, MHz, or kHz, but are always displayed in MHz.

To change the current frequency by the selected increment value, use:

FREQ INCREMENT ⟨ ⟩ ⟨ ⟩ or TUNE ↻ ENTER

SETTING OUTPUT LEVEL

The output level is set with the RANGE and VERNIER controls.

First press RANGE ⟨ ⟩ ⟨ ⟩

to step the output level down or up by increments of 10 dB. The selected range is shown in the RANGE dBm display.

Then, press METER (M) to select OUTPUT LEVEL VERNIER to be displayed on the meter. Adjust VERNIER between −10 and +3 dB, as read on the meter.

The output level is determined by adding the meter display to the RANGE dBm display.

To maintain output power at a constant level press ALC INTERNAL (A)

Press AUTO PEAK (P) to maximize power at the output frequency, to minimize power of spurious signals and to optimize pulse shape for pulse modulation.

STORE/RECALL

Up to nine front panel settings can be stored for later use. All Signal Generator front panel functions can be stored, although OUTPUT LEVEL VERNIER is stored in remote mode only.

(STO) (3) stores a front panel setting in register 3.

(RCL) (4) recalls a front panel setting stored in register 4 and changes the output of the Signal Generator to the recalled parameters.

MODULATION

Three types of modulation are available: amplitude (AM), frequency (FM), and pulse. Each type requires an external drive signal. Front panel keys select the maximum percent of AM, FM deviation in MHz, and normal (NORM) or complement (COMPL) pulse mode. For AM and FM, a 1 Vpk signal develops full scale modulation. Modulation varies linearly with the input signal. For pulse modulation, a TTL level positive-true pulse turns RF on in normal mode. A TTL level negative-true pulse turns RF on in complement mode.

MESSAGES

Entry errors, hardware malfunctions, and other significant conditions are indicated by the lighted MESSAGE key.

Press MESSAGE (?) to read the two-digit code in the FREQUENCY MHz display. The codes are explained in the Message Detailed Operating instruction and on the operating information pull-out card.

SWEEP

Values for SWEEP FREQ (START, STOP, ΔF, and MKR) and SWEEP RATE (STEP and DWELL) are entered in a Function-Data-Units format.

SWEEP FREQ

The SWEEP FREQ keys set the span of the sweep (that is, the range that the sweep covers). The sweep span can be set with either the START and STOP keys or with the FREQUENCY and Δ$F keys.

For example, to set a sweep span of 4 GHz with a start frequency of 2 GHz and a stop frequency of 6 GHz press:

FUNCTION	DATA	UNITS	FUNCTION	DATA	UNITS
START	2	GHz	FREQUENCY	4	GHz
STOP	6	GHz	Δ$F	4	GHz

SWEEP RATE

During a sweep, the Signal Generator changes frequency in discrete steps. Sweep rate is determined by the number of steps and the dwell time. The number of steps can be set in either of two ways.

To set the number of steps to be used in a sweep press STEP, use the numeric keys to enter the number of steps, then press ENTER (Hz)

The sweep span is divided by the number of steps to determine the step size.

To set the step size, press STEP, use the numeric keys to enter the frequency of the step, then press (GHz) or (MHz) or (kHz).

The sweep span is divided by the step size to determine the number of steps.

The dwell time determines how much time elapses before the next frequency step is taken.

To set the dwell time press SWEEP (DWELL), use the numeric keys to enter the time in milliseconds, then press ENTER (ms)

SWEEP MODE

To start a sweep press:

AUTO (↑) for a repetitive sweep.

MANUAL (↕) for a sweep that is controlled by the TUNE knob or the FREQ INCREMENT Up and Down keys.

SINGLE (↑) for one sweep only. Press this key once to tune the Signal Generator to the start frequency. Then, press this key again to actually initiate the sweep.

To stop a sweep, in any mode, press RF (RF)

3-5. Operator's Checks

Operator's Checks are procedures designed to verify the proper operation of the Signal Generator's main functions. Two procedures are provided as described below.

Basic Functional Checks. This procedure requires a function generator, a microwave frequency counter, a power meter, a power sensor, a crystal detector, and interconnecting cables. It assures that most front panel controlled functions are being properly executed by the Signal Generator.

HP-IB Functional Checks. These procedures require an HP-IB compatible computing controller, an HP-IB interface, and connecting cable. The procedures check all of the applicable bus messages summarized in Table 3-4. The HP-IB Checks assume that front panel operation has been verified by performing the Basic Functional Checks.

3-6. Operator's Maintenance

WARNING

For continued protection against fire hazard, replace the line fuse with a 250V fuse of the same rating only. Do not use repaired fuses or short-circuited fuseholders.

Operator's maintenance consists of replacing defective fuses and adjusting the mechanical zero of the front panel meter.

The primary power fuse is located within the Line Power Module Assembly. Refer to Figure 2-1 for instructions on how to change the fuse.

To mechanically zero the front panel meter, set the LINE switch to the STBY position and place the Signal Generator in its normal operating position. Turn the mechanical zeroing adjustment clockwise to move the needle up scale or counterclockwise to move the needle down scale. The zero point is located at the left end of the 0—1 or the 0—3 scales. DO NOT zero on the left end of the top dB scale at −10 because this is not the proper zeroing point.

If the instrument does not operate properly and is being returned to Hewlett-Packard for service, please complete one of the blue tags located at the end of this manual and attach it to the instrument. Refer to Section II for packaging instructions.

3-7. TURN-ON INSTRUCTIONS

WARNINGS

Before the instrument is switched on, all protective earth terminals, extension cords, autotransformers and devices connected to it should be connected to a protective earth grounded socket. Any interruption of the protective earth grounding will cause a potential shock hazard that could result in personal injury.

Only 250V normal blow fuses with the required rated current should be used. Do not use repaired fuses or short circuited fuseholders. To do so could cause a shock or fire hazard.

CAUTIONS

Before the instrument is switched on, it must be set to the voltage of the power source or damage to the instrument may result.

The Signal Generator's RF OUTPUT is protected against reverse power applications up to 1W. However, for greatest protection of expensive internal components, be careful not to apply any reverse power to the RF OUTPUT.

3-8. Turn-On

Turn-On Procedure. The Signal Generator has a standby state and an on state. Whenever the power cable is plugged in, an oven is energized to keep the reference oscillator at a stable operating temperature. If the Signal Generator is already plugged in, set the LINE switch to ON.

If the power cable is not plugged in, follow these instructions.

On the rear panel:

1. Check the line voltage switch for correct voltage selection.
2. Check that the fuse rating is appropriate for the line voltage used (see Figure 2-1). Fuse ratings are printed on the rear panel.
3. Plug in the power cable.

On the front panel, set the LINE switch to ON.

NOTE

The OVEN COLD status annunciator should light to indicate that the Signal Generator requires warming up. The annunciator should turn off within five minutes and the Signal Generator should be ready for general use.

Turn-On Configuration. The Signal Generator turns on to the same control settings it had before it was switched to STBY or even completely off (that is, if line power was removed). The exception to this rule is that it always turns on in local mode.

Turn-On Memory Check. The Signal Generator performs a quick memory check at turn-on. It checks for a failure in ROM (permanent memory) or in RAM (temporary memory), and for the presence of correct data stored in RAM.

NOTE

An internal battery is used to retain data in RAM during standby and off periods. The data restores the last control setup and the nine storage registers.

If a ROM or serious RAM failure occurs, the Signal Generator will attempt to turn on to its last control setup. The Signal Generator might be useable but does require service.

If any, but not all, of the stored data is found to be incorrect, the Signal Generator will turn on to the configuration stored in the first good register. This control setup will then be stored in registers 1 through 9. Incorrect stored data could be caused by even a single bit of data being lost due to line transients, noise or other unpredictable conditions. The Signal Generator should be useable and does not require service unless this situation occurs repeatedly.

If all of the register data has been altered (for example, if the battery failed) the Signal Generator will reinitialize to the front panel preset values stored in register 0 (refer to Simplified Operation for a list of preset values). The initialized control setup will then be stored in all of the registers. The Signal Generator might be useable but does require service.

3-9. Frequency Standard Selection

A FREQ STANDARD INT/EXT switch and two connectors are located on the rear panel. A jumper

Frequency Standard Selection (cont'd)
normally connects the FREQ STANDARD INT connector (A3J9) to the FREQ STANDARD EXT connector (A3J10). The FREQ STANDARD EXT connector can accept a reference signal to be used instead of the Signal Generator's internal frequency standards.

The internal frequency standard is a 10.000 MHz signal at +7 dBm (nominal) with an aging rate of $<5 \times 10^{-10}$/day after warmup (typically 24 hours). When the FREQ STANDARD INT/EXT switch is in the INT position and the jumper is connected between A3J9 and A3J10, the internal reference is enabled.

When the FREQ STANDARD INT/EXT switch is in the EXT position and the jumper is disconnected from the FREQ STANDARD EXT connector, a frequency standard of 5 or 10 MHz at 0 dBm (nominal) can be connected.

NOTE

The EXTERNAL REF status annunciator on the front panel will light when an external reference is being used. Also, the NOT ϕ LOCKED status annunciator may light if the external reference is not of sufficient accuracy in frequency or has an insufficient power level. The external reference must be within ±200 Hz of 10 MHz or ±100 Hz of 5 MHz for reliable locking to occur. If the external reference level is not within the specified limits (0.1 to 1 Vrms into 50 ohms), its level may be sufficient to turn off the NOT ϕ LOCKED status annunciator. However, the phase noise of the Signal Generator may be degraded.

Table 3-2. Index of Detailed Operating Instructions

This table is reserved for the final manual.

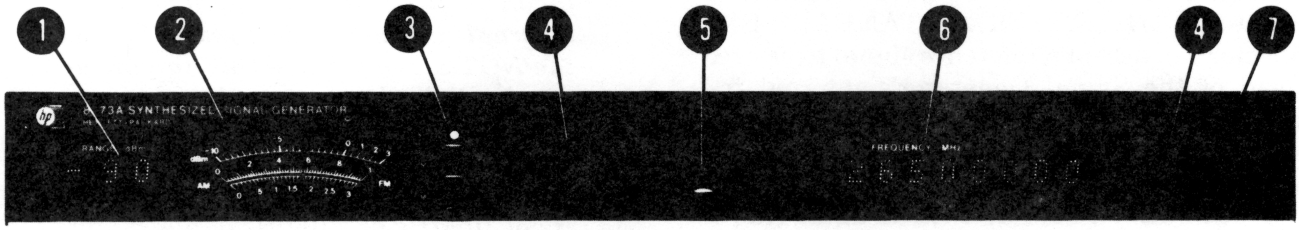

1. RANGE dBm Display. Indicates the selected range of the RF output in 10 dB steps from −90 to +10 dBm. Range is set by the RANGE (Down and Up) keys.

2. Meter. Monitors power level, AM depth, or FM deviation. The meter function is selected by the MTR keys.

3. MTR Keys. Select the meter function.

   LVL: selects OUTPUT LEVEL VERNIER for −10 to +3 dB scale indication. Read relative to the RANGE dBm display.

   AM: selects 30% (read on the 0 to 3 scale) or 100% (read on the 0 to 1 scale) AM depth, full scale. A 1 volt peak signal applied to the AM IN connector develops full scale modulation.

   FM: selects FM deviation. Full scale indication read on the 0 to 3 scale is 30 kHz, 300 kHz, or 3 MHz. Full scale indication read on the 0 to 1 scale is 100 kHz, 1 MHz, or 10 MHz. A 1 volt peak signal applied to the FM IN connector develops full scale modulation.

4. Status Annunciators. Display the internal conditions of the Signal Generator.

   ALC UNLEVELED: lights when RF OUTPUT is turned off; more power is requested than is available; no signal is applied to EXT ALC IN when PWR MTR or DIODE is selected; no signal is applied to PULSE IN when NORM pulse mode is selected; overmodulation occurs in AM mode; or pulse width is less than 100 ns.

   NOT PHASE LOCKED: lights when one or more of the phase lock loops is unlocked, the RF OUTPUT is OFF, or the INT-EXT switch is in the EXT position but an external reference is not connected.

Figure 3-2. Displays and Status Annunciators (1 of 2)

FM OVERMOD: lights when the signal applied to the FM IN connector exceeds 1 volt peak or when the modulation index exceeds 5 (2.0 to 6.6 GHz), 10 (6.6 to 12.3 GHz), 15 (12.3 to 18.6 GHz), or 20 (18.6 to 26.0 GHz). The modulation index is equal to the maximum peak deviation divided by fmod. Refer to Table 1-1, Specifications, for additional information.

STANDBY: lights when power is applied but the LINE switch is in the STBY position.

OVEN COLD: lights when the crystal oven in not up to nominal operating temperature.

OUT OF RANGE: lights only in sweep mode when a combination of ΔF and FREQUENCY would cause the sweep frequency to be out of range.

EXTERNAL REF: lights when the rear panel INT-EXT switch is in the EXT position.

5. MESSAGE Key. Lights to indicate entry errors and flashes to indicate hardware malfunctions. A two-digit code appears in the FREQUENCY MHz display when this key is pressed. Refer to the pull-out card for an explanation of the codes.

6. FREQUENCY MHz Display. Normally indicates output frequency. Message codes and previously set values for FREQ INCR, SWEEP FREQ, and SWEEP RATE functions are displayed for as long as their respective keys are depressed.

7. HP-IB STATUS Annunciators. Indicate the status of the Signal Generator when it is operating via the HP-IB.

RMT: lights when the Signal Generator is in remote mode.

LSN: lights when the Signal Generator is addressed to listen.

TLK: lights when the Signal Generator is addressed to talk.

SRQ: lights when the Signal Generator is issuing the Require Service message.

Figure 3-2. Displays and Status Annunciators (2 of 2)

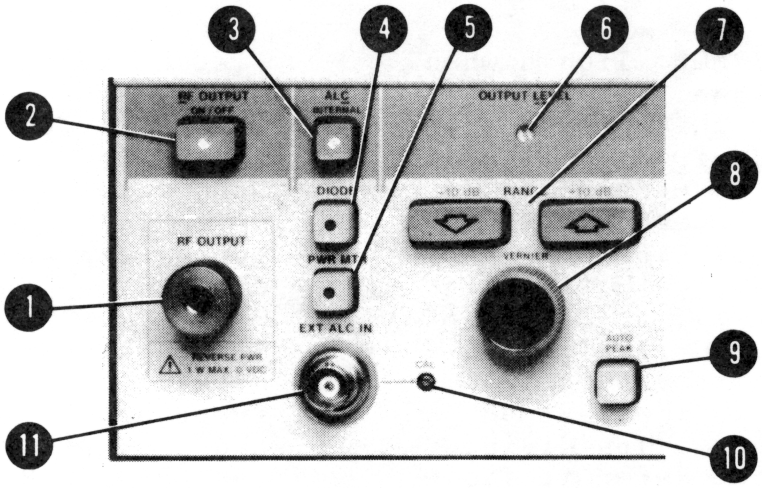

1. RF OUTPUT Connector. 50 ohm APC 3.5 male connector supplies RF output over the entire frequency range of 2 to 26 GHz.

2. RF OUTPUT ON/OFF Key. Completely turns off the RF output when set to OFF. Setting the RF output to OFF causes the NOT PHASE LOCKED and ALC UNLEVELED status annunciators to light. When the RF OUTPUT is set to ON, the Signal Generator returns to normal operation.

3. INTERNAL Key. Selects internal circuitry for leveling the output power at the front panel RF OUTPUT connector.

4. DIODE Key. Selects external leveling mode for leveling power using an external diode detector. The output of the diode is connected to the EXT ALC IN connector.

5. PWR MTR Key. Selects external leveling mode for leveling power using an external power meter. The output of the power meter is connected to the EXT ALC IN connector.

6. Mechanical Meter Zero. Sets meter suspension so that the meter indicates zero when power is removed from the Signal Generator and the Signal Generator is in its normal operating position.

7. OUTPUT LEVEL RANGE Keys (Down and Up). Select the RF output level range in 10 dB steps from −90 to +10 dBm. The selected range is displayed in the RANGE dBm display.

8. OUTPUT LEVEL VERNIER. Adjusts the RF output level over the range of −10 to +3 dB, relative to the LVL range as read on the meter.

9. AUTO PEAK Key. Maximizes power at the output frequency and optimizes pulse shape for pulse modulation.

Figure 3-3. Output Level Features (1 of 2)

10. CAL Control. Adjusts the power level at the load when using a diode detector or power meter for external leveling.

11. EXT ALC IN Connector. BNC female connector with high input impedance (approximately 50 kilohms). Accepts positive or negative leveling signals from either a diode detector or power meter.

Figure 3-3. Output Level Features (2 of 2)

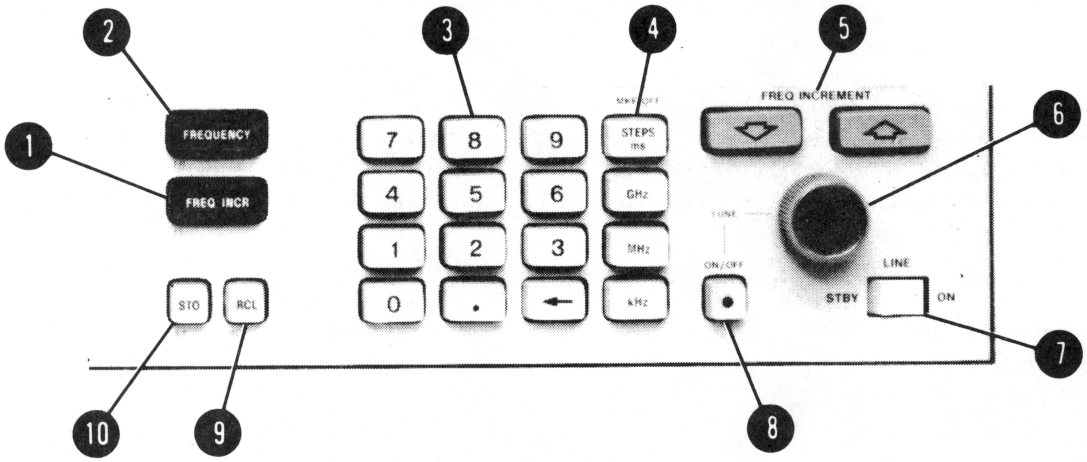

1. FREQ INCR Key. Used as a prefix to the Data and Units keys to set the step size for the FREQ INCREMENT Down and Up keys or the TUNE knob. Pressing the FREQ INCR key recalls the current increment value to the FREQUENCY MHz display (for as long as the key is depressed).

2. FREQUENCY Key. Used as a prefix to the Data and Units keys to set a continuous wave frequency or center frequency for ΔF sweep.

3. Data Keys (0 - 9, ., and backspace). Used with Function keys (that is, FREQUENCY, FREQ INCR, and sweep function keys) and Units keys to set value-selectable parameters. Data keys 1 - 9 are also used with STO and RCL to identify the storage register.

   The backspace key clears one digit at a time starting with the least significant digit. It is used only during Data entry and before any Units key is pressed.

4. Units Keys (MKR OFF/STEPS/ms, GHz, MHz, and kHz). Used as a suffix to Function and Data keys to set value-selectable parameters. Frequency entries can terminate in GHz, MHz, or kHz but they are always displayed in MHz.

   The MKR OFF/STEPS/ms key serves as a terminator for setting the number of steps in a sweep, the dwell time in ms, or as a means of turning off markers. The selected function automatically determines the applicable terminator.

5. FREQ INCREMENT Down and Up Keys. Increase or decrease the CW frequency in steps; the step size is set with the FREQ INCR key. Holding either key down causes the frequency to continuously change. These keys also serve as a manual sweep mode control.

6. TUNE Knob. Changes the CW frequency by the value of the FREQ INCR. The knob is normally disabled and must

Figure 3-4. Frequency Control Features and Line Switch (1 of 2)

be enabled by the ON/OFF key. The knob also serves as a manual sweep mode control.

7. LINE Switch. Applies power to the Signal Generator when set to the ON position. Power is supplied to the crystal oven and the battery charger circuit in the STBY and ON positions.

8. TUNE ON/OFF Key. Enables the TUNE knob when ON; disables TUNE knob when OFF. The key LED lights when it is ON.

9. RCL Key. Used as a prefix to a numeric key (a single digit 0 - 9 to identify the storage register) to recall the contents saved in that register. The instrument configuration changes to the recalled parameter values.

   RCL 0 is used to preset the front panel. Refer to Simplified Operation in this section for a list of preset conditions.

10. STO Key. Used as a prefix to a numeric key (a single digit 1 - 9 to identify the storage register) to save the current instrument configuration in an internal storage register. All front panel functions can be stored, although OUTPUT LEVEL VERNIER can be stored only in remote mode.

Figure 3-4. Frequency Control Features and Line Switch (2 of 2)

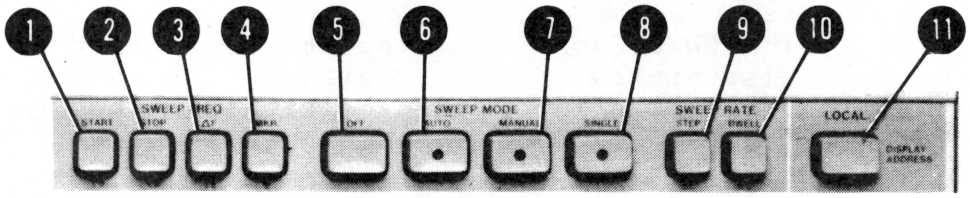

SWEEP FREQ

1. START Key. Used as a prefix to the Data and Units keys to set the beginning frequency of a sweep. Pressing this key displays the present START value in the FREQUENCY MHz display (for as long as the key is depressed).

2. STOP Key. Used as a prefix to the Data and Units keys to set the ending frequency of a sweep. Pressing this key displays the present STOP value in the FREQUENCY MHz display (for as long as the key is depressed).

3. ΔF Key. Used as a prefix to the Data and Units keys to set sweep span. Pressing this key displays the present span value in the FREQUENCY MHz display (for as long as the key is depressed). Center frequency of the span is set with the FREQUENCY key.

4. MKR Key. Enables previously selected marker frequencies when used as a prefix to Data keys 1 through 5. For example, MKR and 1 enables Marker 1. When used as a prefix to the Data and Units keys, it sets marker frequencies. For example, MKR, 3, 15, and GHz sets the frequency of Marker 3 to 15 GHz. (The first digit pressed after the MKR key is always the marker number.) Pressing the MKR key displays all currently enabled marker numbers within the set sweep range in the FREQUENCY MHz display. Pressing the MKR key and a Data key displays the present frequency of the requested marker.

SWEEP MODE

5. OFF Key. Disables the sweep.

6. AUTO Key. Starts a repetitive sweep (restarting at the end of each sweep).

7. MANUAL Key. Enables the sweep circuitry. It does not start a sweep. The TUNE knob (if enabled) or the FREQ INCREMENT (Down and Up) keys control the sweep.

8. SINGLE Key. Arms the trigger for single sweep and tunes the Signal Generator to the start frequency. The sweep does not begin until the key is pressed again to trigger the sweep. When pressed during a sweep, the in-progress sweep aborts and rearms the trigger.

Figure 3-5. Sweep Features and LOCAL Key (1 of 2)

SWEEP RATE

9. STEP Key. Used as a prefix to the Data and Units keys to set the number of steps or the size of each step of a sweep. When the entry is terminated by STEPS, the number of steps is set. When the entry is terminated by GHz, MHz, or kHz, the step size is set. When this key is pressed, the number of steps is displayed on the left side of the FREQUENCY MHz display and the step size is displayed on the right side. The maximum number of steps allowed is 9999.

10. DWELL Key. Used as a prefix to the Data and ms keys to set the time interval between sweep steps. Pressing this key displays the present dwell time value in the FREQUENCY MHz display (for as long as the key is depressed). The allowable values for dwell time range from 1 to 255 ms.

11. LOCAL/DISPLAY ADDRESS Key. Returns the Signal Generator to local keyboard control from HP-IB (remote) control provided the instrument is not in local lockout. Also displays the current HP-IB address in the FREQUENCY MHz display for as long as the key is

Figure 3-5. Sweep Features and LOCAL Key (2 of 2)

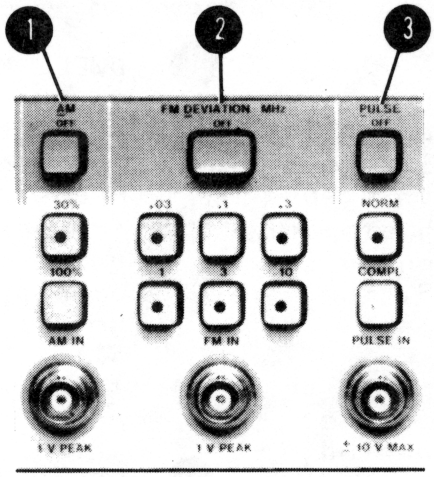

1. AM

AM OFF Key: Disables AM.

AM 30% Key: Enables AM and selects 30% full scale modulation for 1 volt peak applied to the AM IN connector.

AM 100% Key: Enables AM and selects 100% full scale modulation for 1 volt peak applied to the AM input connector.

AM IN Connector: BNC female connector with an input impedance of 600 ohms. 1 volt peak sets full scale modulation as selected by the AM 30% or 100% key. AM depth varies linearly with the input signal level.

2. FM DEVIATION

FM DEVIATION MHz OFF Key: Disables FM.

FM DEVIATION Keys (.03, .1, .3, 1, 3, and 10): Enables FM and selects the peak deviation sensitivity in MHz obtained when a signal is applied to the FM IN connector. The peak deviation is read on the meter.

FM IN Connector: BNC female connector with an input impedance of 50 ohms. 1 volt peak gives full scale modulation. Deviation varies linearly with the input signal level. Deviation ranges are controlled by the FM DEVIATION keys.

3. PULSE

PULSE OFF Key: Disables pulse modulation.

NORM (Normal Mode) Key: Triggers RF output on when the signal to the PULSE IN connector is greater than 2.4 volts.

COMP (Complement Mode) Key: Triggers RF output on when the signal to the PULSE IN connnector is less than 0.4 volts.

PULSE IN Connector: BNC female connnector with an input impedance of 50 ohms. Accepts TTL levels.

Figure 3-6. Modulation Features

PEN LIFT. BNC female connector. TTL-high lifts pen; TTL-low lowers pen. 100 ms delay to lift or lower pen in single sweep mode.

TONE MKR. BNC female connector. Output impedance is 600Ω nominal, 5 kHz sine wave. Can be connected to front panel AM IN to provide AM markers.

SWP OUT. BNC female connector. Output impedance is 100Ω nominal. Provides a 0 to +10V ramp from start to stop. An internal adjustment can set the slope of the ramp from 0 to between +4 and +12V.

FREQ REF. BNC female connector. Output impedance is 100Ω nominal. Provides a 1V/GHz ramp (+18V maximum) that is always on, even when sweep is off.

RF OUT (A3J6). For Options 004 and 005 only, 50Ω type N female output connector.

FREQ STANDARD Output (A3J9). 10.000 MHz into 50 ohms at +7 dBm (nominal) from the internal frequency standard except when INT/EXT switch is in the EXT position.

Jumper (A3W3). Normally connects the Internal Frequency Standard Output (A3J9) to the External Frequency Standard Input (A3J10).

FREQ STANDARD Input (A3J10). Normally connected by A3W3 to A3J9. Also used to connect an external frequency standard of 5 or 10 MHz at 0 dBm to the Signal Generator.

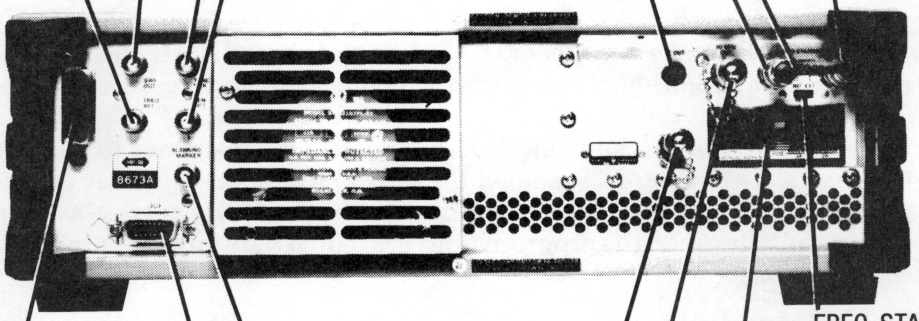

HP-IB CONNECTOR. Connects the Signal Generator to the Hewlett-Packard Interface Bus for remote operation.

AUX Connector. Allows remote control of frequency increment, display blanking, register recall, and start and stop sweep. Refer to Table 3-3, AUX Connector Functions, for additional information.

BLANKING/MARKER. BNC female connector. Output impedance is 100Ω nominal. Provides +5V at the beginning of each frequency change for blanking a swept display (to eliminate display of switching transients). Goes to -5V during remainder of frequency step for Z-Axis intensity marker or to 0V for non-marker frequencies.

FREQ STANDARD INT/EXT Switch. Normally left in the INT position. Removes power from internal frequency standard when in the EXT position.

Line Power Module. Permits operation from 100, 120, 220, or 240 Vac. The number visible in the window displays the nominal line (mains) voltage for which the Signal Generator is set (see Figure 2-1). The protective grounding conductor connects to the Signal Generator through this module. The line power fuse is part of this module and is the only part to be changed by the operator.

100 MHz OUT (A3J7). 0 dBm (nominal) into 50 ohms, can be used as an external timebase and for troubleshooting.

10 MHz OUT (A3J8). 0 dBm (nominal) into 50 ohms, can be used as an external timebase and for troubleshooting.

Figure 3-7. Rear Panel Features

OPERATOR'S CHECKS

3-10. HP-IB FUNCTIONAL CHECKS

DESCRIPTION: These procedures check the Signal Generator's ability to process or send the HP-IB messages described in Table 3-4. Only the Signal Generator, a controller, and an HP-IB interface are needed to perform these checks.

These procedures do not check if all Signal Generator program codes are being properly interpreted and executed by the instrument. However, if the power-up sequence (including the memory checks) and the front panel operation is good, the program codes, in all likelihood, will be correctly implemented.

The validity of these checks is based on the following assumptions:

a. The Signal Generator performs properly when operated via the front panel keys (that is, in local mode). This can be verified by the Basic Functional Checks.

b. The bus controller properly executes HP-IB operations.

c. The bus controller's HP-IB interface properly executes the HP-IB operations.

If the Signal Generator appears to fail any of these HP-IB checks, the validity of the above assumptions should be confirmed before attempting to service the instrument.

The select code of the controller's HP-IB interface is assumed to be "7". The address of the Signal Generator is assumed to be "19" (its address as set at the factory). This particular select code address combination (that is, 719) is not necessary for these checks to be valid. However, the program lines presented here have to be modified for any other combination.

These checks can be performed together or separately. Any special requirements for a check are described at the beginning of the check.

INITIAL SETUP: The test setup is the same for all of the checks. Connect the Signal Generator to the bus controller via the HP-IB interface.

EQUIPMENT:

HP IB Controller	HP 9825A/98213A (General and Extended I/O ROM) —or— HP 85F/82903A (16K Memory Module)/00085-15005 (Advanced Programming ROM)
HP-IB Interface	HP 98034A (for HP 9825A) HP 82937A (for HP 85F)

Remote and Local Messages and the LOCAL Key

NOTE: This check determines if the Signal Generator properly switches from local to remote control, from remote to local control, and if the LOCAL key returns the instrument to local control. If the Signal Generator is in remote mode (that is, the front panel RMT annunciator is on), switch the instrument to STBY, then to ON.

OPERATOR'S CHECKS

HP-IB Functional Checks (cont'd)

Description	HP 9825A (HPL)	HP 85F (BASIC)
Send the Remote message (by setting Remote Enable, REN, true and addressing the Signal Generator to listen).	rem 719	REMOTE 719

OPERATOR'S RESPONSE: Check that the Signal Generator's RMT and LSN annunciators are on.

Send the Local message to the Signal Generator.	lcl 719	LOCAL 719

OPERATOR'S RESPONSE: Check that the Signal Generator's RMT annunciator is off but its LSN annunciator is on.

Send the Remote message to the Signal Generator.	rem 719	REMOTE 719

OPERATOR'S RESPONSE: Check that both the Signal Generator's RMT and LSN annunciators are on. Press the LOCAL key on the Signal Generator. Check that the Signal Generator's RMT annunciator is now off, but that its LSN annunciator remains on.

Sending the Data Message

NOTE: This check determines if the Signal Generator properly issues Data messages when addressed to talk. Before beginning this check, turn the Signal Generator's LINE switch to STBY, then to ON. Then key in RCL 0 to preset the front panel.

Description	HP 9825A (HPL)	HP 85F (BASIC)
Address the Signal Generator to talk and store its output in variable V.	red 719, V	ENTER 719; V
Display the value of V.	dsp V	PRINT V

OPERATOR'S RESPONSE: Check that the Signal Generator's TLK annunciator is on. The controller's display should read 3000000000.00 (HP 9825A) or 3000000000 (HP 85F). This corresponds to the data output shown in the FREQUENCY MHz display.

OPERATOR'S CHECKS

HP-IB Functional Checks (cont'd)

Receiving the Data Message

NOTE: This check determines if the Signal Generator properly receives Data messages.

Description	HP 9825A (HPL)	HP 85F (BASIC)
Send the first part of the Remote message (enabling the Signal Generator to remote).	rem 7	REMOTE 7
Address the Signal Generator to listen (completing the Remote message), then send a Data message.	wrt 719, "fr15gz"	OUTPUT 719; "FR15GZ"

OPERATOR'S RESPONSE: Check that both the Signal Generator's RMT and LSN annunciators are on and that the FREQUENCY MHz display shows 15000.000 MHz.

Local Lockout and Clear Lockout/Set Local Messages

NOTE: This check determines if the Signal Generator properly receives the Local Lockout message, disabling the LOCAL key. The check also determines if the Clear Lockout/Set Local message is properly received and executed by the Signal Generator. This check assumes that the Signal Generator is in the remote mode.

Description	HP 9825A (HPL)	HP 85F (BASIC)
Send the Local Lockout message.	llo 7	LOCAL LOCKOUT 7

OPERATOR'S RESPONSE: Check that the Signal Generator's RMT annunciator is on. Press the Signal Generator's LOCAL key. The RMT annunciator should remain on.

Send the Clear Lockout/Set Local	lcl 7	LOCAL 7

OPERATOR'S RESPONSE: Check that the Signal Generator's RMT annunciator is off.

Return the Signal Generator to remote mode if the remaining checks in this section are to be performed.	rem 719	REMOTE 719

OPERATOR'S RESPONSE: Check that the Signal Generator's RMT annunciator is on.

OPERATOR'S CHECKS

HP-IB Functional Checks (cont'd)

Clear Message

NOTE: This check determines if the Signal Generator properly responds to the Clear message. This check assumes that the Signal Generator is in the remote mode.

Description	HP 9825A (HPL)	HP 85F (BASIC)
Send a Data message that turns AUTO PEAK off.	wrt 719, "k0"	OUTPUT 719; "K0"

OPERATOR'S RESPONSE: Check that the Signal Generator's AUTO PEAK key light is off.

Send the Clear message (turning the Signal Generator's AUTO PEAK function on).	clr 719	CLEAR 719

OPERATOR'S RESPONSE: Check that the Signal Generator's AUTO PEAK key light is on.

Abort Message

NOTE: This check determines if the Signal Generator becomes unaddressed when it receives the Abort message. This check assumes that the Signal Generator is in the remote mode.

Description	HP 9825A (HPL)	HP 85F (BASIC)
Address the Signal Generator to listen.	wrt 719	OUTPUT 719

OPERATOR'S RESPONSE: Check that the Signal Generator's LSN annunciator is on.

Send the Abort message, unaddressing the Signal Generator from listening.	cli 7	ABORTIO 7

OPERATOR'S RESPONSE: Check that the Signal Generator's LSN annunciator is off.

OPERATOR'S CHECKS

HP-IB Functional Checks (cont'd)

Status Byte Message

NOTE: This check determines if the Signal Generator sends the Status Byte message. Before beginning this check, turn the Signal Generator's LINE switch to STBY, then to ON.

Description	HP 9825A (HPL)	HP 85F (BASIC)
Place the Signal Generator in serial-poll mode (causing it to send the Status Byte message).	rds (719) →V	V=SPOLL (719)
Display the value of V.	dsp V	PRINT V

OPERATOR'S RESPONSE: The controller's display should read 12.00 (HP 9825A) or 12 (HP 85F).

Require Service Message

NOTE: This check determines if the Signal Generator can issue the Require Service message (set the SRQ bus control line true). This check can be performed in either local or remote mode.

Description	HP 9825A (HPL)	HP 85F (BASIC)
Send a Data message to set the Request Mask to 32.	wtb 719, "@1", 32	OUTPUT 719 USING "2A, B"; "@1", 32
Send a Data message containing an invalid HP-IB code. This causes a Require Service message to be sent.	wrt 719, "fr 35 gz"	OUTPUT 719; "FR 35 GZ"

OPERATOR'S RESPONSE: Check that the SRQ annunciator is on.

Read the binary status of the controller's HP-IB interface and store the data in variable V (in this step, 7 is the interface's select code).	rds (7) →V	STATUS 7, 2;V
Display the value of the SRQ bit (in this step 7 is the SRQ bit for the HP 9825A and 5 is the SRQ bit for the HP 85F, numbered from 0).	dsp"SRQ=", bit(7,V)	PRINT"SRQ="; BIT(V,5)

OPERATOR'S RESPONSE: Check that the SRQ value is 1, indicating the Signal Generator issued the Require Service message.

OPERATOR'S CHECKS

HP-IB Functional Checks (cont'd)

Status Bit Message

NOTE: This check determines whether or not the Signal Generator sends the Status Bit message. This check can be performed in either local or remote mode. If the Signal Generator's SRQ annunciator is off, perform the first part of the Require Service Message check before beginning this check.

Description	HP 9825A (HPL)	HP 85F (BASIC)
Configure the Signal Generator to respond to a parallel poll on HP-IB data line DI03.	polc 719, 10	SEND 7; LISTEN 19 CMD 5 SCG 10
Place the Signal Generator in parallel poll mode (causing it to send the Status Bit message) and store the result in variable V.	pol(7) →V	V = PPOLL (7)
Display the value of V.	dsp V	PRINT V

OPERATOR'S RESPONSE: Check that the SRQ annunciator is on and that the response to the parallel poll is 4, indicating that the Signal Generator issued the Status Bit message.

Unconfigure the Signal Generator from responding to a parallel poll.	polu 719	SEND 7; LISTEN 19 CMD 5 SCG 18
Place the Signal Generator in parallel poll mode.	pol(7) →V	V = PPOLL (7)
Display the value of V.	dsp V	PRINT V

OPERATOR'S RESPONSE: Check that the SRQ annunciator is on and that the response to the parallel poll is 0, indicating that the Signal Generator is no longer configured to respond to a parallel poll. Then, turn the LINE switch to STBY, then to ON, to turn the SRQ annunciator off.

OPERATOR'S CHECKS

HP-IB Functional Checks (cont'd)

Trigger Message

NOTE: This check determines if the Signal Generator responds to the Trigger message. This check assumes that the Signal Generator is in remote mode.

Description	HP 9825A (HPL)	HP 85F (BASIC)
Send a Data message to set the Signal Generator's frequency to 9999 MHz.	wrt 719, "fr 9999 mz"	OUTPUT 719; "FR 9999 MZ"
Set the Signal Generator's frequency increment to 1111 MHz.	wrt 719, "fi 1111 mz"	OUTPUT 719; "FI 1111 MZ"

OPERATOR'S RESPONSE: Check that the Signal Generator's frequency is set to 9999 MHz. Then press the Signal Generator's FREQ INCR key to check for an increment of 1111 MHz. This keyboard function is possible in the remote state (even if local lockout is enabled).

Configure the Signal Generator's trigger response to be an INCREMENT (down) function (that is, dn).	wrt 719, "ct dn"	OUTPUT 719; "CT DN"
Send a Trigger message.	trg 719	TRIGGER 719

OPERATOR'S RESPONSE: Check that the Signal Generator's frequency changes to 8888 MHz.

3-11. REMOTE OPERATION, AUXILIARY CONTROL

3-12. AUX Input Lines

A limited number of instrument functions can be controlled through the rear panel AUX connector. These functions are listed in the table below.

The input lines are TTL compatible and negative-edge sensitive. They require a minimum of 5 μs between negative edges. Input signals can be generated by clean TTL drivers or by mechanical switches that require debouncing. The Signal Generator has a built-in debouncing circuit that should be enabled or bypassed depending upon which type of driver is used.

The Signal Generator is shipped from the factory configured for electrically-clean control signals (that is, the internal debouncing circuit is bypassed). One way to determine if the debouncing circuit is bypassed is described below.

- Set FREQ INCR to 1 GHz.
- Ground pin 3 (FREQ INCREMENT Up) several times and observe the change in frequency.
- If the FREQ INCREMENT steps are erratic, the debouncing circuit is still bypassed.
- If the frequency consistently changes in steps of 1 GHz, the debouncing circuit is enabled.

Refer to Section II, Installation, for the procedure for enabling or bypassing the debouncing circuit.

NOTE

Section II, Installation, also shows the pinout configuration of the AUX connector as well as information for a recommended mating connector.

3-13. AUX Output Lines

The AUX connector also has a ground line and three TTL-compatible output lines. The output lines are normally held at the high TTL level. The End of Sweep line produces one 5 μs low-going pulse at the end of each sweep. The Trigger line produces one 5 μs low-going pulse when the Signal Generator has made a large frequency change that may cause loss of phase lock in an instrument tracking the Signal Generator. The Negative Blanking line produces –5V for Z-axis blanking of CRT displays that require a negative blanking voltage.

Table 3-3 AUX Connector Functions

	Pin	Function	Description
INPUTS	1	Recall 1	Recalls the contents of internal storage register 1.
	2	Recall Next	Sequential recall of internal storage registers 2 through 9
	3	FREQ INCREMENT Up	Same as FREQ INCREMENT Up key
	4	FREQ INCREMENT Down	Same as FREQ INCREMENT Down key
	5	Trigger Single Sweep	Same as SINGLE key
	6	Service	Same as internal service switch (on A2A2 Key Code Assembly). Refer to Section VIII, Service
	7	Stop Sweep	Stops sweep. Sweep resumes when this line goes high
	12	No Display	Blanks FREQUENCY MHz display when this pin is grounded and the existing display changes
OUTPUTS	8	Negative Blanking	–5V for blanking
	9	Trigger	One pulse when the Signal Generator has made a frequency change that may cause loss of phase lock to an instrument tracking the Signal Generator
	10	End of Sweep	One pulse at end of each sweep
	11	Ground	

3-14. REMOTE OPERATION, HEWLETT-PACKARD INTERFACE BUS

The Signal Generator can be operated through the Hewlett-Packard Interface Bus (HP-IB). Bus compatibility, programming, and data formats are described in the following paragraphs.

All front panel functions (except that of the LINE switch and the backspace key) and remote-only functions are programmable via HP-IB.

A quick test of the Signal Generator's HP-IB interface is described earlier in this section under Remote Operator's Checks. These checks verify that the Signal Generator can respond to or send each of the applicable bus messages described in Table 3-4.

3-15. HP-IB Compatibility

The Signal Generator has a three-state, TTL, HP-IB interface which can be used with any HP-IB computing controller or computer for automatic system applications. The Signal Generator is programmable via the HP Interface Bus. Its programming capability is described by the twelve HP-IB messages listed in Table 3-4. The Signal Generator's compatibility with HP-IB is further defined by the following list of interface functions: SH1, AH1, T5, TE0, L3, LE0, SR1, RL1, PP1, DC1, DT1, and C0. A more detailed explanation of these compatibility codes can be found in IEEE Standard 488-1978 (and the identical ANSI Standard MC1.1). For more information about HP-IB, refer to the Hewlett-Packard Electronic Instruments and Systems catalog and the booklet titled "Improving Measurements in Engineering and Manufacturing" (HP part number 5952-0058).

3-16. Remote Mode

Remote Capability. The Signal Generator communicates on the bus in both remote and local modes. In remote, most of the Signal Generator's front panel controls are disabled. Exceptions are the LINE switch, the LOCAL key, the MTR keys, the MESSAGE key, and the FREQUENCY, FREQ INCR, SWEEP FREQ and SWEEP RATE keys for displaying "hidden" parameters. However, front panel displays remain active and valid. In remote, the Signal Generator can be addressed to talk or listen. When addressed to listen, the Signal Generator automatically stops talking and responds to the following messages: Data, Trigger (if configured), Clear (SDC), Remote, Local, Local Lockout, and Abort. When addressed to talk, the Signal Generator automatically stops listening and sends one of the following messages: Data, Require Service, or Status Byte. Whether addressed or not, the Signal Generator responds to the Clear (DCL), Local Lockout, Clear Lockout/Set Local, and Abort messages. In addition, the Signal Generator can issue the Require Service message and the Status Bit message.

Local-to-Remote Mode Changes. The Signal Generator switches to remote operation upon receipt of the Remote message. The Remote message has two parts. They are:

a. Remote enable bus control line (REN) set true.

b. Device listen address received once (while REN is true).

When the Signal Generator switches to remote, the RMT annunciator on the front panel turns on. With the exception of VERNIER, which may change by less than 0.1 dB, the Signal Generator's control settings remain unchanged with the Local-to-Remote transition.

3-17. Local Mode

Local Capability. In local, the Signal Generator's front panel controls are fully operational and the instrument responds to the Remote message. The Signal Generator can send a Require Service message, a Status Byte messsage, and a Status Bit message.

Remote-to-Local Mode Changes. The Signal Generator always switches to local from remote whenever it receives the Local message (GTL) when addressed to listen or the Clear Lockout/Set Local message. (The Clear Lockout/Set Local message sets the Remote Enable control line [REN] false.) The Signal Generator can also be switched to local by pressing the front panel LOCAL key (assuming Local Lockout is not in effect). With the exception of VERNIER, which may change by less than 0.1 dB, the Signal Generator's control settings remain unchanged with the Remote-to-Local transition.

Local Lockout. When a data transmission is interrupted, which can happen by pressing the LOCAL key to return the Signal Generator to local mode, the data could be lost. This would leave the Signal Generator in an unknown state. To prevent this, a local lockout is recommended for purely automatic

Table 3-4. Message Reference Table (1 of 2)

HP-IB Message	Applicable	Response	Related Commands and Controls	Interface Functions*
Data	Yes	All front panel functions (except the LINE switch and the Backspace key) and remote-only functions are bus programmable		AH1 SH1 T5 TE0 L3 LE0
Trigger	Yes	If in remote and addressed to listen, the Signal Generator executes a previously selected program code. It responds equally to the Group Execute Trigger (GET) bus command and program code TR (a Data message).	GET	DT1
Clear	Yes	Sets output to 3000.000 MHz at −70 dBm with sweep and modulation off. Resets many additional parameters as shown in Table 3-6. Responds equally to Device Clear (DCL) and Selected Device Clear (SDC) bus commands.	DCL SDC	DC1
Remote	Yes	Remote mode is enabled when the REN bus control line is true. However, remote mode is not entered until the first time the Signal Generator is addressed to listen. The front panel RMT annunciator lights when the instrument is actually in the remote mode.	REN	RL1
Local	Yes	The Signal Generator returns to local mode (front panel control). It responds equally to the Go To Local (GTL) bus command and the front panel LOCAL key.	GTL	RL1
Local Lockout	Yes	The LOCAL key is disabled. Only the controller can return the Signal Generator to local (front panel control).	LLO	RL1
Clear Lockout/ Set Local	Yes	The Signal Generator returns to local (front panel control) and local lockout is cleared when the REN bus control line goes false.	$\overline{\text{REN}}$	RL1
Pass Control/Take Control	No	The Signal Generator has no controller capability.		C0
Require Service	Yes	The Signal Generator sets the SRQ bus control line true if one of the following conditions exists and it has been enabled by the Request Mask to send the message for that condition: Front Panel Key Pressed, Front Panel Entry Complete, Change in Extended Status, Source Settled, End of Sweep, Entry Error, and Change in Sweep Parameters.	SRQ	SR1
Status Byte	Yes	The Signal Generator responds to a Serial Poll Enable (SPE) bus command by sending an 8-bit byte when addressed to talk. If the instrument is holding the SRQ control line true (issuing the Require Service message) bit 7 (RQS bit) in the Status Byte and the bit representing the condition causing the Require Service message to be issued will both be true. The bits in the Status Byte are latched but can be cleared upon receiving the Clear Status (CS) program code, executing the Output Status function, or executing a serial poll while the SRQ control line is held true.	SPE SPD	T5

Table 3-4. Message Reference Table (2 of 2)

HP-IB Message	Appli-cable	Response	Related Commands and Controls	Interface Functions
Status Bit	Yes	The Signal Generator responds to a Parallel Poll Enable (PPE) bus command by sending a bit on a controller selected HP-IB data line.	PPE PPD PPC PPU	PP1
Abort	Yes	The Signal Generator stops talking and listening.	IFC	T5,TE0 LE,LE0

*Commands, Control lines, and Interface Functions are defined in IEEE Std 488-1978. Knowledge of these may not be necessary if your controller's manual describes programming in terms of the twelve HP-IB Messages shown in the left column.

Complete HP-IB capability as defined in IEEE Std 488 and ANSI Std MC1.1 is: SH1, AH1, T5, TE0, L3, LE0, SR1, RL1, PP1, DC1, DT1, and C0.

Local Mode (cont'd)

applications. Local lockout disables the LOCAL key and allows return-to-local only under program control.

NOTE

Return-to-local can also be accomplished by turning the Signal Generator's LINE switch to STBY, then back to ON. However, this technique has some disadvantages:

a. It defeats the purpose and advantage of local lockout (that is, the system controller loses control of a system element).

b. There are several HP-IB conditions that reset to default states at turn-on.

3-18. Addressing

The Signal Generator interprets the byte on the eight HP-IB data lines as an address or a bus command if the bus is in the command mode. The command mode is defined as attention control line (ATN) true and interface clear control line (IFC) false. Whenever the Signal Generator is addressed (if in local or remote), either the TLK or LSN annunciator on the front panel turns on.

The Signal Generator's Talk and Listen addresses can be set from switches located inside the instrument or from the front panel. The address selection procedure is described in Section II.

The decimal equivalent of the addresses can be displayed in the FREQUENCY MHz display by pressing and holding the LOCAL key. This is the decimal equivalent of the last five bits of both the Talk and Listen ASCII address codes. Refer to Table 2-1 for a comprehensive listing of all valid HP-IB address codes.

Listen Only Mode. If the internal Listen Only switch is set to "1", the Signal Generator is placed in the Listen Only mode. The instrument then responds to all Data messages, and the Trigger, Clear, and Local Lockout messages. It can also respond to a parallel poll with the Status Bit message. However, the Signal Generator cannot send Data messages and cannot respond to a serial poll with the Status Byte message.

The Signal Generator's Listen Only address can also be set from the front panel by keying in 4 0, then pressing the STO key and the LOCAL key. Note that the FRONT PNL ENABLE switch on the internal HP-IB address switch must be set to "1" to allow front panel entries.

Talk Only Mode. If the internal address switches are set to a valid Talk address and the Talk Only switch is set to "1", the Signal Generator is placed in the Talk Only mode. In this mode the instrument is configured to send Data messages whenever the bus is in the data mode. It can also send the Status Byte message in response to a serial poll.

Addressing (cont'd)
The Signal Generator's Talk Only address can also be set from the front panel by keying in 5 0, then pressing the STO key and the LOCAL key. Note that the FRONT PNL ENABLE switch on the internal HP-IB address swhtch must be set to "1" to allow front panel entries.

3-19. Turn-on Default Conditions

Several HP-IB parameters are reset at turn-on. The parameters and their default conditions are listed below.

- HP-IB Local Mode
- Immediate Execution Mode
- Unaddressed
- Trigger Configuration cleared
- Request Mask cleared
- SRQ cleared

3-20. Displays

The RMT annunciator is on when the Signal Generator is in the remote mode and after it has received its first Data message. The TLK annunciator is on when the Signal Generator is currently addressed to talk; the LSN annunciator is on when the Signal Generator is currently addressed to listen. The SRQ annunciator is on when the Signal Generator is sending the Require Service message.

The MESSAGE key lights for the same conditions in remote as in local. The message can be read in either remote or local when the Signal Generator is under program control. Once the message has been read the key light turns off, whether or not the causing condition has been crorrected.

The FREQUENCY MHz and RANGE dBm displays operate in remote mode just as they do in local. Hidden parameters can still be displayed in the FREQUENCY MHz display by pressing and holding their front panel keys. (This capability is not available to the controller since it cannot hold a program code in the same manner that an operator can hold down a key. However, the Output Active Parameter talk function allows the controller to use its display for showing the current value of hidden parameters.)

3-21. Output Level

Setting output level is the only front panel feature that is not operated in an identical manner in local and remote modes. In local, RANGE is set in steps of 10 dBm and displayed in the RANGE dBm display. The VERNIER knob sets the intermediate values of output power and is read on the meter. In remote, VERNIER is set in 0.1 dB steps. A selection of programming codes allows either combined or independent setting of the RANGE and VERNIER power. The entry format is [Program Code] [Numeric Value] [Units Terminator]. The code LE sets both range and vernier. The code RA sets just the range. The code VE sets just the vernier.

In going from local to remote the output level might change by a fraction of a dB. In going from remote to local the front panel knob takes control. There is no assurance of whether the power will go up, go down, or stay the same.

3-22. Data Messages

The Signal Generator communicates on the interface bus primarily with Data messages. Data messages consist of one or more bytes sent over the bus' data lines when the bus is in the data mode (attention control line [ATN] false). Unless it is set to Talk Only, the Signal Generator receives Data messages when addressed to listen. Unless it is set to Listen Only, the Signal Generator sends Data messages or the Status Byte message when addressed to talk. Virtually all instrument operations available in local mode can be performed in remote mode via Data messages. The major exceptions are changing the LINE switch setting and changing the HP-IB address of the Signal Generator.

3-23. Receiving Data Messages

The Signal Generator responds to Data messages when it is enabled to remote (REN control line true) and it is addressed to listen. The instrument remains addressed to listen until it receives an Abort message or until its talk address or a universal unlisten command is sent by the controller.

Data Message Input Format. The Data message string, or program string, consists of a series of ASCII codes. Each code is typically equivalent to a front panel keystroke in local mode and follows one of three formats:

- [Program Code] [Numeric Value] [Units Terminator] [EOS]
- [Program Code] [Numeric Value] [EOS]
- [Program Code] [EOS]

Receiving Data Messages (cont'd)
Program codes are typically 2 character mnemonics. All codes normally used by the operator to control the Signal Generator are given in Table 3-7, HP-IB Program Codes.

Numeric values are either a single decimal digit, a set of 11 characters or less representing a number, or a string of binary bytes. A string of 11 characters maximum can be expressed in decimal form only. Digits beyond the front panel display capability of a particular parameter are truncated. Therefore, it is best to format the data so that it is rounded to the correct number of digits.

Units terminators are 2 character codes that terminate and scale the associated numeric value. Frequency can be entered in GHz, MHz, kHz, or Hz. Sweep time values are entered in milliseconds. Power values are entered in dB.

End-of-String messages (EOS) can be the ASCII characters Line Feed (LF), semicolon (;), or the bus END message (that is, bus lines EOI true and ATN false). The at sign (@) acts as an EOS when the Signal Generator is in the Deferred Execution mode.

Valid Characters. The ASCII characters used for program strings are: A-Z a-z 0-9 . - + LF , ; @. The alpha program codes can be either upper or lower case since the Signal Generator will accept either type (they can be interchanged). Spaces, unnecessary signs (+, -), leading zeros, and carriage returns (CR) are ignored. However, if a space or other such character were inserted between 2 characters of a program code, the program code would be invalid and any remaining characters in a string might be misinterpreted by the Signal Generator. After receiving an invalid program code, the Signal Generator requires a valid program code before it will respond to numeric entries.

Immediate Execution Mode. ASCII characters can be accepted in the Deferred or Immediate execution modes. Immediate Execution is the default mode at turn-on. It can be set, if necessary, by sending the program code @3. In this mode the Signal Generator produces an End-of-String (EOS) message at the end of each character and does not require one from the controller. The Signal Generator processes each character before accepting the next one. Therefore, the Immediate Execution mode does slow down overall data transfer. However, the Signal Generator can switch faster after the final EOS message than it can in the other mode. This is useful when the system controller is slow enough (data rate <1000 bytes/second) that it cannot take advantage of the Deferred mode's transfer speed or when switching time, independent of message length, is more important than program execution speed.

Deferred Execution Mode. This ASCII mode must be selected by sending the program code @2. In this mode, the Signal Generator accepts strings up to 96 characters at a time, executing the string upon receiving an EOS message. The Signal Generator produces its own EOS message upon receipt of the 96th character in a string. If a block of strings containing more than 96 characters is sent, the first 96 characters are accepted and the Signal Generator holds the bus busy until it executes them. Then the next 96 characters are accepted and so on until the entire block is accepted. If only one string of less than 96 characters is sent, the Signal Generator accepts the strings and frees the bus allowing program execution to continue.

Binary Mode. The Signal Generator's Request Mask is programmed in binary format. Also, learn mode data is sent and received in binary. Binary data is always processed in the Immediate Execution mode.

3-24. Sending the Data Message

The Signal Generator can send Data messages when addressed to talk. It remains configured to talk until it is unaddressed to talk by the controller. To unaddress the Signal Generator, the controller must send the Signal Generator's listen address, an Abort message, a new talk address, or a universal untalk command.

Talk Functions. The types of information that the Signal Generator can send in a Data message are:

- Front Panel Learn Mode
- Special Function Learn Mode
- Messages
- Output Active Parameter
- Output Couple
- Output Lock Frequency
- Test Interface
- Output Status
- Output Request Mask Value (explained later under Sending the Request Mask Value).

Each function is enabled by first addressing the Signal Generator to listen. Then, the Signal Gen-

Sending the Data Message (cont'd)
erator must receive a Data message with the appropriate program code. When the Signal Generator is addressed to talk, it will output data for the selected talk function. If the controller does not repeat the program code or send a new one, the Signal Generator sends data for the last selected talk function when it is addressed to talk. However, it is recommended that a talk function program code be sent each time, prior to addressing the Signal Generator to talk. This will ensure that the Signal Generator sends the appropriate data. Refer to Table 3-5 for a summary of talk functions.

Front Panel Learn Mode. The front panel learn mode uses the controller's memory to learn and store a data string that describes the Signal Generator's current front panel setting. Once an instrument state has been learned, the Signal Generator can be restored to that configuration at a later time. The learn mode requires a controller that can transfer information in binary form.

After receiving an L1 program code (Front Panel Learn Mode) and when addressed to talk, the Signal Generator sends 2 ASCII characters, @ and A, followed by a string of 94 8-bit binary bytes containing information on the front panel configuration. This binary data can then be stored in the controller's memory for future use. In addition, as each configuration goes out onto the bus, it is also stored in the Signal Generator's register 9. The most straight-forward way to program the system controller is to use a loop to read 96 binary characters and store them in an array.

When the Signal Generator is addressed to listen, the binary data can be returned to it in 96-byte strings. When the Signal Generator detects the @A, it will expect the next 94 characters to be in the learn mode string. A checksum is embedded in the string so that possible errors in the storage or transmission of the data will be detected, and the input will be ignored.

Whenever data is being transferred between controller and Signal Generator, it must do so in uninterrupted strings. If a data string is broken or interrupted, the data could be lost or offset, and misinterpreted by the Signal Generator. An offset of data bytes can persist through later data strings until the Signal Generator is eventually switched to standby, then on again.

Special Function Learn Mode. This mode is intended for servicing the Signal Generator. It is similar in operation to the front panel learn mode. After receiving an L2 program code (Special Function Learn Mode) and when addressed to talk, the Signal Generator sends 2 ASCII charcters, @ and 9, followed by a string of 24 8-bit binary bytes. This binary data can then be stored in the controller's memory.

The binary characters are directly related to the digital outputs of the Signal Generator's internal controller. There is no checksum or other error detecting scheme, allowing diagnostic and other special functions that are not normally possible with the Signal Generator. Refer to Section VIII, Service, for additional information.

Messages. This function enables the MESSAGE key to be read under program control. After receiving an MG program code (Message) and when addressed to talk, the Signal Generator sends a two-digit number coded in ASCII followed by a Line Feed (LF) and EOI. The codes represent entry errors and instrument malfunctions. The two-digit codes are explained on the operating information pull-out card and in the Message Detailed Operating Instruction. The Message can always be read by pressing the MESSAGE key, even when the Signal Generator is in remote mode. However, reading the Message once, either in remote or local, clears it to 00 (No Error) whether or not the causing condition has been corrected.

Output Active Parameter. This function allows the user to determine the present value of a specific parameter. After receiving the program code for a value-selectable parameter followed by the program code OA (Output Active) and when addressed to talk, the Signal Generator will output a string over the bus consisting of the following: [Selected Program Code][Current Numeric Value][Units Terminator][LF and EOI]. Any parameter that has a numeric value associated with it can be interrogated. An exception to this output format is Steps. When the controller sends "SPOA", the Signal Generator returns with the string: SP[Step Size]HZ, SP[Number of Steps]SS, [LF and EOI]. The Signal Generator may output a program code that differs from the code sent to it by the controller. For example, the Signal Generator responds with the program code CF (center frequency) when sent FR (frequency) and MK (marker) when sent M1, M2, M3, M4, or M5 (Markers 1 through 5).

Table 3-5. Talk Functions

Function	Program Code	Signal Generator Output Response to Program Code	Comments
Front Panel Learn Mode	L1	96 Binary Bytes |EOI|	
Special Function Learn Mode	L2	26 Binary Bytes |EOI|	See Section VIII, Service
Message	MG	2 Digits |LF and EOI|	
Output Active Parameter	|Progam Code| OA	|Program Code||Numeric Value||Units Terminator||LF and EOI|	Valid Functions: CF, FI, FA, FB, FS, M1-5, DW, LE, VE, RA
	SPOA	SP |Step Size| Hz, SP |# of Steps| SSSP |LF and EOI|	
Output Couple	OC	|START Value|, |Center-Frequency Value|, |Dwell Value||LF and EOI|	Frequency is in Hz; dwell is in seconds.
Output Lock Frequency	OK	FR |Numeric Value| Hz |LF and EOI|	
Test Interface	TI |1 Byte|	1 Byte |EOI|	
Output Status	OS	2 Bytes |EOI|	
Output Request Mask	OR	1 Byte |EOI|	

Sending the Data Message (cont'd)

Output Couple. After receiving the program code OC (Output Couple) and when addressed to talk, the Signal Generator sends a data string that gives the current numeric values for the following parameters in the order listed: [START], [Center Frequency], [DWELL] [LF and EOI]. No program codes prefix the numeric values. Hz is the implied terminator for start and center frequency; seconds is the implied terminator for dwell time.

Output Lock Frequency. This function causes the Signal Generator to output the value of its tuned frequency. After receiving the program code OK and when addressed to talk, the Signal Generator sends the value of the frequency at which it is currently phase locked. The data output from the Signal Generator is in the following format: FR [Numeric Value] HZ [LF and EOI].

Test Interface Function. This function allows testing of the HP-IB interface. After receiving the program code TI, followed by an 8-bit byte representing one or more data lines (see table below) and when addressed to talk, the Signal Generator sends the binary byte that it just received. Refer to Section VIII, Service, for additional information.

HP-IB Data Line	DI08	DI07	DI06	DI05	DI04	DI03	DI02	DI01
Weight	128	64	32	16	8	4	2	1

Output Status. After receiving the program code OS (Output Status) and when addressed to talk, the Signal Generator sends two binary bytes, each 8 bits wide. The first byte is identical to the Status Byte of the Serial Poll. The second byte is the Extended Status Byte which provides additional information. See Figure 3-8 for a description of each Status Byte. Bits in the main Status Byte are cleared upon execution of the Output Status function or the Clear Status (CS) program code. Bits on the Extended Status Byte are cleared by removing the causing condition and performing the Output Status function.

3-25. Receiving the Clear Message

The Signal Generator responds to the Clear message by assuming the settings detailed in Table 3-6. The Signal Generator responds equally to the Selected Device Clear (SDC) bus command when addressed to listen, and the Device Clear (DCL) bus command whether addressed or not. The Clear message clears any pending Require Service message.

Table 3-6. Response to a Clear Message

Parameter	Condition
Execution Mode	Immediate
Request Mask	Cleared
Require Service (SRQ)	Cleared
Trigger Configuration	Cleared
MESSAGE	Cleared (set to 00)
RF OUTPUT	ON
ALC	INTERNAL
RANGE	−70 dBm
VERNIER	0.0 dB
AUTO PEAK	ON
MTR	LVL
AM, FM, and Pulse Modulation	OFF
FREQUENCY	3000.000 MHz
FREQ INCR	1.000 MHz
START	2000.000 MHz
STOP	4000.000 MHz
ΔF	2000.000 MHz
MKR	OFF
SWEEP MODE	OFF
STEP	100 steps (20.000 MHz)
DWELL	20 ms
TUNE Knob	ON

3-26. Receiving the Trigger Message

The Signal Generator responds to a Trigger message only if a response has been pre-programmed (see Configure Trigger). Otherwise, it ignores a Trigger message. It responds equally to a Trigger message (with bus command GET) and a Data message with program code TR (Trigger).

Configure Trigger. The Signal Generator's response to a Trigger message is set when it receives a Data message containing the program code CT followed by one valid program code. For example, CTW6 causes a single sweep (W6) when the Trigger message is received.

3-27. Receiving the Remote Message

The Remote message has two parts. First, the remote enable bus control line (REN) is held true; second, the device listen address is sent by the controller. These two actions combine to place the Signal Generator in remote mode. Thus, the Signal Generator is enabled to go into remote when the controller begins the Remote message, but it does not actually switch to remote until addressed to listen the first time. When actually in remote, the Signal Generator's front panel RMT annunciator lights.

3-28. Receiving the Local Message

The Local message is the means by which the controller sends the Go To Local (GTL) bus command. If addressed to listen, the Signal Generator returns to front panel control when it receives the Local message.

When the Signal Generator goes to local mode, the front panel RMT annunciator turns off. However, even when in local, if the Signal Generator is being addressed, its front panel LSN or TLK annunciator turns on.

3-29. Receiving the Local Lockout Message

The Local Lockout message is the means by which the controller sends the Local Lockout (LLO) bus command. If in remote, the Signal Generator responds to the Local Lockout Message by disabling the front panel LOCAL key. The local lockout mode prevents loss of data or system control due to someone accidentally pressing front panel keys. If, while in local, the Signal Generator is enabled to remote (that is, REN is set true) and it receives the Local Lockout message, it will switch to remote mode with local lockout the first time it is addressed to listen. When in local lockout, the Signal Generator can be returned to local only by the controller (using the Local or Clear Lockout/Set Local messages), by setting the LINE switch to STBY and back to ON, or by removing the bus cable.

3-30. Receiving the Clear Lockout/Set Local Message

The Clear Lockout/Set Local message is the means by which the controller sets the Remote Enable (REN) bus control line false. The Signal Generator returns to local mode (full front panel control) when it receives the Clear Lockout/Set Local message. When the Signal Generator goes to local mode, the front panel RMT annunciator turns off.

3-31. Receiving the Pass Control Message

The Signal Generator does not respond to the Pass Control message because it does not have this controller capability.

3-32. Sending the Require Service Message

The Signal Generator sends a Require Service message if one or more of the following conditions exist and if it has been pre-programmed to send the message by the Request Mask.

- Front Panel Key Pressed: when the Signal Generator is in local mode and one of the front panel keys is pressed.
- Front Panel Entry Complete: when the Signal Generator is in local mode and is finished processing a front panel entry.
- Change in Extended Status: when one of the bits on the Extended Status Byte changes.
- Source Settled: when the Signal Generator is settled. Switching transients occur when RF and AUTO PEAK are turned on, and when FM ranges and frequency are changed. If the controller responds to the Signal Generator as soon as the source is settled, instead of waiting a specified time, program speed is increased.
- Entry Error: When an invalid keystroke or program command occurs.
- New Sweep Parameters: when the value of START, STOP, ΔF, DWELL, STEP, or any Marker changes.

The Signal Generator can send a Require Service message in either the local or remote mode.

The Signal Generator sends a Require Service message by setting the Service Request (SRQ) bus line true. The SRQ annunciator on the front panel turns on when the Require Service message is being sent. The Require Service message is cleared after the Output Status function or the Clear Status (CS) program code has been executed by the controller.

Request Mask. The Request Mask functions within the Status Byte. It determines which bits can set the RQS bit true (see Figure 3-8) and consequently set the SRQ bus line true.

The Request Mask is set by the program code @1 followed by an 8-bit byte (a Data Message). The value of the byte is determined by summing the weight of each bit to be checked. Each bit, if true, enables a corresponding conditon to set the RQS bit true. This message is executed immediately and does not require an End-of-String message to be sent. At turn-on, the Request Mask is cleared (that is, set to 0).

Sending the Request Mask Value (a Data Message). After receiving an OR program code (Output Request Mask) and when addressed to talk, the Signal Generator will send a single binary word (8 bits) that describes the present state of the mask. The bit pattern can be interpreted with the information in Figure 3-8.

NOTE

This byte is sent with the bus EO1 line true, thus terminating the message.

3-33. Sending the Status Byte Message

After receiving a Serial Poll Enable bus command (SPE) and when addressed to talk, the Signal Generator sends a Status Byte message. The message consists of one 8-bit byte of which 7 bits correspond to the pattern and descriptions for the Request Mask. The remaining bit, bit 7, is the RQS Request Service bit (see Figure 3-8).

The RQS bit is set when one of the other seven conditions exists and that condition has been enabled by the Request Mask. Bits 1—6 and 8 might be true regardless of conditioning by the Request Mask. However, if a condition has not been selected by the mask, it cannot cause the RQS bit to be set true.

Extended Status Byte. A second status byte is available but can only be accessed via the Output Status function (see explanation under Sending the Data Message). Bit 3 of the Status Byte indicates whether a change has occurred in the Extended Status Byte. If Bit 3 is true, the second status byte should be accessed via the Output Status function to determine the cause of the status change. The bit pattern can be interpreted with the information in Figure 3-8.

3-34. Clearing the Status Byte

Once the Signal Generator sets the SRQ bus line true, it is no longer allowed to alter the Status Byte. If a bit has been enabled and the condition occurs after the SRQ bus line has been set true, the

STATUS BYTE (#1)								
BIT	8	7	6	5	4	3	2	1
WEIGHT	128	64	32	16	8	4	2	1
Condition	Change in Sweep Parameters	RQS Bit Request Service	Entry Error	End of Sweep	Source Settled	Change in Extended Status	Front Panel Entry Complete	Front Panel Key Pressed

EXTENDED STATUS BYTE (#2)								
BIT	8	7	6	5	4	3	2	1
WEIGHT	128	64	32	16	8	4	2	1
Condition	0 (always)	ALC Unleveled	Power Failure/On	Not Locked	External Ref	0 (always)	FM Overmod	Self-Test Failed

Figure 3-8. Status Byte Information

Clearing the Status Byte (cont'd)
bit is stored in a buffer and is read the next time the Signal Generator receives the Serial Poll Enable (SPE) bus command. When addressed to talk (following SPE), the Signal Generator sends the Status Byte message.

After the Status Byte message has been sent it will be cleared if the Serial Poll Disable (SPD) bus command is received, if the Abort message is received, or if the Signal Generator is unaddressed to talk. However, bits stored in the buffer waiting to be read are not cleared. Regardless of whether or not the Status Byte message has been sent, the Status Byte and any Require Service message pending will be cleared if a Clear Status (CS) program code is received or the Output Status function is executed.

NOTE

The Signal Generator must receive a universal untalk command after sending the Status Byte message. Most system controllers send this automatically. However, if a universal untalk command is not sent, the SRQ bus line may not be re-initialized and pending Service Requests may get lost.

3-35. Sending the Status Bit Message

The Signal Generator sends the Status Bit message (if configured) as part of the interface's response byte to the Parallel Poll Enable (PPE) bus command. In order for the Signal Generator to respond to a Parallel Poll Enable bus command it must be assigned a single HP-IB data line by the controller. The controller also assigns the logic level of the bit. Both tasks can be accomplished by the Parallel Poll Configure (PPC) bus command. If the Signal Generator is sending the Require Service message, it will set its assigned status bit true. The Signal Generator can send the Status Bit message without being addressed to talk.

The data line that the Signal Generator is assigned to respond on can be cleared by turning the instrument to STBY or by sending the Parallel Poll Unconfigure (PPU) bus command.

3-36. Receiving the Abort Message

The Abort message is the means by which the controller sets the Interface Clear (IFC) bus control line true. When the Abort message is received, the Signal Generator becomes unaddressed and stops talking or listening.

Table 3-7. HP-IB Program Codes

Program Code	Parameter
AO	AM OFF
AP	Level (RANGE and VERNIER)
A0	AM OFF
A1	AM OFF
A2	AM 30%
A3	AM 100%
CF	Center Frequency
CS	Clear Status
CT	Configure Trigger
CW	CW Frequency
C1	ALC INTERNAL
C2	ALC DIODE
C3	ALC PWR MTR
DB	dB
DF	ΔF
DM	dB
DN	FREQ INCREMENT (Down)
DO	FM DEVIATION OFF
DW	DWELL
D0	FM DEVIATION OFF
D1	FM DEVIATION OFF
D2	FM DEVIATION .03 MHz
D3	FM DEVIATION .1 MHz
D4	FM DEVIATION .3 MHz
D5	FM DEVIATION 1 MHz
D6	FM DEVIATION 3 MHz
D7	FM DEVIATION 10 MHz
FA	START Sweep Frequency
FB	STOP Sweep Frequency
FI	FREQ INCR
FN	FREQ INCR
FR	FREQUENCY
FS	ΔF
F1	FREQ INCR
GZ	GHz
HZ	Hz
IF	FREQ INCREMENT (Up)
IP	Instrument Preset
KZ	kHz
K0	AUTO PEAK OFF
K1	AUTO PEAK ON
K2	AUTO PEAK without extra settling time
LE	Level (RANGE and VERNIER)
L1	Front Panel Learn Mode
L2	Special Function Learn Mode
MG	MESSAGE
MO	Marker(s) OFF
MS	milliseconds
MZ	MHz
M0	Marker(s) OFF
M1	Marker 1
M2	Marker 2
M3	Marker 3
M4	Marker 4
M5	Marker 5
NO	TUNE Knob OFF
N0	TUNE Knob OFF
N1	TUNE Knob ON
OA	Output Active Parameter

Program Code	Parameter
OC	Output Couple
OK	Output Lock Frequency
OL	Front Panel Learn Mode
OR	Output Request Mask
OS	Output Status
PL	Power Level (RANGE and VERNIER)
PO	PULSE OFF
P0	PULSE OFF
P1	PULSE OFF
P2	PULSE NORM
P3	PULSE COMP
RA	RANGE
RC	Recall (RCL)
RD	RANGE Down 10 dB
RF0	RF OFF
RF1	RF ON
RL	Recall (RCL)
RM	RQS Mask
RO	RF OFF
RS	Reset Sweep
RU	RANGE Up 10 dB
R0	RF OFF
R1	RF ON
SD	Slave Down
SF	STEP
SM	MANUAL Sweep
SP	STEP
SS	Steps (suffix)
ST	Store (STO)
SU	Slave Up
SV	Service Function
TI	Test Interface
TR	Execute Trigger
T1	Meter LVL
T2	Meter AM
T3	Meter FM
UP	FREQ INCREMENT (Up)
VE	VERNIER
WO	SWEEP MODE OFF
W0	SWEEP MODE OFF
W1	SWEEP MODE OFF
W2	AUTO Sweep
W3	MANUAL Sweep
W4	SINGLE Sweep
W5	SINGLE Sweep: Arm Only
W6	SINGLE Sweep: Arm and Begin
W7	Master Sweep
W8	Slave Sweep
X0	Marker(s) OFF
X1	Marker 1
X2	Marker 2
X3	Marker 3
X4	Marker 4
x5	Marker 5
@A	Start of Front Panel Learn Mode
@1	Prefix for Request Mask
@2	Deferred Execution Mode
@3	Immediate Execution Mode
@9	Start of Special Function Learn Mode

SECTION IV

PERFORMANCE TESTS

4-1. INTRODUCTION

The procedures in this section test the instrument's electrical performance using the specifications of Table 1-1 as the performance standards. These tests are suitable for incoming inspection, trouble shooting, and preventative maintenance. All tests can be performed without access to the interior of the instrument. A simpler operational test is included in Section III under Operator's Checks.

4-2. ABBREVIATED PERFORMANCE TEST

In most cases, it is not necessary to perform all of the tests in this section. Table 4-1 lists the tests that are recommended for various conditions. The Operator's Checks in Section III should always be the first step.

NOTE

If the performance tests are to be considered valid, the following conditions must be met:

a. The Signal Generator must have a 1-hour warm-up for all specifications.

b. The line voltage for all instruments except those with Option 003 must be 100, 120, 220, or 240 Vac +5%, -10%; the line frequency must be 48 to 66 Hz. Instruments with Option 003 have the additional capability of operating on line frequencies of 48 to 440 Hz, but the line voltage is limited to a nominal 100 or 120 Vac if the line frequency is >66 Hz.

c. The ambient temperature must be 0 deg.C to 55 deg.C.

4-3. CALIBRATION CYCLE

This instrument requires periodic verification of performance to ensure that it is operating within specified tolerances. The performance tests described in this section should be performed at least once each year; under conditions of heavy usage or severe operating environments, the tests should be more frequent. Adjustments that may be required are described in Section V, Adjustments.

4-4. PERFORMANCE TEST RECORD

Results of the performance test may be tabulated in Table 4-2, Performance Test Record. The Performance Test Record lists all of the performance test specifications and the acceptable limits for each specification. If performance test results are recorded during an incoming inspection of the instrument, they can be used for comparison during periodic maintenance or troubleshooting . The test results may also prove useful in verifying proper adjustments after repairs are made. .

4-5. EQUIPMENT REQUIRED

Equipment required for the performance tests is listed in Table 1-3, Recommended Test Equipment. Any equipment that satisfies the critical specifications given in the table may be substituted.

4-6. TEST PROCEDURES

It is assumed that the person performing the following tests understands how to operate the specified test equipment. Equipment settings, other than those for the Signal Generator, are stated in general terms. For example, a test might require that a spectrum analyzer's resolution bandwidth be set to 100 Hz; however, the time per division would not be specified and the operator would be expected to set that control and other controls as required to obtain an optimum display. It is also assumed that the technician will select the cables, adapters, and probes (listed in Table 1-3) required to complete the test setups illustrated in this section.

PERFORMANCE TESTS

4-7. FREQUENCY RANGE AND RESOLUTION TESTS

SPECIFICATIONS:

Electrical Characteristics	Performance Limits	Conditions
FREQUENCY		
Range	2.0 - 26.0 GHz (1.95 - 26.5 GHz overrange)	
Resolution	1 kHz	2.0 to 6.6 GHz
	2 kHz	6.6 to 12.3 GHz
	3 kHz	12.3 to 18.6 GHz
	4 kHz	18.6 to 26.0 GHz

DESCRIPTION: This test checks the output frequency range and minimum resolution in each frequency band using a frequency counter. The full frequency range is further checked by tuning each frequency digit from 0 to 9 in succession.

EQUIPMENT REQUIRED:

Frequency Counter.....HP 5343A

PROCEDURE:

1. Connect the equipment as shown in Figure 1.

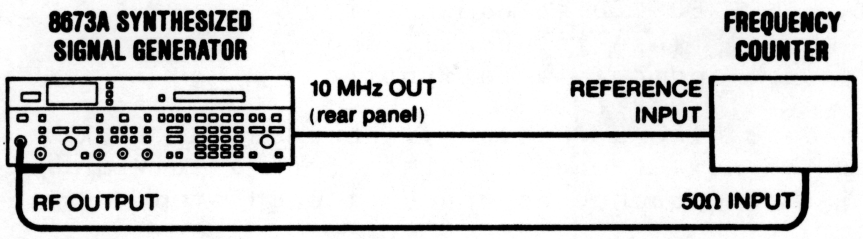

Figure 4-1. Frequency Range and Resolution Test Setup

PERFORMANCE TESTS

2. Select 1 kHz display resolution and external reference on the counter.

3. Set Signal Generator to 2.0 GHz and the output power to 0 dBm. The counter should read 2.000 000 GHz within one count.

4. Set Signal Generator to 26.0 GHz. The counter should read 26.000 000 GHz within one count.

5. Set Signal Generator to any other frequency of interest and check counter reading. All readings should be within one count of the Signal Generator setting.

6. Set the Signal Generator to 2.0 GHz and FREQ INCR to 1 kHz. Change frequency in 1 kHz steps while observing the counter. Insure that the Signal Generator output frequency is accurate within one count on the counter.

7. Repeat step 6 in the frequency bands listed in the specifications, with the resolutions listed.

8. Set the Signal Generator frequency to 2.0 GHz. Starting with a frequency increment of 1 kHz, step the 1 kHz digit from 0 to 9, insuring that the frequency is accurate within one count on the counter, and the Signal Generator NOT PHASE LOCKED front panel LED remains off at all frequency settings.

NOTE

Fast tuning of frequency with the TUNE control may cause the NOT PHASE LOCKED LED to momentarily flash on. This is normal, and does not indicate a malfunction.

9. Repeat step 8 with a frequency increment of 10 kHz stepping the next frequency digit from 0 to 9 and checking the frequency accuracy at each step.

10. Repeat step 8, increasing the frequency increment by a factor of 10 each time, until the frequency is 2.999 999 GHz, checking the frequency at each step for accuracy of +-1 kHz at each step.

11. Set the frequency increment to 1 GHz and step the GHz frequency digits from 2 to 25, ending at 25.999 999 GHz, checking the frequency at each step for accuracy of +-1 kHz.

PERFORMANCE TESTS

4-8. OUTPUT LEVEL, HIGH LEVEL ACCURACY AND FLATNESS TESTS

SPECIFICATIONS:

Electrical Characteristics	Performance Limits	Conditions
RF OUTPUT		
Output Level:		+15 to +35 deg. C
Leveled Output	+8 dBm to --100 dBm	2.0 to 18.0 GHz
	+4 dBm to --100 dBm	18.0 to 22.0 GHz
	0 dBm to --100 dBm	22.0 to 26.0 GHz
Option 001 Leveled Output	+10 dBm to --10 dBm	2.0 to 18.0 GHz
	+6 dBm to --10 dBm	18.0 to 22.0 GHz
	+3 dBm to --10 dBm	22.0 to 26.0 GHz
Option 004 Leveled Output	+7 dBm to --100 dBm	2.0 to 18.0 GHz
	+2 dBm to --100 dBm	18.0 to 22.0 GHz
	--2 dBm to --100 dBm	22.0 to 26.0 GHz
Option 005 Leveled Output	+9 dBm to --10 dBm	2.0 to 18.0 GHz
	+4 dBm to --10 dBm	18.0 to 22.0 GHz
	+1 dBm to --10 dBm	22.0 to 26.0 GHz
Remote Programming Absolute Level Accuracy (+15 to +35 deg. C)		2.0 - 6.6 GHz
	+/- 1.25 dB	+10 dBm output level range
	+/- 1.00 dB	0 dBm output level range
	+/- 1.50 dB	--10 dBm output level range
	+/- 1.70 dB	--20 dBm output level range
		6.6 - 12.3 GHz
	+/- 1.50 dB	+10 dBm output level range
	+/- 1.25 dB	0 dBm output level range
	+/- 1.75 dB	--10 dBm output level range
	+/- 1.95 dB	--20 dBm output level range

PERFORMANCE TESTS

SPECIFICATIONS (Continued):

Electrical Characteristics	Performance Limits	Conditions
RF OUTPUT (Contd)		
		12.3 - 18.6 GHz
	+/- 1.75 dB	+10 dBm output level range
	+/- 1.50 dB	0 dBm output level range
	+/- 2.10 dB	--10 dBm output level range
	+/- 2.30 dB	--20 dBm output level range
		18.6 - 26.0 GHz
	+/- 2.00 dB	0 dBm output level range
	+/- 2.55 dB	--10 dBm output level range
	+/- 2.85 dB	--20 dBm output level range
Manual Absolute Level Accuracy	Add +/- 0.75 dB to remote programming absolute level accuracy	Absolute level accuracy specifications include allowances for detector linearity, temperature, flatness, attenuator accuracy, and measurement uncertainty
Flatness (0 dBm range; +15 to +35 deg. C)	+/- 0.75 dB	2.0 to 6.6 GHz
	+/- 1.00 dB	2.0 to 12.3 GHz
	+/- 1.25 dB	2.0 to 18.6 GHz
	+/- 1.75 dB	2.0 to 26.0 GHz

PERFORMANCE TESTS

DESCRIPTION: High level accuracy (+13 dBm to -20 dBm) and flatness are verified using a power meter and sensor.

EQUIPMENT REQUIRED:

Power Meter.....HP 436A
Power Meter Sensor.....HP 8485A

PROCEDURE: Output Level Test

1. Connect the power sensor to the power meter. Calibrate and zero the power meter.

2. Connect the power sensor to the RF OUTPUT connector of the Signal Generator as shown in Figure 4-2.

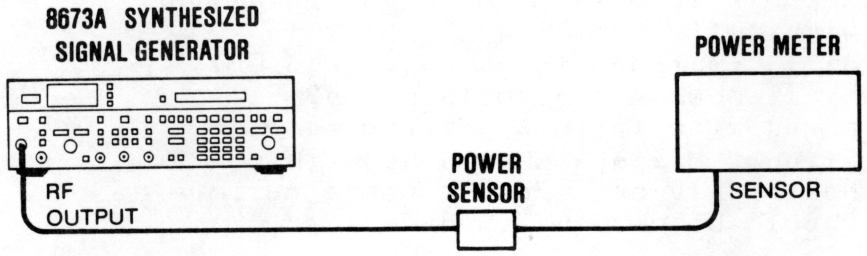

Figure 4-2. High Level Accuracy and Flatness Test Setup

3. Set the Signal Generator frequency to 2.0 GHz and the output level range to +10 dBm.

4. Adjust the VERNIER control to give a power meter reading of +8 dBm.

5. Peak the Signal Generator output with the AUTO PEAK key.

6. Tune the Signal Generator in 100 MHz steps from 2 to 18 GHz, adjusting the power meter's calibration factor and noting frequency at the minimum power point. Measure and record the maximum power at this point. It should be +8 dBm or greater.

2.0-18.0 GHz Minimum power_____ Frequency_____

7. Set the Signal Generator power to +4 dBm at 18.100 002 GHz. Step the frequency in 100 MHz steps from 18.100 002 to 22 GHz, adjusting the power meter's calibration factor and noting frequency at the minimum power point. Measure and record the maximum power at this point. It should be +4 dBm or greater.

PERFORMANCE TESTS

8. Set the Signal Generator power to 0 dBm at 22.1 GHz and step the frequency in 100 MHz steps from 22.1 to 26 GHz, adjusting the power meter's calibration factor and noting frequency at the minimum power point. Measure and record the maximum power at this point. It should be 0 dBm or greater.

22-26 GHz Minimum power_____ Frequency_____

PROCEDURE: Level Flatness

9. Set frequency to 2 GHz, output level to -5 dBm, and power meter to dB Relative. Tune to 6.6 GHz in 100 MHz steps and record the minimum and maximum power outputs. Maximum variation should be within 1.5 dB (highest point to lowest point). Continue to tune to 12.3 GHz. Maximum variation should be within 2 dB. Continue on and tune to 18.6 GHz and note level variation. Maximum should be within 2.5 dB. Continue and tune to 26 GHz where maximum variation should be within 3.5 dB.

NOTE
The plus and minus specification for power output is not referenced to a particular frequency. The specification, rather, represents the total power variation over the entire frequency range.

2.0-6.6 GHz	+-0.75 dB	Minimum_____		
		Maximum_____		
		Total Variation_____		1.50 dB
2.0-12.3 GHz	+-1.00 dB	Minimum_____		
		Maximum_____		
		Total Variation_____		2.00 dB
2.0-18.6 GHz	+-1.25 dB	Minimum_____		
		Maximum_____		
		Total Variation_____		2.50 dB
2.0-26.0 GHz	+-1.75 dB	Minimum_____		
		Maximum_____		
		Total Variation_____		3.50 dB

PERFORMANCE TESTS

PROCEDURE: High Level Accuracy Test

10. Connect the power sensor to the power meter. Calibrate and zero the power meter in the dBm mode.

11. Connect the power sensor to the RF OUTPUT connector of the Signal Generator.

12. Set the Signal Generator frequency to 2.0 GHz and adjust the VERNIER control to give a reading of +8 dBm on the instrument's OUTPUT LEVEL meter.

13. Peak the Signal Generator output with the AUTO PEAK key.

14. Tune the Signal Generator in 2 GHz steps from 2 to 18 GHz. Set the power meter's calibration factor appropriately and record the power output at each frequency. The power meter readings should be within the limits specified.

15. Set the Signal Generator frequency to 2.0 GHz and adjust the VERNIER control to give a reading of +3 dBm on the instrument's OUTPUT LEVEL meter.

16. Tune the Signal Generator in 2 GHz steps from 2 to 22 GHz. Set the power meter's calibration factor appropriately and record the power output at each frequency. The power meter readings should be within the limits specified.

17. Repeat steps 15 and 16 for power levels of 0, -5, and -10 dBm in the 0 dBm range, stepping from 2 to 26 GHz in 2 GHz steps.

18. Repeat steps 15 and 16 for power levels of -10 dBm and -20 dBm in the -10 dBm and -20 dBm ranges respectively.

PERFORMANCE TESTS

4-9. LOW LEVEL ACCURACY TESTS

SPECIFICATION:

Electrical Characteristics	Performance Limits	Conditions
RF OUTPUT		
Remote Programming Absolute Level Accuracy (+15 to +35 deg. C)	+/- 2.00 dB	2.0 - 6.6 GHz ≥-30 dBm output level range
	+/- 0.1 dB per 10 dB step	<-30 dBm output level range
	+/- 2.25 dB	6.6 - 12.3 GHz ≥-30 dBm output level range
	+/- 0.1 dB per 10 dB step	<-30 dBm output level range
	+/- 2.70 dB	12.3 - 18.6 GHz ≥-30 dBm output level range
	+/- 0.2 dB per 10 dB step	<-30 dBm output level range
	+/- 3.30 dB	18.6 - 26.0 GHz ≥-30 dBm output level range
	+/- 0.2 dB per 10 dB step	<-30 dBm output level range
Manual Absolute Level Accuracy	Add +/- 0.75 dB to remote programming absolute level accuracy	Absolute level accuracy specifications include allowances for detector linearity, temperature, flatness, attenuator accuracy, and measurement uncertainty

PERFORMANCE TESTS

DESCRIPTION: Low level accuracy (-30 dBm and below) is verified using a local oscillator and mixer to produce a 100 kHz IF signal. The IF signal is then amplified and its level read on a spectrum analyzer.

EQUIPMENT REQUIRED:

Power Meter	HP 436A
Power Meter Sensor	HP 8485A
Local Oscillator	HP 8673A
Mixer	RHG DM1-26
Spectrum Analyzer	HP 8556A/8552B/141T
40 dB Amplifier	HP 8447A Opt 001
20-dB Attenuator	Weinschel M9-20

PROCEDURE:

1. Calibrate and zero the power meter in the dBm mode.

2. Connect the equipment as shown in Figure 4-3.

NOTE
Connect the mixer directly to the local oscillator to avoid any power loss.

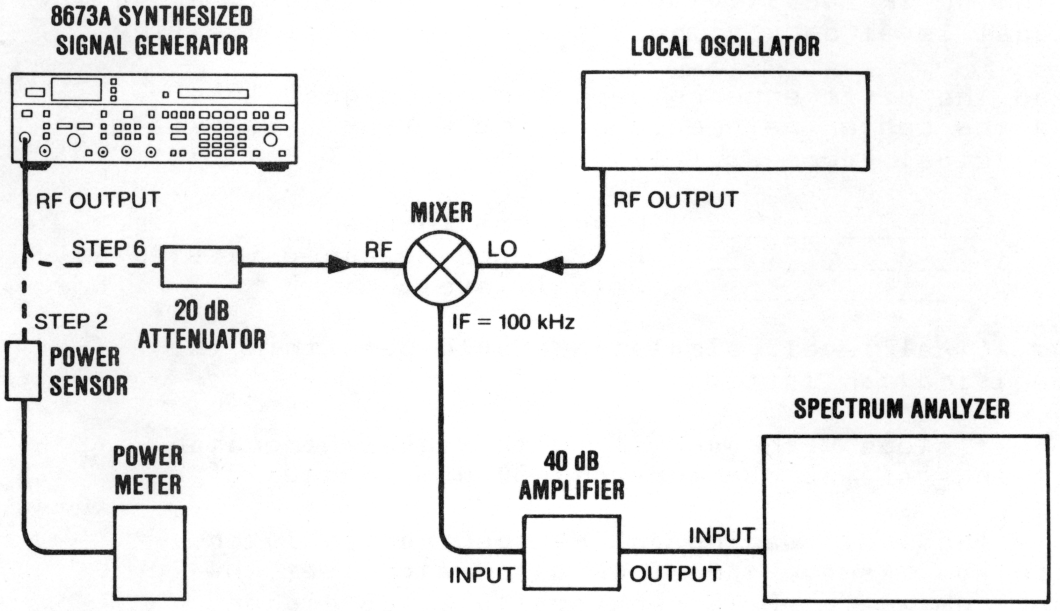

Figure 4-3. Low Level Accuracy Test Setup

PERFORMANCE TESTS

3. Set the Signal Generator frequency to 2.0 GHz, RANGE to −20 dBm, and set the VERNIER for 0 dB.

4. Peak the Signal Generator power with the AUTO PEAK key.

5. Adjust the VERNIER for a power meter reading of −20 dBm +− 0.01 dB.

6. Disconnect the power meter and connect the Signal Generator to the mixer as shown in Figure 4−3.

7. Set the local oscillator to a frequency 100 kHz +− 1 kHz higher than the Signal Generator setting in step 3. Set the local oscillator output power to maximum but not greater than +8 dBm.

8. Set the resolution bandwidth on the spectrum analyzer to 300 kHz or less. Set the vertical sensitivity so that the amplitude of the 100 kHz IF signal is set to the center horizontal graticule as a reference. This calibrates the center graticule line for an absolute reference power level of −20 dBm.

9. Set the range of the Signal Generator 10 dB lower and adjust the VERNIER for a meter reading of 0 dB.

10. Set the spectrum analyzer reference level 10 dB lower with the IF sensitivity control. This should bring the signal level back up near the center graticule line.

11. Read the difference between the new signal level and the center reference graticule line. Calculate the actual power as follows:

	_____	Level set in step 9.
+	_____	Difference measured in step 11.
	_____	Actual level.

The actual level calculated ahould be within the specification listed.

12. Repeat steps 9 through 11, with Signal Generator settings of −30 dBm through −50 dBm in step 3.

13. Note the last reading on the spectrum analyzer display. Remove the 20-dB attenuator, set the spectrum analyzer IF sensitivity 20 dB higher, and set the vertical sensitivity for the same reading.

PERFORMANCE TESTS

14. Repeat steps 9 through 11 with Signal Generator settings of −60 dBm through −90 dBm.

15. Repeat steps 9 through 12 at any desired frequency, or at any frequency of interest.

PERFORMANCE TESTS

4-10. HARMONICS, SUBHARMONICS, & MULTIPLES TESTS

SPECIFICATIONS:

Electrical Characteristics	Performance Limits	Conditions
SPECTRAL PURITY		
Harmonics	<--40 dBc	Up to 26 GHz; output level meter readings <=0 dB on 0 dBm range and below
Sub-harmonics and Multiples Thereof	<--25 dBc <--20 dBc	2.0 to 18.6 GHz 18.6 to 26.0 GHz

DESCRIPTION: In this test a spectrum analyzer is used to observe the amplitude of various harmonics of the Signal Generator. In the multiplied bands, subharmonics and multiples (harmonics of the unmultiplied signal) are checked. Reasonable care must be taken to assure that the harmonics being measured are not generated in the spectrum analyzer or external mixer.

Measurements are made directly, except for harmonics above 22 GHz, where an external mixer is used.

EQUIPMENT:
Spectrum Analyzer.....HP 8569A Opt H20
External Mixer .....HP 11517A Opt C02
Waveguide Taper Section.....HP 11519A
Adapter, WG-Coax.....HP K281C

PERFORMANCE TESTS

PROCEDURE:

1. Connect the Signal Generator RF OUTPUT to the input of the spectrum analyzer as shown in Figure 4-4.

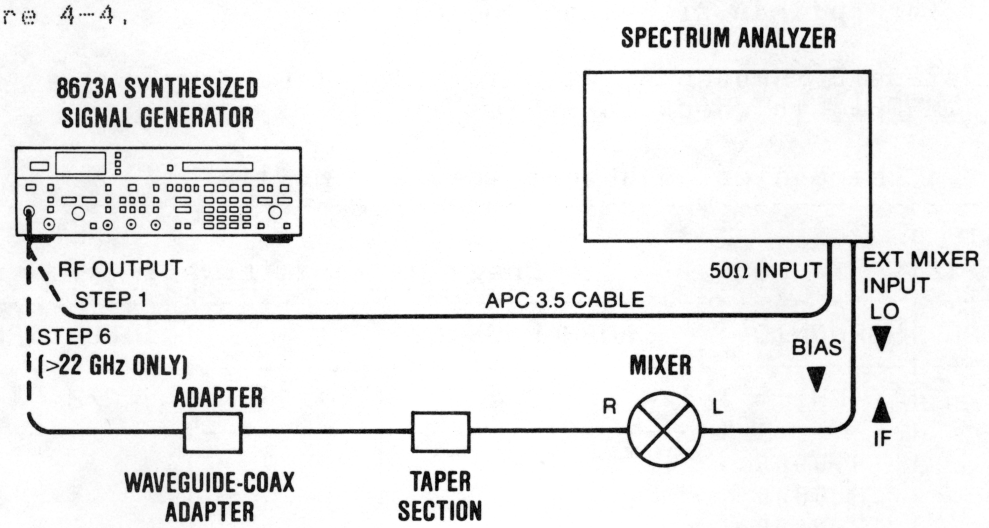

Figure 4-4. Harmonics, Subharmonics, and Multiples Test Setup

2. Set the Signal Generator to 4.000 GHz, RANGE to 0 dBm, and VERNIER to 0 dB.

3. Set the spectrum analyzer controls to display the fundamental signal. Set the resolution bandwidth to 10 kHz and the input attenuation to 40 dB. Adjust the log reference level to set the signal to the top graticule line of the display.

4. Tune the Signal Generator to 2.000 GHz. The second harmonic, now at 4.000 GHz, viewed on the analyzer display, should be greater than 40 dB below the reference.

5. Repeat steps 2 through 4, at the other Signal Generator frequencies listed, to check each harmonic, subharmonic, and multiple listed in the table below, except for harmonics that are above 22 GHz.

NOTE

This procedure may be repeated for any fundamental frequency of interest within the Signal Generator frequency range.

PERFORMANCE TESTS

6. Connect the equipment as shown in Figure 4-4 using the external mixer and adapter. Select the 14.5 to 26.6 GHz band on the spectrum analyzer, and adjust the bias current for optimum signal on the display.

7. Repeat steps 2 through 4, with the Signal Generator set to 12 GHz, to check harmonics at 24 GHz.

Harmonics, Subharmonics, and Multiples

Set Signal Generator to	Check Harmonic Levels at:						
FUNDAMENTAL	HARMONIC	SUBHARMONICS			MULTIPLES		
(GHz)	(GHz)	1/4	1/3	1/2	2/3	3/4	
2.0000	4.0000						
4.0000	8.0000						
6.0000	12.0000						
8.0000	16.0000			4.0000			
10.0000	20.0000			5.0000			
12.0000	24.0000			6.0000			
14.0000			4.6667		9.3333		
16.0000			5.3333		10.6667		
18.0000			6.0000		12.0000		
20.0000		5.0000		10.0000		15.0000	
22.0000		5.5000		11.0000		16.5000	
24.0000		6.0000		12.0000		18.0000	
26.0000		6.5000		13.0000		19.5000	
LIMITS	<-40 dBc		<-25 dBc 2.0 to 18.6 GHz				
			<-20 dBc above 18.6 GHz				

PERFORMANCE TESTS

4-11. NON-HARMONICALLY RELATED SPURIOUS SIGNALS (CW AND AM MODES) TESTS

SPECIFICATIONS:

Electrical Characteristics	Performance Limits	Conditions
SPECTRAL PURITY		
Spurious:		CW and AM modes
Non-harmonically Related	<-70 dBc	2.0 to 6.6 GHz
	<-64 dBc	6.6 to 12.3 GHz
	<-60 dBc	12.3 to 18.6 GHz
	<-58 dBc	18.6 to 26.0 GHz

DESCRIPTION: A spectrum analyzer, calibrated for -50 dBc, is tuned to any frequency from 2 to 26 GHz in search of spurious signals.

NOTE

The non-harmonically related spurious signals will always increase in amplitude above 6.6 GHz, due to multiplication in the internal YIG tuned multiplier. The increase is determined by a strict mathematical relationship. Therefore, satisfactory performance in the 2 to 6.6 GHz range will always ensure meeting the less stringent specification in the multiplied ranges, that is, from 6.6 to 26.0 GHz.

EQUIPMENT: Spectrum Analyzer..... HP 8569A Opt H20

PROCEDURE:

1. Connect the Signal Generator RF OUTPUT to the input of the spectrum analyzer as shown in Figure 4-5.

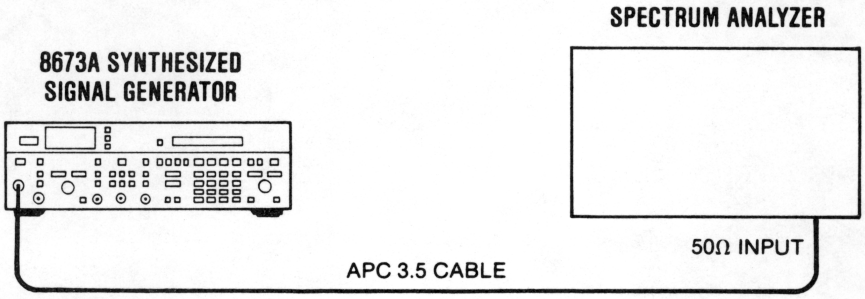

Figure 4-5. Non-Harmonically related Spurious (CW and AM Modes) Test Setup

PERFORMANCE TESTS

2. Set the Signal Generator to 3.000 GHz, RANGE to −50 dBm, and VERNIER to +3 dB.

3. Set the spectrum analyzer controls to display the fundamental signal. Set the resolution bandwidth to 1 kHz and the frequency span per division to 10 kHz.

4. Set the spectrum analyzer controls so that the carrier signal is at the top graticule line.

5. Increase the Signal Generator output to +3 dBm. Do not adjust the spectrum analyzer amplitude calibration. The top graticule line now represents −50 dBc.

6. Tune the spectrum analyzer to any desired frequency in search of non-harmonically related spurious signals. Verify that any signals found are non-harmonically related and are not generated by the spectrum analyzer. Verify that the spurious signals are below the specified limits. Record the results.

Carrier Frequency	Frequency of Spurious Signal	Level of Spurious Signal

7. Repeat steps 2 through 6 for any desired carrier frequency from 2 to 6.6 GHz. Record the results.

Carrier Frequency	Frequency of Spurious Signal	Level of Spurious Signal

PERFORMANCE TESTS

4-12. POWER LINE RELATED SPURIOUS SIGNALS TESTS

SPECIFICATIONS:

Electrical Characteristics	Performance Limits	Conditions
SPECTRAL PURITY		
Power line related and fan rotation related within 5 Hz below line frequencies and multiples thereof	--50 dBc	2.0 – 6.6 GHz <300 Hz offset from carrier
	--60 dBc	300 Hz to 1 kHz offset from carrier
	--65 dBc	>1 kHz offset from carrierr
	--44 dBc	6.6 – 12.3 GHz <300 Hz offset from carrier
	--54 dBc	300 Hz to 1 kHz offset from carrier
	--59 dBc	>1 kHz offset from carrier
	--40 dBc	12.3 – 18.6 GHz <300 Hz offset from carrier
	--50 dBc	300 Hz to 1 kHz offset from carrier
	--55 dBc	>1 kHz offset from carrier
	--38 dBc	18.6 – 26.0 GHz <300 Hz offset from carrier
	--48 dBc	300 Hz to 1 kHz offset from carrier
	--53 dBc	>1 kHz offset from carrier

PERFORMANCE TESTS

DESCRIPTION: The RF output of the Signal Generator is mixed with a local oscillator to obtain a 20 kHz IF signal. The line related sidebands are observed on a spectrum analyzer.

NOTE

The Signal Generator is isolated from vibration on a two-inch thick foam pad. The Signal Generator must be operated from a separate power line source (52 to 58 Hz) in order to differentiate its spurious signals from other line related spurious signals.

EQUIPMENT:

Local Oscillator	HP 8673A
Spectrum Analyzer (5 Hz–50 kHz)	HP 3580A
Mixer	RHG DM1–26
Variable Frequency AC Power Source	501TC/800T, California Instruments

PROCEDURE:

1. Place the Signal Generator on a 2-inch foam pad. Connect the equipment as shown in Figure 4-6.

NOTE

Connect the mixer directly to the local oscillator to avoid any power loss.

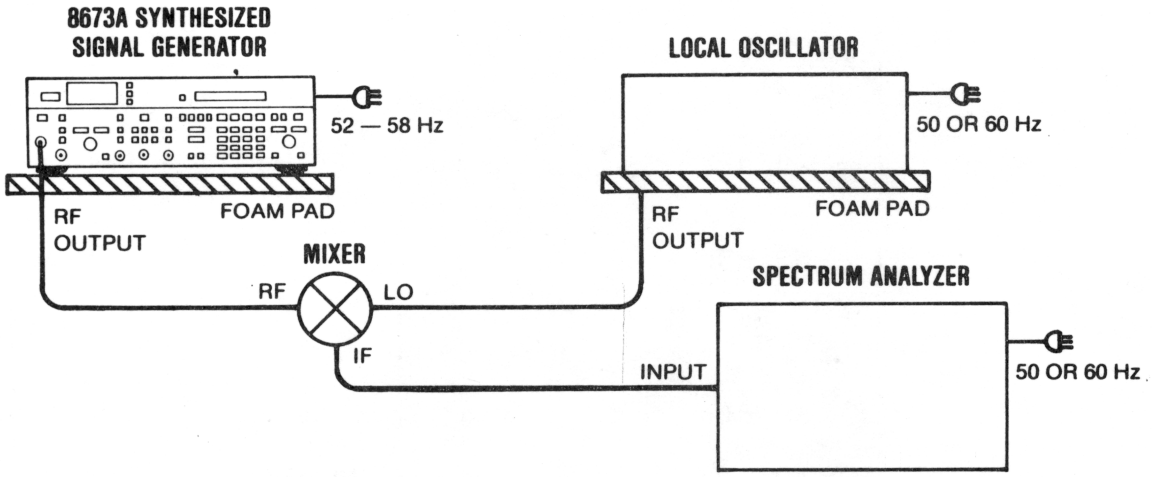

Figure 4-6. Power Line Related Spurious Signals Test Setup

2. Set the Signal Generator to 3000 MHz at −20 dBm with all modulation off.

3. Set the local oscillator to 3000.020 MHz at +7 dBm.

PERFORMANCE TESTS

4. Set the spectrum analyzer start frequency to 20 kHz, resolution bandwidth to 3 Hz.

5. Set the spectrum analyzer frequency span per division to 50 Hz. Set the spectrum analyzer controls so that the 20 kHz signal is at the top graticule line. Verify that the line related harmonics of the Signal Generator do not exceed the values shown below. Record the highest spurious signal level in each offset band.

2.0 - 6.6 GHz	<300 Hz offset	_____	-50 dBc
	300 Hz - 1 kHz offset	_____	-60 dBc

6. Set the spectrum analyzer frequency span per division to 500 Hz. Measure and record the highest spurious signal level.

2.0 - 6.6 GHz	>1 kHz offset	_____	-65 dBc

7. Set the Signal Generator and the local oscillator to 7000 MHz and 7000.020 MHz respectively.

8. Set the spectrum analyzer frequency span per division to 50 Hz. Set the spectrum analyzer controls so that the 20 kHz signal is at the top graticule line. Verify that the line related harmonics of the Signal Generator do not exceed the values shown in the table. Record the highest spurious signal level in each offset band.

6.6 - 12.3 GHz	<300 Hz offset	_____	-44 dBc
	300 Hz - 1 kHz offset	_____	-54 dBc

9. Set the spectrum analyzer frequency span per division to 500 Hz. Measure and record the spurious signal levels.

6.6 - 12.3 GHz	>1 kHz offset	_____	-59 dBc

10. Set the Signal Generator and the local oscillator to 16 000 MHz and 16 000.020 MHz respectively.

PERFORMANCE TESTS

11. Set the spectrum analyzer frequency span per division to 50 Hz. Set the spectrum analyzer controls so that the 20 kHz signal is at the top graticule line. Verify that the line related harmonics of the Signal Generator do not exceed the values shown in the table. Record the highest spurious signal level in each offset band.

12.3 - 18.6 GHz	<300 Hz offset	_____	-40 dBc
	300 Hz - 1 kHz offset	_____	-50 dBc

12. Set the spectrum analyzer frequency span per division to 500 Hz. Measure and record the spurious signal levels.

12.3 - 18.6 GHz	>1 kHz offset	_____	-55 dBc

13. Set the Signal Generator and the local oscillator to 20 000 MHz and 20 000.020 MHz respectively.

14. Set the spectrum analyzer frequency span per division to 50 Hz. Set the spectrum analyzer controls so that the 20 kHz signal is at the top graticule line. Verify that the line related harmonics of the Signal Generator do not exceed the values shown in the table. Record the highest spurious signal level in each offset band.

18.6 - 26.0 GHz	<300 Hz offset	_____	-38 dBc
	300 Hz - 1 kHz offset	_____	-48 dBc

15. Set the spectrum analyzer frequency span per division to 500 Hz. Measure and record the spurious signal levels.

18.6 - 26.0 GHz	>1 kHz offset	_____	-53 dBc

PERFORMANCE TESTS

4-13. SINGLE-SIDEBAND PHASE NOISE TESTS

SPECIFICATIONS:

Electrical Characteristics	Performance Limits	Conditions
SPECTRAL PURITY		
Single-sideband Phase Noise (1 Hz bandwidth; CW mode)	--58 dBc	2.0 - 6.6 GHz 10 Hz offset from carrier
	--70 dBc	100 Hz offset from carrier
	--78 dBc	1 kHz offset from carrier
	--86 dBc	10 kHz offset from carrier
	--110 dBc	100 kHz offset from carrier
	--52 dBc	6.6 - 12.3 GHz 10 Hz offset from carrier
	--64 dBc	100 Hz offset from carrier
	--72 dBc	1 kHz offset from carrier
	--80 dBc	10 kHz offset from carrier
	--104 dBc	100 kHz offset from carrier
	--48 dBc	12.3 - 18.6 GHz 10 Hz offset from carrier
	--60 dBc	100 Hz offset from carrier
	--68 dBc	1 kHz offset from carrier
	--76 dBc	10 kHz offset from carrier
	--100 dBc	100 kHz offset from carrier from carrier.

PERFORMANCE TESTS

SPECIFICATIONS (Continued):

Electrical Characteristics	Performance Limits	Conditions
SPECTRAL PURITY (Cont'd)		
Single-sideband Phase Noise (1 Hz bandwidth; CW mode)		18.6 - 26.0 GHz
	--46 dBc	10 Hz offset from carrier
	--58 dBc	100 Hz offset from carrier
	--66 dBc	1 kHz offset from carrier
	--74 dBc	10 kHz offset from carrier
	--98 dBc	100 kHz offset from carrier

DESCRIPTION: The RF outputs of the Signal Generator is mixed with a local oscillator to obtain a 40 kHz or 200 kHz IF signal. The noise sidebands are observed on a spectrum analyzer. Correction factors are applied to compensate for using the spectrum analyzer in the log mode, for local oscillator noise contributions, and for using bandwidths wider than 1 Hz.

NOTE

Normally, phase quadrature needs to be maintained between the Signal Generator and the local oscillator for true phase noise measurement. However, the additional amplitude noise components are so small that they are not significant in these tests.

EQUIPMENT:
Local Oscillator.....HP 8673A
Spectrum Analyzer (5 Hz-50 kHz)....HP 3580A
Spectrum Analyzer (20 Hz-300 kHz)..HP 8556A/8552B/141T
Mixer.....RHG DM1-26

NOTE

The signal-to-phase noise ratio as measured must be corrected to compensate for 3 errors contributed by the measurement system. These are:

PERFORMANCE TESTS

a. Using the spectrum analyzer in the log mode requires a +2.5 dB correction.

b. Equal noise contributed by the local oscillator requires a -3 dB correction.

c. The spectrum analyzer noise measurement must be normalized to a 1 Hz noise equivalent bandwidth The noise equivalent bandwidth for HP spectrum analyzers is 1.2 times the 3 dB bandwidth.

For a 3 Hz bandwidth, the correction factor for the normalized measurement bandwidth, would be:

Normalizing Factor dB = 10 log (1.2 X 3 Hz / 1 Hz)
= 5.56 dB.

The total correction for 3 Hz bandwidth would be:
True measurement (dBc) = Reading (dBc) - 5.56 + 2.5 - 3 = -6.06 dB

PROCEDURE:

1. Set the 5 Hz - 50 kHz spectrum analyzer's display to 40 kHz, bandwidth to 1 kHz, and frequency span per division to 5 Hz.

2. Connect the equipment as shown in Figure 4-7.

NOTE
Connect the mixer directly to the local oscillator to avoid any power loss.

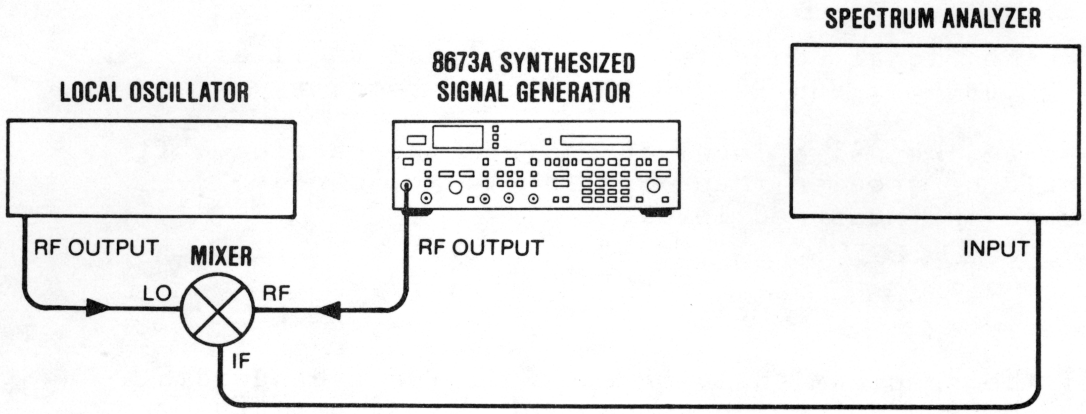

Figure 4-7. Single-Sideband Phase Noise Test Setup

PERFORMANCE TESTS

3. Set the Signal Generator to 6600 MHz at -20 dBm.

4. Set the local oscillator to 6599.960 MHz at +8 dBm.

5. Set the spectrum analyzer controls so that the peak of the 40 kHz signal is at the top graticule line.

6. Observe the noise level 10 Hz from the carrier. It should be greater than 58 dB below the carrier. Record the measured level.

   Measured _____
   Correction -1.30 dB
   Actual level _____

7. Set the Signal Generator and the local oscillator to 12 300 MHz and 12 299.960 MHz respectively.

8. Observe the noise level 10 Hz from the carrier. It should be greater than 52 dB below the carrier. Record the measured level.

   Measured _____
   Correction -1.30 dB
   Actual level _____

9. Set the Signal Generator and the local oscillator to 18 600 MHz and 18.599.960 MHz respectively.

10. Observe the noise level 10 Hz from the carrier. It should be greater than 48 dB below the carrier. Record the measured level.

    Measured _____
    Correction -1.30 dB
    Actual level _____

11. Set the Signal Generator and the local oscillator to 26 000 MHz and 25 999.960 MHz respectively.

12. Observe the noise level 10 Hz from the carrier. It should be greater than 46 dB below the carrier. Record the measured level.

    Measured _____
    Correction -1.30 dB
    Actual level _____

13. Set the spectrum analyzer controls for a bandwidth of 3 Hz and a frequency span per division of 20 Hz. Using a 3 Hz bandwidth requires a 6.06 dB correction factor.

PERFORMANCE TESTS

14. Repeat steps 3 through 12 except observe the noise 100 Hz from the carrier. Record the results. below.

Frequency	Limit	Measured	Correction	Actual
6600 MHz	-70 dBc	_____	-6.06 dB =	_____
12 300 MHz	-64 dBc	_____	-6.06 dB =	_____
18 600 MHz	-60 dBc	_____	-6.06 dB =	_____
26 000 MHz	-58 dBc	_____	-6.06 dB =	_____

15. For the remainder of the procedure, use the 20 Hz - 300 kHz spectrum analyzer. Set the spectrum analyzer bandwidth to 30 Hz and frequency span per division to 200 Hz. The 30 Hz bandwidth requires a 16.06 dB correction.

16. Set the Signal Generator and the local oscillator to 6600 MHz and 6599.800 MHz respectively.

17. Tune the spectrum analyzer to place the 200 kHz IF signal at the left edge of the display. Set the spectrum analyzer controls to place the peak of the signal at the top graticule line. Increase the log reference level control to move the peak of the carrier 20 dB above the top graticule line. (The top graticule line is now -20 dBc.)

18. Observe the noise level 1 kHz from the carrier. It should be greater than 78 dB below the carrier. Record the measured level.

Measured _____
Correction -16.06 dB
Actual level _____

19. Set the Signal Generator and the local oscillator to 13 300 MHz and 12 299.800 MHz respectively.

20. Observe the noise level 1 kHz from the carrier. It should be greater than 72 dB below the carrier. Record the measured level.

Measured _____
Correction -16.06 dB
Actual level _____

21. Set the Signal Generator and the local oscillator to 18 000 MHz and 17 999.800 MHz respectively.

PERFORMANCE TESTS

22. Observe the noise level 1 kHz from the carrier. It should be greater than 68 dB below the carrier. Record the measured level.

Measured _____
Correction -16.06 dB
Actual level _____

23. Set the Signal Generator and the local oscillator to 26 000 MHz and 25 999.800 MHz respectively.

24. Observe the noise level 1 kHz from the carrier. It should be greater than 66 dB below the carrier. Record the measured level.

Measured _____
Correction -16.06 dB
Actual level _____

25. Set the spectrum analyzer controls for a bandwidth of 300 Hz and a frequency span per division of 2 kHz. Using a 300 Hz bandwidth requires a 26.06 dB correction factor.

26. Repeat steps 16 through 24 except observe the noise 10 kHz from the carrier. Record the results below.

Frequency	Limit	Measured	Correction		Actual
6600 MHz	-86 dBc	_____	-36.06 dB	=	_____
12 300 MHz	-80 dBc	_____	-36.06 dB	=	_____
18 600 MHz	-76 dBc	_____	-36.06 dB	=	_____
26 000 MHz	-74 dBc	_____	-36.06 dB	=	_____

27. Set the spectrum analyzer controls for a bandwidth of 3 kHz and a frequency span per division of 20 kHz. Using a 3 kHz bandwidth requires a 36.06 dB correction factor.

28. Repeat steps 16 through 24 except observe the noise 10 kHz from the carrier. Record the results below.

Frequency	Limit	Measured	Correction		Actual
6600 MHz	-110 dBc	_____	-36.06 dB	=	_____
12 300 MHz	-100 dBc	_____	-36.06 dB	=	_____
18 600 MHz	-100 dBc	_____	-36.06 dB	=	_____
26 000 MHz	-98 dBc	_____	-36.06 dB	=	_____

PERFORMANCE TESTS

4-14. AMPLITUDE MODULATION TESTS

SPECIFICATIONS:

Electrical Characteristics	Performance Limits	Conditions
AMPLITUDE MODULATION		
Depth (+15 to +35 deg. C)	0 to 75%	2.0 to 18.0 GHz; 0 dBm maximum carrier level
	0 to 75%	18.0 to 24.0 GHz; --3 dBm maximum carrier level
	0 to 50%	24.0 to 26.0 GHz; --5 dBm maximum carrier level
Rates	20 Hz to 100 kHz	3 dB bandwidth, 30% depth
Sensitivity (% AM per Vpk)	30%/V and 100%/V ranges	Maximum input 1 Vpk into 600 ohms nominal; AM depth is linearly controlled by varying input level between 0 and 1V peak
Indicated Meter Accuracy	+/- 7% of reading +/- 3% of range	100 Hz to 10 kHz rates
Accuracy Relative to External AM Input Level	+/- 4% of reading +/- 2% of range	100 Hz to 10 kHz rates
Incidental Phase Modulation (100 Hz to 10 kHz rates; 30% depth)	<0.4 radians <0.8 radians <1.2 radians <1.6 radians <2.0 radians	2.0 to 6.6 GHz 6.6 to 12.3 GHz 12.3 to 18.6 GHz 18.6 to 24.0 GHz 24.0 to 26.0 GHz
Incidental FM	Incidental phase modulation x fmod	

PERFORMANCE TESTS

DESCRIPTION:

The Signal Generator under test is amplitude modulated with an audio source and mixed down with a local oscillator to produce a modulated 500 MHz IF. The AM depth, accuracy and incidental phase modulation are then measured on the modulation analyzer. The detected audio output from the modulation analyzer is then measured using an audio analyzer. A 0dB reference is stored at 1 kHz rate, and the rate stepped from 20 Hz to 100 kHz to measure the AM Bandwidth.

EQUIPMENT:

Local Oscillator	HP 8673A
Mixer	RHG DM1-26
Audio Analyzer and Source	HP 8903A
Modulation Analyzer	HP 8901A
Attn Pad, 6 dB	Weinschel M9-6

1. Connect equipment as shown in Figure 4-8.

NOTE

Connect the mixer directly to the local oscillator to avoid any power loss.

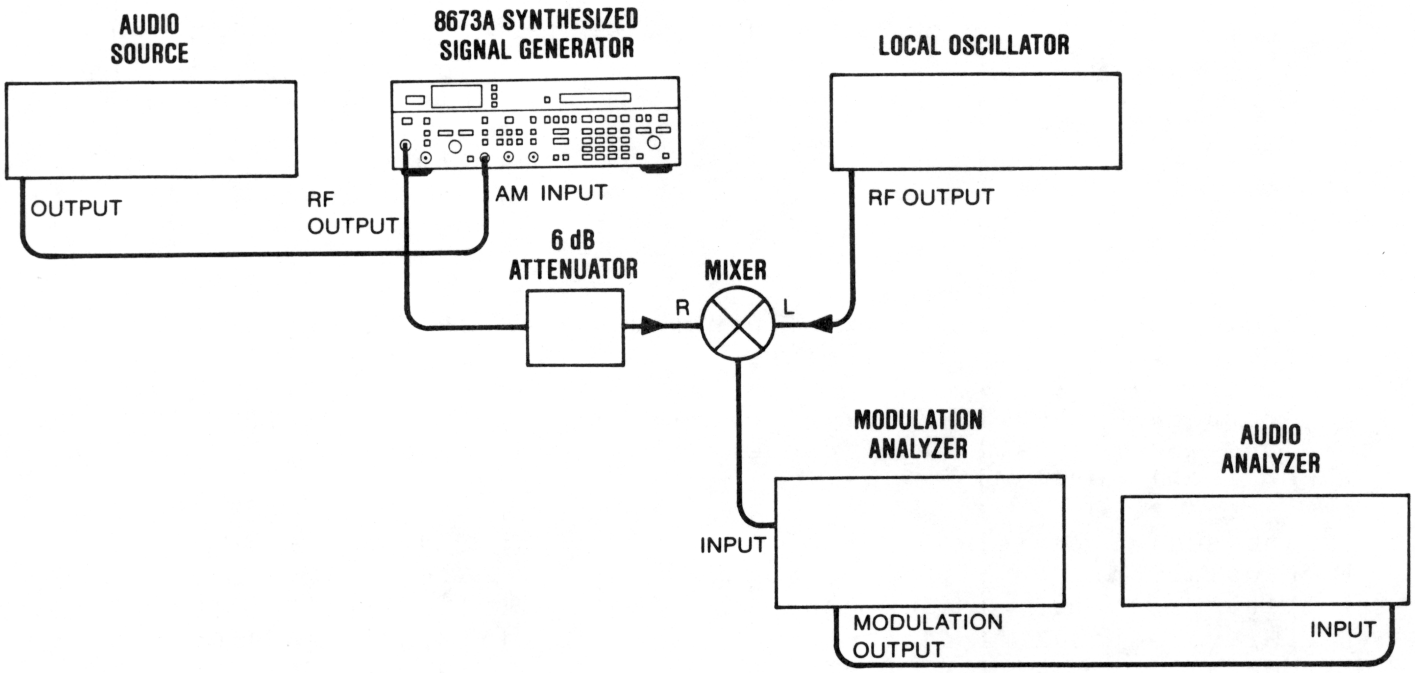

Figure 4-8. AM Modulation Test Setup

PERFORMANCE TESTS

PROCEDURE: Meter Accuracy

2. Set the Signal Generator under test to 0 dBm at 6.6 GHz frequency, internal ALC, AM to 100% range, and FM off.

3. Set the local oscillator to 5.7 GHz at +8 dBm with all modulation off.

4. Select AM mode on modulation analyzer.

5. Set the audio source to 1 kHz, and output level to approximately 0.35V rms. Fine tune the level to achieve 50% AM as read on modulation analyzer.

6. The AM meter should indicate 50% AM +/- 6.5% on the instrument under test.

PROCEDURE: Accuracy Relative to Ext AM Input

7. Set the audio source to 10 kHz frequency and 0.530V rms. This corresponds to 75% AM depth.

8. Read the actual AM depth on the modulation analyzer. Complete the remainder of the table below and ensure all measurement data points are within the specified limits.

Signal Generator Frequency	Local Oscillator Frequency	Modulation Rate	AM Depth	Low Limit	Actual Depth	High Limit
6.6 GHz	6.1 GHz	10 kHz	75%	70%	_____	80%
6.6 GHz	6.1 GHz	1 kHz	75%	70%	_____	80%
6.6 GHz	6.1 GHz	.1 kHz	75%	70%	_____	80%
10 GHz	9.5 GHz	10 kHz	75%	70%	_____	80%
14 GHz	13.5 GHz	10 kHz	75%	70%	_____	80%
18.6 GHz	18.1 GHz	10 kHz	75%	70%	_____	80%
22 GHz	21.5 GHz	10 kHz	75%	70%	_____	80%

9. Set the audio source level to 0.354V rms and perform the measurement below.

26 GHz	25.5 GHz	10 kHz	50%	71%	_____	79%

PERFORMANCE TESTS

PROCEDURE: Incidental Phase modulation

10. Set the Signal Generator under test to 0 dBm at 6.2 GHz internal leveling, AM to 100% range, and FM off.

11. Set the local oscillator to 5.7 GHz at +8 dBm with all modulation off.

12. Select AM mode on modulation analyzer.

13. Set audio source to 10 kHz and output level to obtain 30% AM.

14. Press the Phase Mod key on the modulation analyzer. The incidental phase modulation should be less than 0.4 radians. Complete the remainder of the measurements in the table below.

Signal Generator		Local Oscillator		Incidental Phase Modulation	
Frequency	Level	Frequency	Level	Limit	Actual
6.2 GHz	0 dBm	5.7 GHz	+8 dBm	<0.4 radians	_____
12.3 GHz	0 dBm	11.8 GHz	+8 dBm	<0.8 radians	_____
18.0 GHz	0 dBm	17.5 GHz	+8 dBm	<1.2 radians	_____
24.0 GHz	-5 dBm	23.5 GHz	0 dBm	<1.6 radians	_____
26.0 GHz	-5 dBm	25.5 GHz	0 dBm	<2.0 radians	_____

PROCEDURE: AM Rates

15. Connect the modulation analyzer detected audio output to the input of the audio analyzer.

16. Set the Signal Generator to 0 dBm at 4 GHz, Internal ALC, AM to 100% range, FM off.

17. Set the local oscillator to 3.5 GHz at +8dBm with all modulation off.

18. Select AM mode on the modulation analyzer.

19. Set the audio source to 1 kHz rate, at a level of 0.212V rms. This corresponds to 30% AM modulation depth.

PERFORMANCE TESTS

20. Set audio analyzer to read the amplitude of the input signal.

21. Set the audio analyzer to the dB relative mode using the input signal from the modulation analyzer as a 0dB reference.

22. Set the audio source to 20 Hz and step the frequency up to 100 kHz. Ensure that the input signal level as read on the audio analyzer does not decrease more than -3dB from the reference at any frequency from 20Hz to 100 kHz.

23. Repeat steps 5 thru 7 for the frequencies and levels listed below.

Signal Generator Frequency	Signal Generator Level	Local Oscillator Frequency	AM Depth	Modulation Level Frequency	Modulation Level Change
4.0 GHz	0dBm	3.5 GHz	30%	_____	_____
6.7 GHz	0dBm	6.2 GHz	30%	_____	_____
15.0 GHz	0dBm	14.5 GHz	30%	_____	_____
24.0 GHz	-3dBm	23.5 GHz	30%	_____	_____
26.0 GHz	-5dBm	25.5 GHz	30%	_____	_____

PERFORMANCE TESTS

4-15. FM FREQUENCY RESPONSE TESTS

SPECIFICATIONS:

Electrical Characteristics	Performance Limits	Conditions
FREQUENCY MODULATION		
Frequency Response Relative to a 100 kHz Rate	+/- 2 dB	100 Hz to 3 MHz, 30 and 100 kHz/V ranges
	+/- 2 dB	3 kHz to 3 MHz, 0.3, 1, 3, and 10 MHz/V ranges

DESCRIPTION: The test oscillator is tuned to 100 kHz and the output level is adjusted to obtain a Bessel (first carrier) null (2.404). The output level and the 100 kHz rate are the references for later calculations. At other modulation rates, the output level is set and measured for the first carrier null. The measured voltage and the rate are then compared to the established reference to determine frequency response.

EQUIPMENT:
Spectrum Analyzer.....HP 8569A Opt H20
Test Oscillator..... HP 651B
Frequency Counter ..... HP 5343A
AC Voltmeter..... HP 400E

PROCEDURE: 1. Connect the equipment as shown in Figure 4-9.

PERFORMANCE TESTS

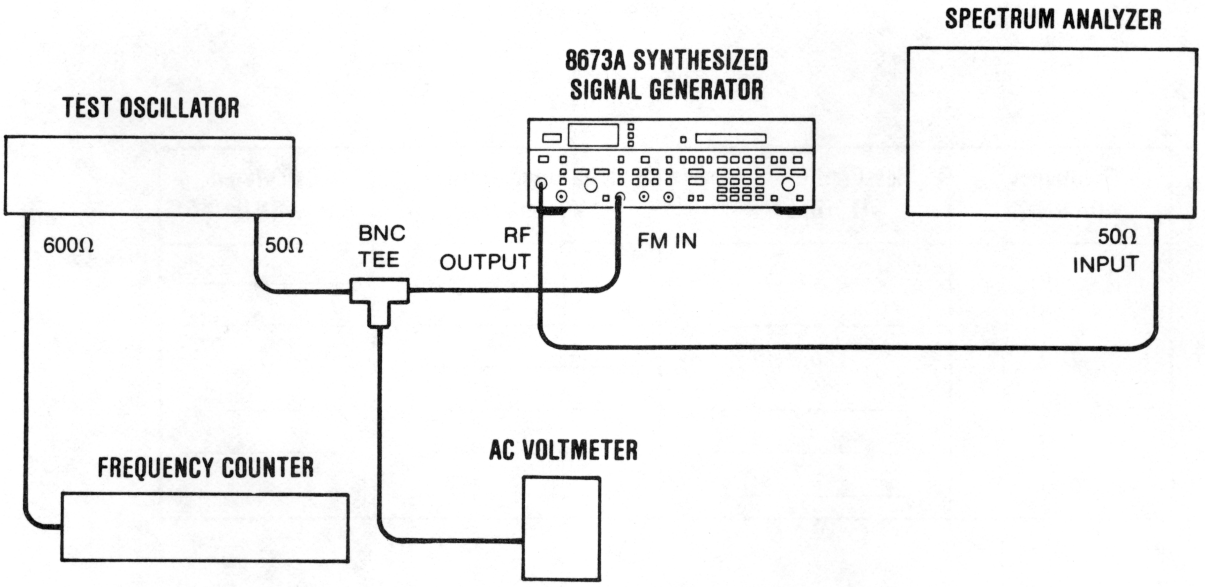

Figure 4-9. FM Frequency Response Test Setup

2. Set the Signal Generator to 4 GHz at 0 dBm. Adjust the spectrum analyzer controls to display the RF signal. Set the frequency span per division to 100 kHz. Set other controls as needed for a calibrated display.

3. Set FM DEVIATION to 10 MHz. Tune the test oscillator to 100 kHz +/− 1 kHz.

4. Adjust the test oscillator voltage to obtain the first carrier null. The voltage should be about 0.017 Vrms. Record the voltmeter reading in the following table.

5. Tune the test oscillator to 3 kHz and adjust the output voltage to obtain the first carrier null. Record the measured frequency and voltage in the table.

PERFORMANCE TESTS

6. Repeat step 5 for each of the remaining frequencies in the table.

Frequency (in kHz)	Measured Frequency (f_x; in kHz)	Measured Voltage V_x (mVrms)	Calculated Response (in dB)
3	_____	_____	_____
30	_____	_____	_____
100	100.0	_____	0
300	_____	_____	_____
1000	_____	_____	_____
3000	_____	_____	_____

7. Use the following equation to calculate FM frequency response:

$$dB = 20 \log \frac{V_x}{V_{100\ kHz}} - 20 \log \frac{f_x}{100\ kHz}$$

where dB = the calculated frequency response

V_x = the voltage measured at f_x

$V_{100\ kHz}$ = the reference voltage measured at 100 kHz

f_x = the measured frequency.

PERFORMANCE TESTS

4-16. FM INPUT AND METER ACCURACY TESTS

SPECIFICATIONS:

Electrical Characteristics	Performance Limits	Conditions
FREQUENCY MODULATION		
Maximum Peak Deviation	The smaller of 10 MHz or fmod x 5	2.0 to 6.6 GHz
	The smaller of 10 MHz or fmod x 10	6.6 to 12.3 GHz
	The smaller of 10 MHz or fmod x 15	12.3 to 18.6 GHz
	The smaller of 10 MHz or fmod x 20	18.6 to 26.0 GHz
Sensitivity (peak deviation per Vpk)	Maximum input 1 Vpk into 50 ohms nominal	All ranges; peak deviation is linearly controlled by varying input level between 0 and 1 Vpk
Indicated Meter Accuracy	+/- 12% of reading +/- 3% of range	100 kHz rate
Accuracy Relative to External FM Input Level	+/- 7% of reading +/- 3% of range	100 kHz rate

DESCRIPTION:

The output of the Signal Generator is mixed with a local oscillator to produce a 500 MHz IF signal. A modulation analyzer measures the FM characteristics of the IF signal.

EQUIPMENT:

Modulation Analyzer	HP 8901A
Test Oscillator	HP 651B
Mixer	RHG DM 1-26
Local Oscillator	HP 8673A
Digital Voltmeter	HP 3455A
Frequency Counter	HP 5340A

PERFORMANCE TESTS

PROCEDURE: 1. Connect the equipment as shown in Figure 4-10.

NOTE
Connect the mixer directly to the local oscillator to avoid any power loss.

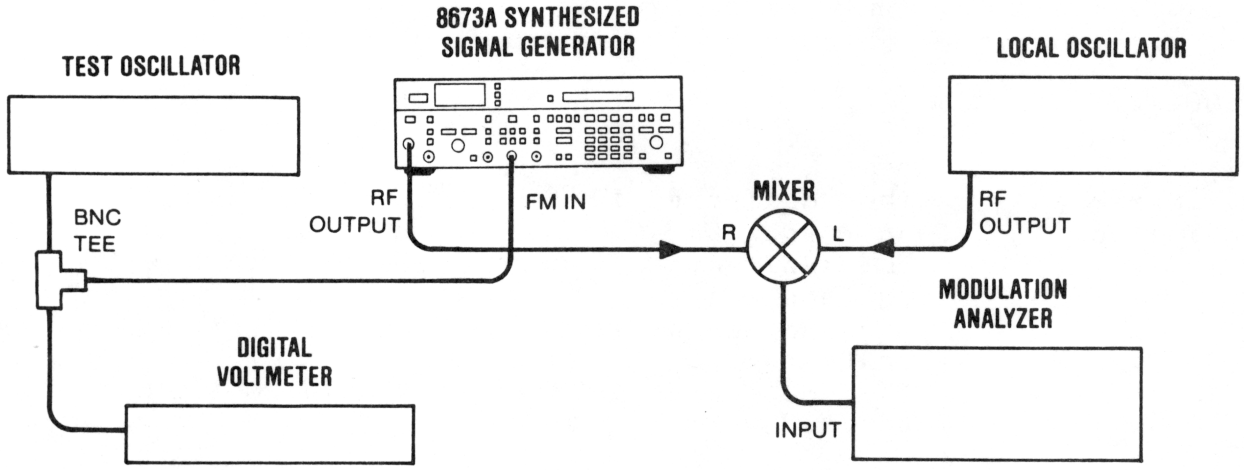

Figure 4-10. FM Input and Meter Accuracy Test Setup

2. Set the instrument under test to -5dBm at 2 GHz and the LO to 8dBm at 2.5 GHz. Press the frequency key on the modulation analyzer to verify that the IF is 500 MHz. (The actual IF used is not critical but merely verifies that the setup is working.)

3. Set the test oscillator to 100 kHz rate. Adjust the output level to approximately 0.707 Vrms.

Sensitivity and Meter Accuracy

4. Set the modulation analyzer to measure FM. Set the Signal Generator FM DEVIATION to 0.3 MHz. Adjust the test oscillator level to obtain full scale on the front panel meter. The modulation analyzer should read 300 +/-45 kHz deviation.

5. Adjust test oscillator level to obtain 50 kHz deviation as read on the Signal Generator meter.

6. The modulation analyzer should read 50 kHz +/-15 kHz deviation.

PERFORMANCE TESTS

FM OVERMOD Test

7. Set the Signal Generator FM DEVIATION to 10 MHz. Set the test oscillator to 2 MHz and 0.707V rms. The front panel FM OVERMOD anunciator should be off.

Accuracy Relative to External FM Input

8. Set the test oscillator to 100 kHz and 0.707 Vrms.

9. Set the Signal Generator FM DEVIATION to 0.3 MHz. The modulation analyzer should indicate deviation within the limits listed below.

FM	Test Oscillator Level (Vrms)	Set Deviation	Low Limit	Measured Deviation	High Limit
.03 MHz	.707 Vrms	30 kHz	27 kHz	_____	33 kHz
.1 MHz	.707 Vrms	100 kHz	90 kHz	_____	110 kHz
.3 MHz	.707 Vrms	300 kHz	270 kHz	_____	330 kHz
1 MHz	.212 Vrms	300 kHz	249 kHz	_____	351 kHz

10. Select each FM DEVIATION shown in the table and set the level of test oscillator to the specified level. Verify that the actual deviation is within the specified limits for each range.

11. Set the Signal Generator FM DEVIATION to 0.3 MHz. Set the Signal Generator to 6.7 GHz and the local oscillator to 7.2 GHz. Verify that the measured deviation is within the limits shown below.

12. Repeat step 11 for the other two Signal Generator and local oscillator frequencies listed below.

Signal Generator Frequency	Local Oscillator Frequency	Low Limit	Actual Deviation	High Limit
6.7 GHz	7.2 GHz	270 kHz	_____	330 kHz
12.4 GHz	12.9 GHz	270 kHz	_____	330 kHz
18.7 GHz	19.2 GHz	270 kHz	_____	330 kHz

PERFORMANCE TESTS

4-17. INCIDENTAL AM TESTS

SPECIFICATIONS:

Electrical Characteristics	Performance Limits	Conditions
FREQUENCY MODULATION		
Incidental AM	<5%	Rates <100 kHz; peak deviations <= 1 MHz

DESCRIPTION: A reference is established by modulating the Signal Generator at 5% AM (the maximum allowable incidental AM). The detected signal is measured with a voltmeter. Then the Signal Generator is frequency modulated and the detected AM level is compared to the reference level.

EQUIPMENT:
Digital Voltmeter.....HP 3455A
Test Oscillator..... HP 651B
Crystal Detector..... HP 8473C
50 Ohm Termination..... HP 11593A

PROCEDURE: 1. Connect the equipment as shown in Figure 4-11.

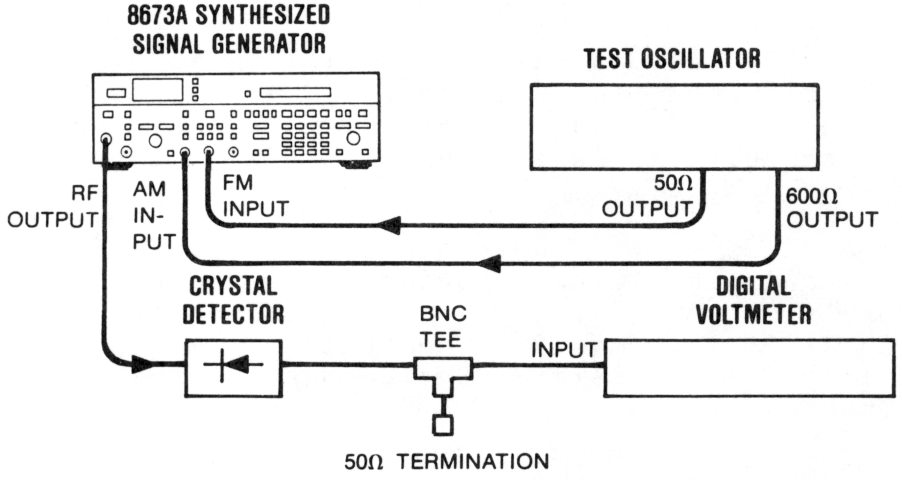

Figure 4-11. Incidental AM Test Setup

2. Set the Signal Generator to 2 GHz at 0 dBm. Select the 30% AM modulation range.

PERFORMANCE TESTS

3. Set the test oscillator to 10 kHz, and adjust the output for a 5% AM modulation reading on the Signal Generator.

4. Record the detected level of AM as indicated by the digital voltmeter.

   Reference Level _____ Vrms

5. Set the Signal Generator to AM OFF and set FM DEVIATION to the 1 MHz range.

6. Set the test oscillator frequency to 100 kHz.

7. Vary the test oscillator amplitude between 0 and 0.5 Vrms. Verify that the voltmeter reading is less than the level recorded in step 4. Record the level.

   2.0 GHz: _____ Vrms

8. Set the Signal Generator to 6.7 GHz at 0 dBm. Vary the test oscillator amplitude between 0 and 0.707 Vrms. Verify that the voltmeter reading does not exceed the level recorded in step 4. Record the maximum level.

   6.7 GHz: _____ Vrms

9. Repeat step 8 for Signal Generator frequencies of 12.4 GHz and 18.7 GHz.

   12.4 GHz: _____ Vrms
   18.7 GHz: _____ Vrms

PERFORMANCE TESTS

4-18. PULSE TESTS

SPECIFICATIONS:

Electrical Characteristics	Performance Limits	Conditions
PULSE MODULATION		
ON/OFF Ratio	>80 dB	
Rise and Fall Times	<35 ns	AUTO PEAK enabled
Minimum Leveled RF Pulse Width	<100 ns	
Pulse Repetition Frequency	dc to 1 MHz	
Minimum Duty Cycle	<0.0001	When internally leveled; no restriction when unleveled
Minimum Pulse Off Time	<300 ns	
Maximum Peak Power	Same as in CW mode	
Peak Level Accuracy	+/- 1.0 dB	Relative to CW; +15 to +35 deg. C
Overshoot, Ringing	<0.2	2.0 to 6.6 and 6.7 to 26.0 GHz
	<0.25	6.6 to 6.7 GHz

DESCRIPTION: The pulse tests are performed in three parts. The first part tests rise time, fall time, overshoot and ringing. In this test, the pulse modulated output of the Signal Generator is mixed with a local oscillator using a double balanced mixer. The resulting 50 MHz IF signal is amplified and viewed on an oscilloscope to determine pulse performance.

The second part tests peak level accuracy.

PERFORMANCE TESTS

The output of the Signal Generator is switched between CW and pulse modulation mode using the CW level as a reference. The difference in level between the two modes represents the Peak Level Accuracy error.

The third part tests the on/0ff ratio. A spectrum analyzer is used to measure the change in power output when the pulse modulator is switched from normal mode to complement mode.

EQUIPMENT:

Local Oscillator	HP 8673A
Pulse Generator	HP 8013B
Oscilloscope	HP 1715A
26 dB RF Amplifier	HP 8447D
Mixer	RHG DMS1-26
Spectrum Analyzer	HP 8569A Opt H20
Variable Step Attn	HP 8495D Opt 004
Attenuator, 3 dB	HP 8491A Opt 003
Attenuator, 6 dB	Weinschel M9-6

PROCEDURE:

1. Connect equipment as shown in Figure 4-12.

NOTE

Make sure there are no sharp bends in the the cable, and that all connections are are tight. This will minimize distortion of the pulse shape, and thus give more accurate measurements.

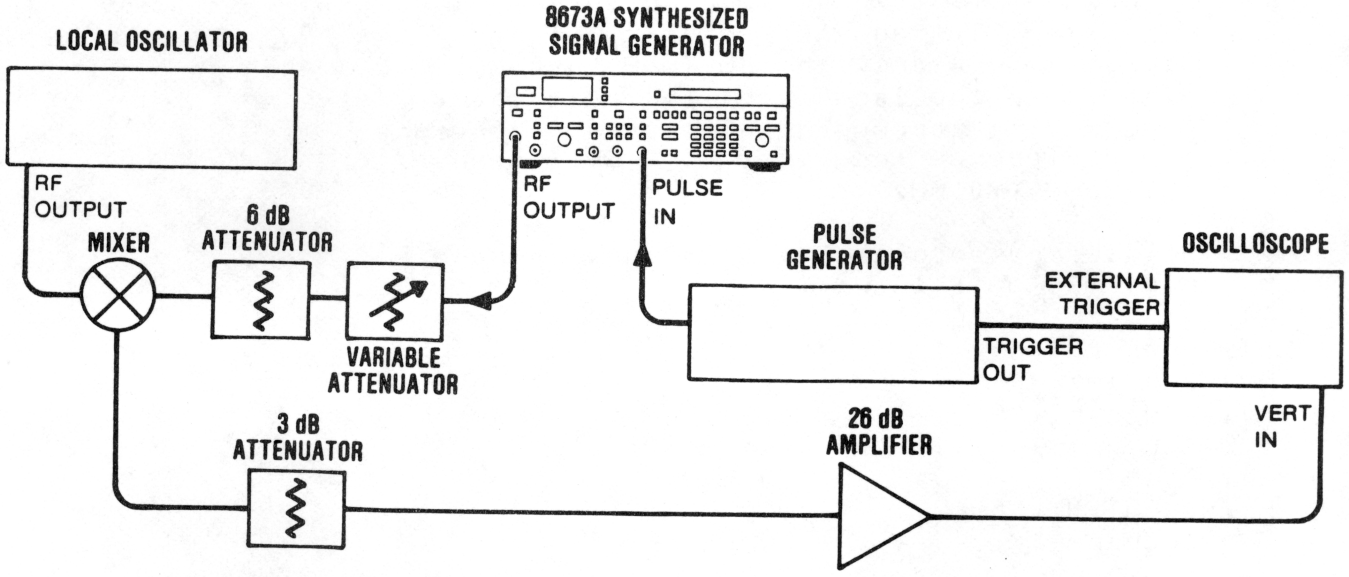

Figure 4-12. Pulse Shape Tests Setup

PERFORMANCE TESTS

2. Set the variable step attenuator for 20 dB.

3. Press RCL 0 on the Signal Generator and on the local oscillator. Set equipment controls as follows:

Signal Generator:

OUTPUT LEVEL	+8 dBm
PULSE	NORMAL
SWEEP FREQ START	2000 MHz
SWEEP FREQ STOP	6600 MHz
SWEEP FREQ INCR	10 MHz
HPIB Address	50

Local Oscillator:

Power Level	+8 dBm
Sweep Start Frequency	2070 MHz
Sweep Start Frequency	6670 MHz
Sweep Frequency Increment	10 MHz
HPIB Address	40

4. The TLK anunciator should be lighted on the Signal Generator, indicating that it will "talk" to, or control, the local oscillator. The LSN anunciator should be lighted on the local oscillator indicating that it will "listen" to, or follow, commands from the Signal Generator. This is referred to as the Master/Slave mode of operation.

5. Set SWEEP MODE to MANUAL on the Signal Generator. Both MANUAL and SINGLE anunciators should be lighted on the Signal Generator. Tuning the frequency of the Signal Generator with the TUNE knob will also cause the local oscillator to change frequency a corresponding amount. Therefore the difference frequency (IF) will remain the same (70 MHz).

6. Set the pulse generator and oscilloscope controls as follows:

Pulse Generator:

Pulse Rate	1 MHz
Pulse Width	120 ns
+ Output	Norm
Int Load	Out
Pulse OUTPUT LEVEL	5V Peak
Double/Norm	Norm

PERFORMANCE TESTS

Oscilloscope:

Vert Display	Channel A, 50ohms
Time/Div Main	0.2 us
Time/Div Delayed	20 ns
Vertical Sensitivity	0.02 V/div.
Trigger	External DC Coupled
Sweep	Mixed

7. Adjust the sweep delay on the oscilloscope to center the modulated 70 MHz RF pulse. Adjust the vertical controls for a 5 division peak pulse display. See Figure 4-13.

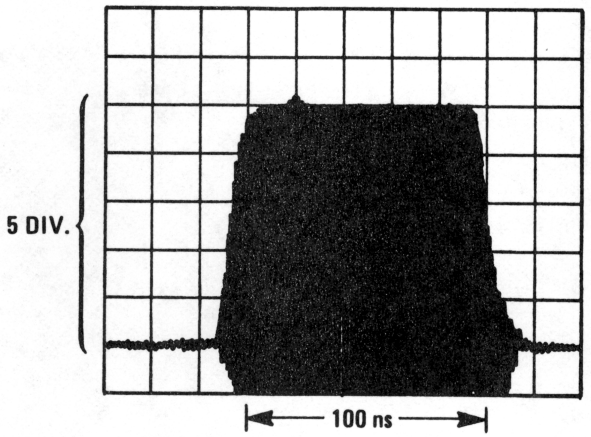

Figure 4-13. Risetime, Falltime, Overshoot and Ringing Measurement

8. Tune the Signal Generator to 2000.000 MHz. The local oscillator should track the Signal Generator frequency with a 70 MHz offset.

9. Measure the pulse rise time, fall time, overshoot and ringing. Record the results.

Rise Time (10% to 90%)	_____	35 ns
Fall Time (10% to 90%)	_____	35 ns
Overshoot and ringing	_____	20%

10. Tune the Signal Generator to 6600.000 MHz. Measure the pulse rise time, fall time, overshoot and ringing. Record the results.

Rise Time (10% to 90%)	_____	35 ns
Fall Time (10% to 90%)	_____	35 ns
Overshoot and ringing	_____	20%

PERFORMANCE TESTS

11. Scan the entire frequency band from 2 to 6.6 GHz. Ensure that rise time, fall time, overshoot, and ringing are within the specified limits at power levels of -10 dBm, 0 dBm, and maximum power for all frequencies within this range. Record the worst case results.

Signal Generator FREQUENCY (GHz)	OUTPUT RANGE	LEVEL VERNIER	Variable Attenuator	Rise (ns)	Fall (ns)	Overshoot and Ringing (%)
_____	_____	_____	_____	_____	_____	_____
_____	_____	_____	_____	_____	_____	_____

NOTE

As the frequency band is scanned using the TUNE control on the Signal Generator, the peak level of the pulse displayed on the oscillosope may vary several divisions in amplitude, due to measurement system variations. To compensate for this, adjust the vertical sensitivity controls on the oscilloscope to maintain a constant 5-division peak amplitude while making measurements

12. Set the SWEEP FREQ START to 6600.002 MHz on the Signal Generator. Set the sweep FREQ STOP to 12300.000 MHz.

13. Set the sweep start frequency to 6670.000 MHz on the local oscillator and the sweep stop frequency to 12370.000 MHz.

PERFORMANCE TESTS

14. Tune the Signal Generator to each frequency shown in the table below. Set the OUTPUT LEVEL, RANGE, and VERNIER as shown for each frequency. Measure rise time, fall time, overshoot and ringing at each frequency. The results must be within the specifications listed below. Record the results.

FREQUENCY (GHz)	OUTPUT LEVEL RANGE	VERNIER	Variable Attenuator	Rise (ns)	Fall (ns)	Overshoot and Ringing (%)	
6600.002	+10 dBm	−2 dB	20 dB	_____	_____	_____	_____
6600.002	0 dBm	0 dB	20 dB	_____	_____	_____	_____
6600.002	0 dBm	−10dB	10 dB	_____	_____	_____	_____
6700.002	+10 dBm	−2 dB	20 dB	_____	_____	_____	_____
6700.002	0 dBm	0 dB	20 dB	_____	_____	_____	_____
6700.002	0 dBm	−10dB	10 dB	_____	_____	_____	_____
12290.002	+10 dBm	−2 dB	20 dB	_____	_____	_____	_____
12290.002	0 dBm	0 dB	20 dB	_____	_____	_____	_____
12290.002	0 dBm	−10dB	10 dB	_____	_____	_____	_____

15. Scan the entire band from 6.6 GHz to 12.3 GHz. Ensure that rise time, fall time, overshoot, and ringing are within the specified limits at power levels of −10 dBm, 0 dBm, and maximum power for all frequencies within this range. Record the worst case results.

Signal Generator FREQUENCY (GHz)	OUTPUT LEVEL RANGE	VERNIER	Variable Attenuator	Rise (ns)	Fall (ns)	Overshoot and Ringing (%)
_____	_____	_____	_____	_____	_____	_____
_____	_____	_____	_____	_____	_____	_____

16. Set the SWEEP FREQ START to 12300.003 MHz on the Signal Generator. Set the SWEEP FREQ STOP to 18600.000 MHz.

17. Set the sweep start frequency to 12370.000 MHz on the Local Oscillator and the sweep stop frequency to 18670.000 MHz.

PERFORMANCE TESTS

18. Tune the Signal Generator to each frequency shown in the table below. Set the Output Level, Level Vernier, and Variable step Attenuator to the values shown at each frequency. Measure rise time, fall time, overshoot and ringing at each setting and compare to the limits listed in step 10. Record the measurements.

FREQUENCY (GHz)	OUTPUT LEVEL RANGE	VERNIER	Variable Attenuator	Rise (ns)	Fall (ns)	Overshoot and Ringing (%)	
12300.003	+10 dBm	−2 dB	20 dB	_____	_____	_____	_____
12300.003	0 dBm	0 dB	20 dB	_____	_____	_____	_____
12300.003	0 dBm	−10 dB	10 dB	_____	_____	_____	_____
17990.003	+10 dBm	−2 dB	20 dB	_____	_____	_____	_____
17990.003	0 dBm	0 dB	20 dB	_____	_____	_____	_____
17990.003	0 dBm	−10 dB	10 dB	_____	_____	_____	_____
18590.004	+10 dBm	−6 dB	20 dB	_____	_____	_____	_____
18590.004	0 dBm	0 dB	20 dB	_____	_____	_____	_____
18590.004	0 dBm	−10 dB	10 dB	_____	_____	_____	_____

19. Scan the entire band from 12.3 GHz to 18.6 GHz. Ensure that rise time, fall time, overshoot, and ringing are within the specified limits at power levels of −10 dBm, 0 dBm, and maximum power for all frequencies within this range. Record the worst case results.

FREQUENCY (GHz)	OUTPUT LEVEL RANGE	VERNIER	Variable Attenuator	Rise (ns)	Fall (ns)	Overshoot and Ringing (%)
_____	_____	_____	_____	_____	_____	_____
_____	_____	_____	_____	_____	_____	_____

20. Set the SWEEP FREQ START to 18600.004 MHz on the Signal Generator Set the sweep stop frequency to 2600.0000 MHz.

21. Set the sweep start frequency to 18530.000 MHz on the Local Oscillator and the sweep stop frequency to 25930.000 MHz.

PERFORMANCE TESTS

22. Tune the Signal Generator to each frequency shown in the table below. Set the Output Level, Level Vernier, and Variable step Attenuator to the values shown at each frequency. Measure rise time, fall time , overshoot and ringing at each setting and compare to the specified limits.

FREQUENCY (GHz)	OUTPUT LEVEL RANGE	VERNIER	Variable Attenuator	Rise (ns)	Fall (ns)	Overshoot and Ringing (%)	
18600.004	+10 dBm	−6 dB	10 dB	_____	_____	_____	_____
18600.004	0 dBm	0 dB	10 dB	_____	_____	_____	_____
18600.004	0 dBm	−10 dB	0 dB	_____	_____	_____	_____
21990.004	+10 dBm	−6 dB	10 dB	_____	_____	_____	_____
21990.004	0 dBm	0 dB	10 dB	_____	_____	_____	_____
21990.004	0 dBm	−10 dB	0 dB	_____	_____	_____	_____
22000.004	0 dBm	0 dB	10 dB	_____	_____	_____	_____
22000.004	0 dBm	−10 dB	0 dB	_____	_____	_____	_____
25990.004	0 dBm	0 dB	10 dB	_____	_____	_____	_____
25990.004	0 dBm	−10 dB	0 dB	_____	_____	_____	_____

23. Scan the entire band from 18.6 GHz to 26.0 GHz. Ensure that rise time, fall time, overshoot, and ringing are within the specified limits at power levels of −10 dBm, 0 dBm, and maximum power for all frequencies within this range. Record the worst case results.

FREQUENCY (GHz)	OUTPUT LEVEL RANGE	VERNIER	Variable Attenuator	Rise (ns)	Fall (ns)	Overshoot and Ringing (%)
_____	_____	_____	_____	_____	_____	_____
_____	_____	_____	_____	_____	_____	_____

PROCEDURE: Peak Level Accuracy Tests

1. Connect the equipment as shown in Figure 4-12. Set Signal Generator to 6.6 GHz at +8 dBm output level. Set the variable step attenuator to 20 dB.

2. Set the pulse generator to 100 ns pulse width at 1 MHz pulse rate.

PERFORMANCE TESTS

3. Set Signal Generator to PULSE NORM. Adjust the oscilloscope vertical position and sensitivity controls so that the pulse base line is one division from the bottom graticule line and approximately 5 divisions high in peak amplitude.

4. Switch Signal Generator to CW mode.

5. Adjust the oscilloscope vertical sensitivity for a display 5 divisions above the pulse base line. The peak of the CW signal is now the CW peak reference level.

NOTE:
Do not touch the vertical position controls after the reference pulse base line has been set.

6. Switch back to PULSE NORM. Without touching the vertical sensitivity controls, measure the difference between the CW peak reference level and the average peak pulse level excluding any over/undershoot. See Figure 4-14.

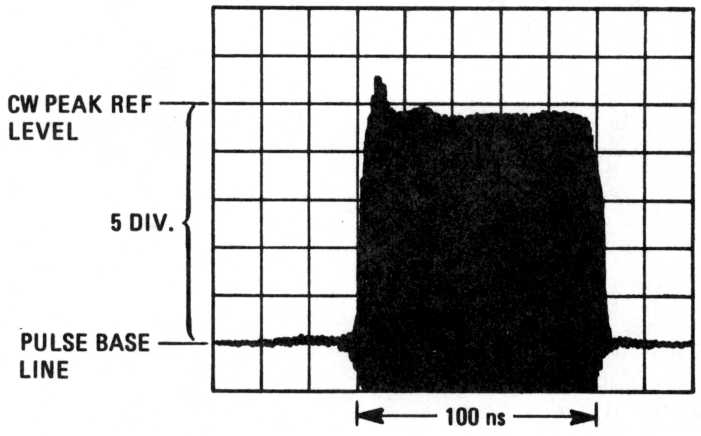

Figure 4-14. Pulse Accuracy Measurement

7. The error can be read in percent. Using a 5 division peak reference, each division represents 20% of error. Measured error must be < +12.2/-8.9% (+0.61/-0.45 division). This is equal to +/- 1 dB.

PERFORMANCE TESTS

Signal Generator FREQ	LEVEL	% ERROR
6.6 GHz	+8 dBm	_____

8. Repeat steps 1 through 7 for the following frequencies and output levels, keeping a 70 MHz IF between the Signal Generator and local oscillator.

Signal Generator FREQ	LEVEL	% ERROR
6.61 GHz	+8 dBm	_____
	0 dBm	_____
	-10dBm	_____
12.3 GHz	+8 dBm	_____
	0 dBm	_____
	-10dBm	_____
12.31 GHz	+8 dBm	_____
	0 dBm	_____
	-10dBm	_____
18.6 GHz	+4 dBm	_____
	-10dBm	_____
22.1 GHz	0 dBm	_____
	-10dBm	_____

PROCEDURE: On/Off Ratio Tests

1. Connect the equipment as shown in Figure 4-15.

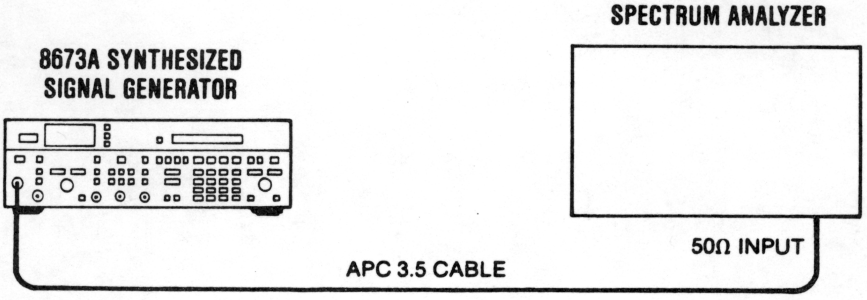

Figure 4-15. On/Off Ratio Tests

PERFORMANCE TESTS

2. Set the Signal Generator controls as follows.

FREQUENCY	2.0 GHz
OUTPUT LEVEL RANGE	0 dBm
OUTPUT LEVEL VERNIER	-10 DB
PULSE	COMPL
AM	OFF
FM DEVIATION	OFF
SWEEP MODE	OFF

3. Adjust the spectrum analyzer to establish a reference signal at the top graticule line. Use at least 40 dB of input attenuation and a bandwidth of 1KHz or less.

4. Set PULSE MODE to NORM.

5. Reduce the spectrum analyzer reference level as needed to observe the residual signal. It should be >80 dB below the reference established in step 3.

Frequency GHz	Level (dB below reference signal)	
2.0	80	_____

6. Repeat steps 2 through 5 for Signal Generator frequencies listed below. Record the results.

Frequency GHz	Level (dB below reference signal)	
3.0	80	_____
4.0	80	_____
5.0	80	_____
6.0	80	_____
6.6	80	_____

PERFORMANCE TESTS

4-19. INTERNAL TIME BASE AGING RATE

SPECIFICATION: Less than 5×10^{-10} per day after 30 day warmup. For instruments disconnected from Mains power less than 24 hours, the aging rate is $<5 \times 10^{-10}$ per day after a 24 hour warmup.

DESCRIPTION: A reference signal from the Signal Generator (10 MHz OUT) is connected to the oscilloscope's vertical input. A frequency standard (with long term stability greater than 1×10^{-10}) is connected to the trigger input. The time required for a specific phase change is measured immediately and after a period of time. The aging rate is inversely proportional to the absolute value of the difference in the measured times.

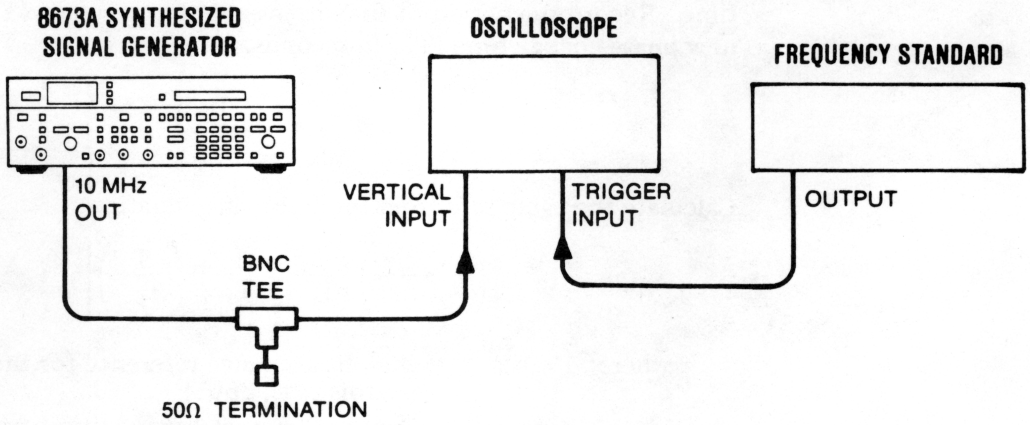

Figure 4-16. Internal Time Base Aging Rate Test Setup

EQUIPMENT:

Frequency Standard	HP 5065A
Oscilloscope	HP 1715A
50Ω Termination	HP 11593A

NOTE

Be sure the Synthesizer has had 30 days to warm up before beginning this test. If the Synthesizer was disconnected from the power line for less than 24 hours, only a 24 hour warm-up is needed.

PROCEDURE:

1. Set the rear panel FREQ REFERENCE INT-EXT switch to the INT position.

PERFORMANCE TESTS

4-19. INTERNAL TIME BASE AGING RATE (Cont'd)

2. Connect the equipment as shown in Figure 4-17.

3. Adjust the oscilloscope controls for a stable display of the 10 MHz Signal Generator output.

4. Measure the time required for a phase change of 360°. Record the time (T_1) in seconds.

T_1 = _____ s

5. Wait for a period of time (from 3 to 24 hours) and re-measure the phase change time. Record the period of time between measurements (T_2) in hours and the new phase change time (T_3) in seconds.

T_2 = _____ h

T_3 = _____ s

6. Calculate the aging rate from the following equation:

$$\text{Aging Rate} = \left| \left(\frac{1 \text{ cycle}}{f} \right) \left(\frac{1}{T_1} - \frac{1}{T_3} \right) \left(\frac{T}{T_2} \right) \right|$$

where: 1 cycle = the phase change reference for the time measurement (in this case, 360°)
f = Synthesizer's reference output frequency (10 MHz)
T = specified time for aging rate (24h)
T_1 = initial time measurement (s) for a 360° (1 cycle) change
T_2 = time between measurements (h)
T_3 = final time measurement (s) for a 360° (1 cycle) change

for example:

if T_1 = 351s
T_2 = 3h
T_3 = 349s

then:

$$\text{Aging Rate} = \left| \left(\frac{1 \text{ cycle}}{10 \text{ MHz}} \right) \left(\frac{1}{351\text{s}} - \frac{1}{349\text{s}} \right) \left(\frac{24\text{h}}{3\text{h}} \right) \right|$$

$$= 1.306 \times 10^{-11}$$

7. Verify that the aging rate is less than 5×10^{-10}.

NOTE

If the absolute frequencies of the frequency standard and the Synthesizer's reference oscillator are extremely close, the measurement time in steps 5 and 6 (T_1 and T_3) can be reduced by measuring the time required for a phase change of something less than 360°. Change 1 cycle in the formula (i.e., 180° = 1/2 cycle, 90° = 1/4 cycle).

Table 4-2. Performance Test Record (1 of 3)

Level Accuracy

Level	Frequency	Minimum	Actual	Maximum
+8 dBm	2 GHz	+6.00 dBm	_____	+10.00 dBm
(+10 dBm Range)	4 GHz	+6.00 dBm	_____	+10.00 dBm
	6 GHz	+6.00 dBm	_____	+10.00 dBm
	8 GHz	+5.75 dBm	_____	+10.25 dBm
	10 GHz	+5.75 dBm	_____	+10.25 dBm
	12 GHz	+5.75 dBm	_____	+10.25 dBm
	14 GHz	+5.50 dBm	_____	+10.50 dBm
	16 GHz	+5.50 dBm	_____	+10.50 dBm
	18 GHz	+5.50 dBm	_____	+10.50 dBm
+3 dBm	2 GHz	+1.25 dBm	_____	+4.75 dBm
(0 dBm Range)	4 GHz	+1.25 dBm	_____	+4.75 dBm
	6 GHz	+1.25 dBm	_____	+4.75 dBm
	8 GHz	+1.00 dBm	_____	+5.00 dBm
	10 GHz	+1.00 dBm	_____	+5.00 dBm
	12 GHz	+1.00 dBm	_____	+5.00 dBm
	14 GHz	+0.75 dBm	_____	+5.25 dBm
	16 GHz	+0.75 dBm	_____	+5.25 dBm
	18 GHz	+0.75 dBm	_____	+5.25 dBm
	20 GHz	+0.25 dBm	_____	+5.75 dBm
	22 GHz	+0.25 dBm	_____	+5.75 dBm
0 dBm	2 GHz	-1.75 dBm	_____	+1.75 dBm
(0 dBm Range)	4 GHz	-1.75 dBm	_____	+1.75 dBm
	6 GHz	-1.75 dBm	_____	+1.75 dBm
	8 GHz	-2.00 dBm	_____	+2.00 dBm
	10 GHz	-2.00 dBm	_____	+2.00 dBm
	12 GHz	-2.00 dBm	_____	+2.00 dBm
	14 GHz	-2.25 dBm	_____	+2.25 dBm
	16 GHz	-2.25 dBm	_____	+2.25 dBm
	18 GHz	-2.25 dBm	_____	+2.25 dBm
	20 GHz	-2.75 dBm	_____	+2.75 dBm
	25 GHz	-2.75 dBm	_____	+2.75 dBm
	24 GHz	-2.75 dBm	_____	+2.75 dBm
	26 GHz	-2.75 dBm	_____	+2.75 dBm
-5 dBm	2 GHz	-6.75 dBm	_____	-3.25 dBm
(0 dBm Range)	4 GHz	-6.75 dBm	_____	-3.25 dBm
	6 GHz	-6.75 dBm	_____	-3.25 dBm
	8 GHz	-7.00 dBm	_____	-3.00 dBm
	10 GHz	-7.00 dBm	_____	-3.00 dBm
	12 GHz	-7.00 dBm	_____	-3.00 dBm
	14 GHz	-7.25 dBm	_____	-2.75 dBm
	16 GHz	-7.25 dBm	_____	-2.75 dBm
	18 GHz	-7.25 dBm	_____	-2.75 dBm
	20 GHz	-7.75 dBm	_____	-2.25 dBm
	25 GHz	-7.75 dBm	_____	-2.25 dBm
	24 GHz	-7.75 dBm	_____	-2.25 dBm
	26 GHz	-7.75 dBm	_____	-2.25 dBm

Table 4-2. Performance Test Record (2 of 3)

Level Accuracy (Continued)				
Level	Frequency	Minimum	Actual	Maximum
-10 dBm (0 dBm Range)	2 GHz	-11.75 dBm	_____	-8.25 dBm
	4 GHz	-11.75 dBm	_____	-8.25 dBm
	6 GHz	-11.75 dBm	_____	-8.25 dBm
	8 GHz	-12.00 dBm	_____	-8.00 dBm
	10 GHz	-12.00 dBm	_____	-8.00 dBm
	12 GHz	-12.00 dBm	_____	-8.00 dBm
	14 GHz	-12.25 dBm	_____	-7.75 dBm
	16 GHz	-12.25 dBm	_____	-7.75 dBm
	18 GHz	-12.25 dBm	_____	-7.75 dBm
	20 GHz	-12.75 dBm	_____	-7.25 dBm
	22 GHz	-12.75 dBm	_____	-7.25 dBm
	24 GHz	-12.75 dBm	_____	-7.25 dBm
	26 GHz	-12.75 dBm	_____	-7.25 dBm
-10 dBm (-10 dBm Range)	2 GHz	-12.25 dBm	_____	-7.75 dBm
	4 GHz	-12.25 dBm	_____	-7.75 dBm
	6 GHz	-12.25 dBm	_____	-7.75 dBm
	8 GHz	-12.50 dBm	_____	-7.50 dBm
	10 GHz	-12.50 dBm	_____	-7.50 dBm
	12 GHz	-12.50 dBm	_____	-7.50 dBm
	14 GHz	-12.85 dBm	_____	-7.15 dBm
	16 GHz	-12.85 dBm	_____	-7.15 dBm
	18 GHz	-12.85 dBm	_____	-7.15 dBm
	20 GHz	-13.30 dBm	_____	-7.70 dBm
	22 GHz	-13.30 dBm	_____	-7.70 dBm
	24 GHz	-13.30 dBm	_____	-7.70 dBm
	26 GHz	-13.30 dBm	_____	-7.70 dBm
-20 dBm (-20 dBm Range)	2 GHz	-22.45 dBm	_____	-17.55 dBm
	4 GHz	-22.45 dBm	_____	-17.55 dBm
	6 GHz	-22.45 dBm	_____	-17.55 dBm
	8 GHz	-22.70 dBm	_____	-17.30 dBm
	10 GHz	-22.70 dBm	_____	-17.30 dBm
	12 GHz	-22.70 dBm	_____	-17.30 dBm
	14 GHz	-23.05 dBm	_____	-16.95 dBm
	16 GHz	-23.05 dBm	_____	-16.95 dBm
	18 GHz	-23.05 dBm	_____	-16.95 dBm
	20 GHz	-23.60 dBm	_____	-16.40 dBm
	22 GHz	-23.60 dBm	_____	-16.40 dBm
	24 GHz	-23.60 dBm	_____	-16.40 dBm
	26 GHz	-23.60 dBm	_____	-16.40 dBm

Table 4-2. Performance Test Record (3 of 3)

Low Level Accuracy			
Output Level Range	Minimum	Actual	Maximum
2.2 GHz to 6.6 GHz			
-30 dBm	-32.75 dBm	_____	-27.25 dBm
-40 dBm	-42.85 dBm	_____	-37.15 dBm
-50 dBm	-52.95 dBm	_____	-47.05 dBm
-60 dBm	-63.05 dBm	_____	-56.95 dBm
-70 dBm	-73.15 dBm	_____	-66.85 dBm
-80 dBm	-83.25 dBm	_____	-76.75 dBm
-90 dBm	-93.35 dBm	_____	-86.65 dBm
6.6 GHz to 12.3 GHz			
-30 dBm	-33.00 dBm	_____	-27.00 dBm
-40 dBm	-43.10 dBm	_____	-36.90 dBm
-50 dBm	-53.20 dBm	_____	-46.80 dBm
-60 dBm	-63.30 dBm	_____	-56.70 dBm
-70 dBm	-73.40 dBm	_____	-66.60 dBm
-80 dBm	-83.50 dBm	_____	-76.50 dBm
-90 dBm	-93.60 dBm	_____	-86.40 dBm
12.3 GHz to 18.6 GHz			
-30 dBm	-33.45 dBm	_____	-26.55 dBm
-40 dBm	-43.65 dBm	_____	-36.35 dBm
-50 dBm	-53.85 dBm	_____	-46.15 dBm
-60 dBm	-64.05 dBm	_____	-55.95 dBm
-70 dBm	-74.25 dBm	_____	-65.75 dBm
-80 dBm	-84.45 dBm	_____	-75.55 dBm
-90 dBm	-94.65 dBm	_____	-85.35 dBm
18.6 GHz to 26.0 GHz			
-30 dBm	-34.05 dBm	_____	-25.95 dBm
-40 dBm	-44.25 dBm	_____	-35.75 dBm
-50 dBm	-54.45 dBm	_____	-45.55 dBm
-60 dBm	-64.65 dBm	_____	-55.35 dBm
-70 dBm	-74.85 dBm	_____	-65.15 dBm
-80 dBm	-85.05 dBm	_____	-74.95 dBm
-90 dBm	-95.25 dBm	_____	-84.75 dBm

SECTION V
ADJUSTMENTS

INTRODUCTION

This section normally contains adjustment procedures and cautions relating to repair and calibration of the instrument.

This section is not available and will be added later.

SECTION VI
REPLACEABLE PARTS

6-1. INTRODUCTION

This section contains information for ordering parts. Table 6-1 lists exchange assemblies. Table 6-2 lists abbreviations used in the parts list and the manual. Table 6-3 lists all replaceable parts in reference designator order. Table 6-4 contains the names and addresses that correspond to the manufacturer's code numbers.

6-2. EXCHANGE ASSEMBLIES

Table 6-1 lists assemblies within the instrument that may be replaced on an exchange basis. Exchange, factory-repaired and tested assemblies are available only on a trade-in basis. Defective assemblies must be returned for credit. Assemblies required for spare parts stock must be ordered by the new assembly part number.

6-3. ABBREVIATIONS

Table 6-2 lists abbreviations used in the parts list, schematics, and throughout the manual. In some cases, two forms of the abbreviation are used, one all in capitals letters, and one partial or no capitals. This occurs because the abbreviations in the parts list are always all capitals. However, in the schematics and other parts of the manual, other abbreviation forms are used with both lower case and upper case letters.

6-4. REPLACEABLE PARTS LIST

Table 6-2 is the list of replaceable parts and is organized as follows:

a. Electrical assemblies and their components in alpha-numerical order by reference designation.

b. Chassis-mounted parts in alpha-numerical order by reference designation.

c. Mechanical parts.

Information given for each part consists of the following:

a. The Hewlett-Packard part number.

b. Part number check digit (CD).

c. The total quantity (Qty) for the entire instrument except for option assemblies.

d. The description of the part.

e. A typical manufacturer of the part in a five-digit code.

f. The manufacturer's number for the part.

The total quantity for each part is given only once — at the first appearance of the part number in the list for each major assembly.

NOTE

Total quantities for optional assemblies are totaled by assembly and not integrated into the standard list.

6-5. ORDERING INFORMATION

To order a part listed in the replaceable parts table, quote the Hewlett-Packard part number (with the check digit), indicate the quantity required, and address the order to the nearest Hewlett-Packard office. The check digit will ensure accurate and timely processing of your order.

To order a part that is not listed in the replaceable parts table, include the instrument model number, instrument serial number, description and function of the part, and the number of parts required. Address the order to the nearest Hewlett-Packard office.

6-6. SPARE PARTS KIT

Stocking spare parts for an instrument is often done to ensure quick return to service after a malfunction occurs. Hewlett-Packard has a "Spare Parts Kit" available for this purpose. The kit consists of selected replaceable assemblies and components for this instrument. The contents of the kit and the "Recommended Spares" list are based on failure reports and repair data, and provides parts support for one year. A complimentary "Recommended Spares" list for this instrument may be obtained on request and the "Spare Parts Kit" may be ordered through the nearest Hewlett-Packard office.

Table 6-1. Part Numbers for Eachange Assemblies

Reference Designation	Description	Part Number*	
		Exchange Assy	New Assy
A1A9	Pre Amp Assembly	08673-67201	08673-67001
A1A10	YTM Assembly	08673-67203	08673-67003
A1A11	Power Amp	08673-67204	08673-67004
A1AT1	Programmable Attenuator Assembly	08673-60096	08673-60043
A3A1A4	M/N VCO Assembly	86701-60071	86701-60065
A3A9A3	YTO	5086-6366	5086-7366

*When ordering extra assemblies for spare parts stock, use new assembly part number only. Exchange orders require return of the defective part.

Table 6-2. Reference Designations and Abbreviations (1 of 2)

REFERENCE DESIGNATIONS

A . . . . . assembly
AT . . attenuator; isolator; termination
B . . . . . fan; motor
BT . . . . . battery
C . . . . . capacitor
CP . . . . . coupler
CR . . . . . diode; diode thyristor; varactor
DC . . . directional coupler
DL . . . . . delay line
DS . . . . . annunciator; signaling device (audible or visual); lamp; LED
E . . . . . miscellaneous electrical part
F . . . . . fuse
FL . . . . . filter
H . . . . . hardware
HY . . . . . circulator
J . . . electrical connector (stationary portion); jack
K . . . . . relay
L . . . . . coil; inductor
M . . . . . meter
MP . . . . . miscellaneous mechanical part
P . . . electrical connector (movable portion); plug
Q . . . . . transistor: SCR; triode thyristor
R . . . . . resistor
RT . . . . . thermistor
S . . . . . switch
T . . . . . transformer
TB . . . . . terminal board
TC . . . . . thermocouple
TP . . . . . test point
U . . . . . integrated circuit; microcircuit
V . . . . . electron tube
VR . . . . voltage regulator; breakdown diode
W . . . . cable; transmission path; wire
X . . . . . socket
Y . . . . crystal unit (piezo-electric or quartz)
Z . . . . tuned cavity; tuned circuit

ABBREVIATIONS

A . . . . . ampere
ac . . . . alternating current
ACCESS . . . . . accessory
ADJ . . . . . adjustment
A/D . . . . analog-to-digital
AF . . . . . audio frequency
AFC . . . . . automatic frequency control
AGC . . . . . automatic gain control
AL . . . . . aluminum
ALC . . . . . automatic level control
AM . . . amplitude modulation
AMPL . . . . . amplifier
APC . . . . automatic phase control
ASSY . . . . . assembly
AUX . . . . . auxiliary
avg . . . . . average
AWG . . . . American wire gauge
BAL . . . . . balance
BCD . . . . . binary coded decimal
BD . . . . . board
BE CU . . . . . beryllium copper
BFO . . . . . beat frequency oscillator
BH . . . . . binder head
BKDN . . . . . breakdown
BP . . . . . bandpass
BPF . . . . . bandpass filter
BRS . . . . . brass
BWO . . . . . backward-wave oscillator
CAL . . . . . calibrate
ccw . . counter-clockwise
CER . . . . . ceramic
CHAN . . . . . channel
cm . . . . . centimeter
CMO . . cabinet mount only
COAX . . . . . coaxial
COEF . . . . . coefficient
COM . . . . . common
COMP . . . . . composition
COMPL . . . . . complete
CONN . . . . . connector
CP . . . . . cadmium plate
CRT . . . cathode-ray tube
CTL . . . . complementary transistor logic
CW . . . . . continuous wave
cw . . . . . clockwise
cm . . . . . centimeter
D/A . . . . digital-to-analog
dB . . . . . decibel
dBm . . . . decibel referred to 1 mW
dc . . . . . direct current
deg . . degree (temperature interval or difference)
° . . . . . degree (plane angle)
°C . . . . . degree Celsius (centigrade)
°F . . . . degree Fahrenheit
°K . . . . . degree Kelvin
DEPC . . deposited carbon
DET . . . . . detector
diam . . . . . diameter
DIA . . . diameter (used in parts list)
DIFF AMPL . . differential amplifier
div . . . . . division
DPDT . . . . . double-pole, double-throw
DR . . . . . drive
DSB . . . . double sideband
DTL . . . . diode transistor logic
DVM . . . digital voltmeter
ECL . . . . emitter coupled logic
EMF . . electromotive force
EDP . . . . . electronic data processing
ELECT . . . . . electrolytic
ENCAP . . . . encapsulated
EXT . . . . . external
F . . . . . farad
FET . . . . . field-effect transistor
F/F . . . . . flip-flop
FH . . . . . flat head
FIL H . . . . . fillister head
FM . . frequency modulation
FP . . . . . front panel
FREQ . . . . . frequency
FXD . . . . . fixed
g . . . . . gram
GE . . . . . germanium
GHz . . . . . gigahertz
GL . . . . . glass
GRD . . . . . ground(ed)
H . . . . . henry
h . . . . . hour
HET . . . . . heterodyne
HEX . . . . . hexagonal
HD . . . . . head
HDW . . . . . hardware
HF . . . . . high frequency
HG . . . . . mercury
HI . . . . . high
HP . . . . . Hewlett-Packard
HPF . . . . . high pass filter
HR . . . . . hour (used in parts list)
HV . . . . . high voltage
Hz . . . . . Hertz
IC . . . . integrated circuit
ID . . . . . inside diameter
IF . . . . . intermediate frequency
IMPG . . . . . impregnated
in . . . . . inch
INCD . . . . . incandescent
INCL . . . . . include(s)
INP . . . . . input
INS . . . . . insulation
INT . . . . . internal
kg . . . . . kilogram
kHz . . . . . kilohertz
kΩ . . . . . kilohm
kV . . . . . kilovolt
lb . . . . . pound
LC . . . . . inductance-capacitance
LED . . light-emitting diode
LF . . . . . low frequency
LG . . . . . long
LH . . . . . left hand
LIM . . . . . limit
LIN . . . linear taper (used in parts list)
lin . . . . . linear
LK WASH . . . lock washer
LO . . . low; local oscillator
LOG . . . . logarithmic taper (used in parts list)
log . . . . . logrithm(ic)
LPF . . . . . low pass filter
LV . . . . . low voltage
m . . . . . meter (distance)
mA . . . . . milliampere
MAX . . . . . maximum
MΩ . . . . . megohm
MEG . . . . meg (10^6) (used in parts list)
MET FLM . . . . metal film
MET OX . . metallic oxide
MF . . . medium frequency; microfarad (used in parts list)
MFR . . . . . manufacturer
mg . . . . . milligram
MHz . . . . . megahertz
mH . . . . . millihenry
mho . . . . . mho
MIN . . . . . minimum
min . . . . . minute (time)
. . .' . . . . . minute (plane angle)
MINAT . . . . . miniature
mm . . . . . millimeter

NOTE

All abbreviations in the parts list will be in upper-case.

Table 6-2. Reference Designations and Abbreviations (2 of 2)

MOD . . . . . modulator
MOM . . . . . momentary
MOS . . . . . metal-oxide semiconductor
ms . . . . . millisecond
MTG . . . . . mounting
MTR . . . meter (indicating device)
mV . . . . . millivolt
mVac . . . . . millivolt, ac
mVdc . . . . . millivolt, dc
mVpk . . . . millivolt, peak
mVp-p . . . millivolt, peak-to-peak
mVrms . . . . millivolt, rms
mW . . . . . milliwatt
MUX . . . . . multiplex
MY . . . . . mylar
μA . . . . . microampere
μF . . . . . microfarad
μH . . . . . microhenry
μmho . . . . . micromho
μs . . . . . microsecond
μV . . . . . microvolt
μVac . . . . . microvolt, ac
μVdc . . . . . microvolt, dc
μVpk . . . microvolt, peak
μVp-p . . . microvolt, peak-to-peak
μVrms . . . . microvolt, rms
μW . . . . . microwatt
nA . . . . . nanoampere
NC . . . . . no connection
N/C . . . . normally closed
NE . . . . . neon
NEG . . . . . negative
nF . . . . . nanofarad
NI PL . . . . . nickel plate
N/O . . . . . normally open
NOM . . . . . nominal
NORM . . . . . normal
NPN . . . negative-positive-negative
NPO . . . . negative-positive zero (zero temperature coefficient)
NRFR . . not recommended for field replacement
NSR . . . . . not separately replaceable
ns . . . . . nanosecond
nW . . . . . nanowatt
OBD . . . order by description
OD . . . . . outside diameter
OH . . . . . oval head
OP AMPL . . . operational amplifier
OPT . . . . . option
OSC . . . . . oscillator
OX . . . . . oxide
oz . . . . . ounce
Ω . . . . . ohm
P . . . . peak (used in parts list)
PAM . . . . pulse-amplitude modulation
PC . . . . . printed circuit
PCM . . pulse-code modulation; pulse-count modulation
PDM . . . . . pulse-duration modulation
pF . . . . . picofarad
PH BRZ phosphor bronze
PHL . . . . . Phillips
PIN . . . positive-intrinsic-negative
PIV . . . . . peak inverse voltage
pk . . . . . peak
PL . . . . . phase lock
PLO . . . . . phase lock oscillator
PM . . . . phase modulation
PNP . . . positive-negative-positive
P/O . . . . . part of
POLY . . . . . polystyrene
PORC . . . . . porcelain
POS . . positive; position(s) (used in parts list)
POSN . . . . . position
POT . . . . . potentiometer
p-p . . . . . peak-to-peak
PP . . . peak-to-peak (used in parts list)
PPM . . . . . pulse-position modulation
PREAMPL . . . preamplifier
PRF . . . . pulse-repetition frequency
PRR . . . . pulse repetition rate
ps . . . . . picosecond
PT . . . . . point
PTM . . . . . pulse-time modulation
PWM . . . . . pulse-width modulation
PWV . . . . . peak working voltage
RC . . . . . resistance-capacitance
RECT . . . . . rectifier
REF . . . . . reference
REG . . . . . regulated
REPL . . . . . replaceable
RF . . . . . radio frequency
RFI . . . . radio frequency interference
RH . . . . round head; right hand
RLC . . . . . resistance-inductance-capacitance
RMO . . . rack mount only
rms . . . . root-mean-square
RND . . . . . round
ROM . . read-only memory
R&P . . . . . rack and panel
RWV . . . reverse working voltage
S . . . scattering parameter
s . . . . . second (time)
. . . " . second (plane angle)
S-B . . . . . slow-blow (fuse) (used in parts list)
SCR . . . silicon controlled rectifier; screw
SE . . . . . selenium
SECT . . . . . sections
SEMICON . . . . . semiconductor
SHF . . . . . superhigh frequency
SI . . . . . silicon
SIL . . . . . silver
SL . . . . . slide
SNR . . signal-to-noise ratio
SPDT . . . . . single-pole, double-throw
SPG . . . . . spring
SR . . . . . split ring
SPST . . . . . single-pole, single-throw
SSB . . . . . single sideband
SST . . . . . stainless steel
STL . . . . . steel
SQ . . . . . square
SWR . . standing-wave ratio
SYNC . . . . . synchronize
T . . timed (slow-blow fuse)
TA . . . . . tantalum
TC . . . . . temperature compensating
TD . . . . . time delay
TERM . . . . . terminal
TFT . . thin-film transistor
TGL . . . . . toggle
THD . . . . . thread
THRU . . . . . through
TI . . . . . titanium
TOL . . . . . tolerance
TRIM . . . . . trimmer
TSTR . . . . . transistor
TTL . . transistor-transistor logic
TV . . . . . television
TVI television interference
TWT . . traveling wave tube
U . . . . . micro (10^{-6}) (used in parts list)
UF . . . microfarad (used in parts list)
UHF . . ultrahigh frequency
UNREG . . . . unregulated
V . . . . . volt
VA . . . . . voltampere
Vac . . . . . volts, ac
VAR . . . . . variable
VCO . . . voltage-controlled oscillator
Vdc . . . . . volts, dc
VDCW . . volts, dc, working (used in parts list)
V(F) . . . . . volts, filtered
VFO . . variable-frequency oscillator
VHF . . . . . very-high frequency
Vpk . . . . . volts, peak
Vp-p . . volts, peak-to-peak
Vrms . . . . . volts, rms
VSWR . . . voltage standing wave ratio
VTO . . . . . voltage-tuned oscillator
VTVM . . . . vacuum-tube voltmeter
V(X) . . . . . volts, switched
W . . . . . watt
W/ . . . . . with
WIV . . . . working inverse voltage
WW . . . . . wirewound
W/O . . . . . without
YIG . . yttrium-iron-garnet
Z_o . . . . . characteristic impedance

NOTE

All abbreviations in the parts list will be in upper-case.

MULTIPLIERS

Abbreviation	Prefix	Multiple
T	tera	10^{12}
G	giga	10^{9}
M	mega	10^{6}
k	kilo	10^{3}
da	deka	10
d	deci	10^{-1}
c	centi	10^{-2}
m	milli	10^{-3}
μ	micro	10^{-6}
n	nano	10^{-9}
p	pico	10^{-12}
f	femto	10^{-15}
a	atto	10^{-18}

Table 6-3. Replaceable Parts

Reference Designation	HP Part Number	C D	Qty	Description	Mfr Code	Mfr Part Number
A1				RF OUTPUT ASSEMBLY		
A1A1	08673-60078	3		ATTENUATOR DRIVER BOARD ASSEMBLY	28480	08673-60078
A1A1C1	0180-0291	3	18	CAPACITOR-FXD 1UF+-10% 35VDC TA	56289	150D105X9035A2
A1A1C2	0180-0197	8	15	CAPACITOR-FXD 2.2UF+-10% 20VDC TA	56289	150D225X9020A2
A1A1C3	0160-0572	1	2	CAPACITOR-FXD 2200PF +-20% 100VDC CER	28480	0160-0572
A1A1C4	0160-0572	1		CAPACITOR-FXD 2200PF +-20% 100VDC CER	28480	0160-0572
A1A1C5	0160-0576	5	49	CAPACITOR-FXD .1UF +-20% 50VDC CER	28480	0160-0576
A1A1C6	0160-0576	5		CAPACITOR-FXD .1UF +-20% 50VDC CER	28480	0160-0576
A1A1CR1	1901-0050	3	46	DIODE-SWITCHING 80V 200MA 2NS DO-35	28480	1901-0050
A1A1CR2	1901-0050	3		DIODE-SWITCHING 80V 200MA 2NS DO-35	28480	1901-0050
A1A1CR3	1901-0050	3		DIODE-SWITCHING 80V 200MA 2NS DO-35	28480	1901-0050
A1A1CR4	1901-0050	3		DIODE-SWITCHING 80V 200MA 2NS DO-35	28480	1901-0050
A1A1CR5	1901-0050	3		DIODE-SWITCHING 80V 200MA 2NS DO-35	28480	1901-0050
A1A1CR6	1901-0050	3		DIODE-SWITCHING 80V 200MA 2NS DO-35	28480	1901-0050
A1A1CR7	1901-0050	3		DIODE-SWITCHING 80V 200MA 2NS DO-35	28480	1901-0050
A1A1CR8	1901-0050	3		DIODE-SWITCHING 80V 200MA 2NS DO-35	28480	1901-0050
A1A1CR9	1901-0050	3		DIODE-SWITCHING 80V 200MA 2NS DO-35	28480	1901-0050
A1A1CR10	1901-0050	3		DIODE-SWITCHING 80V 200MA 2NS DO-35	28480	1901-0050
A1A1CR11	1901-0050	3		DIODE-SWITCHING 80V 200MA 2NS DO-35	28480	1901-0050
A1A1CR12	1901-0050	3		DIODE-SWITCHING 80V 200MA 2NS DO-35	28480	1901-0050
A1A1CR13	1901-0050	3		DIODE-SWITCHING 80V 200MA 2NS DO-35	28480	1901-0050
A1A1CR14	1901-0050	3		DIODE-SWITCHING 80V 200MA 2NS DO-35	28480	1901-0050
A1A1CR15	1901-0050	3		DIODE-SWITCHING 80V 200MA 2NS DO-35	28480	1901-0050
A1A1CR16	1901-0050	3		DIODE-SWITCHING 80V 200MA 2NS DO-35	28480	1901-0050
A1A1CR17	1901-0050	3		DIODE-SWITCHING 80V 200MA 2NS DO-35	28480	1901-0050
A1A1CR18	1901-0050	3		DIODE-SWITCHING 80V 200MA 2NS DO-35	28480	1901-0050
A1A1CR19	1901-0050	3		DIODE-SWITCHING 80V 200MA 2NS DO-35	28480	1901-0050
A1A1CR20	1901-0050	3		DIODE-SWITCHING 80V 200MA 2NS DO-35	28480	1901-0050
A1A1CR21	1901-0050	3		DIODE-SWITCHING 80V 200MA 2NS DO-35	28480	1901-0050
A1A1CR22	1901-0050	3		DIODE-SWITCHING 80V 200MA 2NS DO-35	28480	1901-0050
A1A1Q1	1854-0810	2	31	TRANSISTOR NPN SI PD=625MW FT=200MHZ	28480	1854-0810
A1A1Q2	1854-0810	2		TRANSISTOR NPN SI PD=625MW FT=200MHZ	28480	1854-0810
A1A1R1	0698-3430	5	4	RESISTOR 21.5 1% .125W F TC=0+-100	03888	PME55-1/8-T0-21R5-F
A1A1R2	0698-3430	5		RESISTOR 21.5 1% .125W F TC=0+-100	03888	PME55-1/8-T0-21R5-F
A1A1R3	0698-0083	8	33	RESISTOR 1.96K 1% .125W F TC=0+-100	24546	C4-1/8-T0-1961-F
A1A1R4	0698-0083	8		RESISTOR 1.96K 1% .125W F TC=0+-100	24546	C4-1/8-T0-1961-F
A1A1R5	0757-0289	2	5	RESISTOR 13.3K 1% .125W F TC=0+-100	19701	MF4C1/8-T0-1332-F
A1A1R6	0757-0288	1	4	RESISTOR 9.09K 1% .125W F TC=0+-100	19701	MF4C1/8-T0-9091-F
A1A1U1	1820-0535	7	5	IC DRVR TTL AND DUAL 2-INP	01295	SN75451BP
A1A1U2	1820-0535	7		IC DRVR TTL AND DUAL 2-INP	01295	SN75451BP
A1A1U3	1820-1445	0	10	IC LCH TTL LS 4-BIT	01295	SN74LS375N
A1A1U4	1820-0535	7		IC DRVR TTL AND DUAL 2-INP	01295	SN75451BP
A1A1U5	1820-0535	7		IC DRVR TTL AND DUAL 2-INP	01295	SN75451BP
A1A1U6	1820-1445	0		IC LCH TTL LS 4-BIT	01295	SN74LS375N
A1A1U7	1820-0535	7		IC DRVR TTL AND DUAL 2-INP	01295	SN75451BP
A1A2	08673-60082	9	1	DETECTOR MODULE ASSEMBLY	28480	08673-60082
A1A2C1	0160-4082	6	5	CAPACITOR-FDTHRU 1000PF 20% 200V CER	28480	0160-4082
A1A2C2	0160-4082	6		CAPACITOR-FDTHRU 1000PF 20% 200V CER	28480	0160-4082
A1A2C3	0160-4082	6		CAPACITOR-FDTHRU 1000PF 20% 200V CER	28480	0160-4082
A1A2C4	0160-4082	6		CAPACITOR-FDTHRU 1000PF 20% 200V CER	28480	0160-4082
A1A2C5				NOT ASSIGNED		
A1A2C6	0160-4083	7	3	CAPACITOR-FDTHRU 10PF 10% 200V CER	28480	0160-4083
A1A2C7	0160-4082	6		CAPACITOR-FDTHRU 1000PF 20% 200V CER	28480	0160-4082
A1A2C8	0160-4083	7		CAPACITOR-FDTHRU 10PF 10% 200V CER	28480	0160-4083
A1A2C9	0160-4083	7		CAPACITOR-FDTHRU 10PF 10% 200V CER	28480	0160-4083
A1A2MP1	0360-0535	0	17	TERMINAL TEST POINT PCB	00000	ORDER BY DESCRIPTION
A1A2MP2	0520-0127	6	22	SCREW-MACH 2-56 .188-IN-LG PAN-HD-POZI	00000	ORDER BY DESCRIPTION
A1A2MP3	0520-0163	0	4	SCREW-MACH 2-56 .188-IN-LG 82 DEG	00000	ORDER BY DESCRIPTION
A1A2MP4	2190-0045	8	32	WASHER-LK HLCL NO. 2 .068-IN-ID	28480	2190-0045
A1A2MP5	2190-0124	4	1	WASHER-LK INTL T NO. 10 .195-IN-ID	28480	2190-0124
A1A2MP6	2200-0103	2	7	SCREW-MACH 4-40 .25-IN-LG PAN-HD-POZI	00000	ORDER BY DESCRIPTION
A1A2MP7	2360-0117	6	1	SCREW-MACH 6-32 .375-IN-LG PAN-HD-POZI	00000	ORDER BY DESCRIPTION
A1A2MP8	2950-0078	9	1	NUT-HEX-DBL-CHAM 10-32-THD .067-IN-THK	28480	2950-0078
A1A2MP9	3050-0006	6	1	WASHER-SHLDR NO. 10 .2-IN-ID .5-IN-OD	28480	3050-0006
A1A2MP10	3050-0062	4	1	WASHER-FL NM NO. 8 .168-IN-ID .438-IN-OD	28480	3050-0062
A1A2MP11	08673-00020	9	1	COVER-DETECTOR MODULE	28480	08673-00020
A1A2MP12	08673-00022	1	1	INSULATOR-DETECTOR HOUSING	28480	08673-00022
A1A2MP13	08673-00038	9	1	COVER-DETECTOR HOUSING (REAR)	28480	08673-00038
A1A2MP14	08673-20083	6	1	BUSHING	28480	08673-20083

See introduction to this section for ordering information
*Indicates factory selected value

Table 6-3. Replaceable Parts

Reference Designation	HP Part Number	C D	Qty	Description	Mfr Code	Mfr Part Number
A1A2A1	08673-60081	8	1	ALC BOARD ASSEMBLY	28480	08673-60081
A1A2A1C1	0160-0576	5		CAPACITOR-FXD .1UF +-20% 50VDC CER	28480	0160-0576
A1A2A1C2	0180-0491	5	2	CAPACITOR-FXD 10UF+-20% 25VDC TA	28480	0180-0491
A1A2A1C3	0180-2620	6	3	CAPACITOR-FXD 2.2UF+-10% 50VDC TA	25088	D2R2GS1B50K
A1A2A1C4	0180-2620	6		CAPACITOR-FXD 2.2UF+-10% 50VDC TA	25088	D2R2GS1B50K
A1A2A1C5	0160-3454	4	1	CAPACITOR-FXD 220PF +-10% 1KVDC CER	28480	0160-3454
A1A2A1C6	0160-3879	7	15	CAPACITOR-FXD .01UF +-20% 100VDC CER	28480	0160-3879
A1A2A1C7	0160-2209	5	1	CAPACITOR-FXD 360PF +-5% 300VDC MICA	28480	0160-2209
A1A2A1C8	0160-3879	7		CAPACITOR-FXD .01UF +-20% 100VDC CER	28480	0160-3879
A1A2A1C9	0160-0161	4	2	CAPACITOR-FXD .01UF +-10% 200VDC POLYE	28480	0160-0161
A1A2A1C10	0160-3879	7		CAPACITOR-FXD .01UF +-20% 100VDC CER	28480	0160-3879
A1A2A1C11	0160-3879	7		CAPACITOR-FXD .01UF +-20% 100VDC CER	28480	0160-3879
A1A2A1C12	0160-0163	6	1	CAPACITOR-FXD .033UF +-10% 200VDC POLYE	28480	0160-0163
A1A2A1C13	0160-0576	5		CAPACITOR-FXD .1UF +-20% 50VDC CER	28480	0160-0576
A1A2A1C14	0160-0576	5		CAPACITOR-FXD .1UF +-20% 50VDC CER	28480	0160-0576
A1A2A1C15	0160-0573	2	3	CAPACITOR-FXD 4700PF +-20% 100VDC CER	28480	0160-0573
A1A2A1C16	0160-0573	2		CAPACITOR-FXD 4700PF +-20% 100VDC CER	28480	0160-0573
A1A2A1C17	0160-0127	2	2	CAPACITOR-FXD 1UF +-20% 25VDC CER	28480	0160-0127
A1A2A1C18	0160-4766	3	1	CAPACITOR-FXD 30PF +-5% 200VDC CER 0+-30	28480	0160-4766
A1A2A1C19	0160-0574	3	1	CAPACITOR-FXD .022UF +-20% 100VDC CER	28480	0160-0574
A1A2A1C20	0160-3879	7		CAPACITOR-FXD .01UF +-20% 100VDC CER	28480	0160-3879
A1A2A1CR1	1901-0040	1	12	DIODE-SWITCHING 30V 50MA 2NS DO-35	28480	1901-0040
A1A2A1CR2	1901-0040	1		DIODE-SWITCHING 30V 50MA 2NS DO-35	28480	1901-0040
A1A2A1CR3	1901-0040	1		DIODE-SWITCHING 30V 50MA 2NS DO-35	28480	1901-0040
A1A2A1CR4	1901-0040	1		DIODE-SWITCHING 30V 50MA 2NS DO-35	28480	1901-0040
A1A2A1J1	1250-1255	1	1	CONNECTOR-RF SMB M PC 50-OHM	28480	1250-1255
A1A2A1L1	9140-0144	0	6	INDUCTOR RF-CH-MLD 4.7UH 10% .105DX.26LG	28480	9140-0144
A1A2A1L2	9140-0144	0		INDUCTOR RF-CH-MLD 4.7UH 10% .105DX.26LG	28480	9140-0144
A1A2A1L3	9140-0144	0		INDUCTOR RF-CH-MLD 4.7UH 10% .105DX.26LG	28480	9140-0144
A1A2A1MP1	1480-0073	6	10	PIN-ROLL .062-IN-DIA .25-IN-LG BE-CU	28480	1480-0073
A1A2A1MP2	4040-0750	7	1	EXTR-PC BD RED POLYC .062-BD-THKNS	28480	4040-0750
A1A2A1Q1	1855-0276	6	3	TRANSISTOR J-FET 2N4416A N-CHAN D-MODE	01295	2N4416A
A1A2A1Q2	1855-0253	9	4	TRANSISTOR J-FET N-CHAN D-MODE TO-92 SI	28480	1855-0253
A1A2A1Q3	1855-0276	6		TRANSISTOR J-FET 2N4416A N-CHAN D-MODE	01295	2N4416A
A1A2A1Q4	1854-0477	7	4	TRANSISTOR NPN 2N2222A SI TO-18 PD=500MW	04713	2N2222A
A1A2A1Q5	1853-0322	9	4	TRANSISTOR PNP 2N2946A SI TO-46 PD=400MW	01295	2N2946A
A1A2A1Q6	1855-0276	6		TRANSISTOR J-FET 2N4416A N-CHAN D-MODE	01295	2N4416A
A1A2A1Q7	1853-0459	3	22	TRANSISTOR PNP SI PD=625MW FT=200MHZ	28480	1853-0459
A1A2A1Q8	1854-0477	7		TRANSISTOR NPN 2N2222A SI TO-18 PD=500MW	04713	2N2222A
A1A2A1Q9	1854-0810	2		TRANSISTOR NPN SI PD=625MW FT=200MHZ	28480	1854-0810
A1A2A1Q10	1853-0388	7	1	TRANSISTOR-DUAL PNP PD=600MW	28480	1853-0388
A1A2A1Q11	1853-0459	3		TRANSISTOR PNP SI PD=625MW FT=200MHZ	28480	1853-0459
A1A2A1Q12	1854-0810	2		TRANSISTOR NPN SI PD=625MW FT=200MHZ	28480	1854-0810
A1A2A1Q13	1855-0253	9		TRANSISTOR J-FET N-CHAN D-MODE TO-92 SI	28480	1855-0253
A1A2A1Q14	1854-0810	2		TRANSISTOR NPN SI PD=625MW FT=200MHZ	28480	1854-0810
A1A2A1Q15	1855-0251	7	1	TRANSISTOR MOSFET N-CHAN E-MODE TO-39 SI	28480	1855-0251
A1A2A1Q16	1853-0322	9		TRANSISTOR PNP 2N2946A SI TO-46 PD=400MW	01295	2N2946A
A1A2A1R1	2100-3273	1	1	RESISTOR-TRMR 2K 10% C SIDE-ADJ 1-TRN	28480	2100-3273
A1A2A1R2	0698-7576	8	2	RESISTOR 217 .1% .125W F TC=0+-25	19701	MF4C1/8-T9-217R-B
A1A2A1R3	0757-0409	8	1	RESISTOR 274 1% .125W F TC=0+-100	24546	C4-1/8-T0-274R-F
A1A2A1R4	0698-7280	1	6	RESISTOR 68.1K 1% .05W F TC=0+-100	24546	C3-1/8-T0-6812-F
A1A2A1R5	0698-7280	1		RESISTOR 68.1K 1% .05W F TC=0+-100	24546	C3-1/8-T0-6812-F
A1A2A1R6	0698-7280	1		RESISTOR 68.1K 1% .05W F TC=0+-100	24546	C3-1/8-T0-6812-F
A1A2A1R7	0698-5383	1	1	RESISTOR 11.5K 1% .125W F TC=0+-25	28480	0698-5383
A1A2A1R8	0698-7243	6	9	RESISTOR 1.96K 1% .05W F TC=0+-100	24546	C3-1/8-T0-1961-F
A1A2A1R9	0698-7222	1	4	RESISTOR 261 1% .05W F TC=0+-100	24546	C3-1/8-T0-261R-F
A1A2A1R10	0698-7280	1		RESISTOR 68.1K 1% .05W F TC=0+-100	24546	C3-1/8-T0-6812-F
A1A2A1R11	0698-7280	1		RESISTOR 68.1K 1% .05W F TC=0+-100	24546	C3-1/8-T0-6812-F
A1A2A1R12	0698-7260	7	23	RESISTOR 10K 1% .05W F TC=0+-100	24546	C3-1/8-T0-1002-F
A1A2A1R13	0698-7277	6	12	RESISTOR 51.1K 1% .05W F TC=0+-100	24546	C3-1/8-T0-5112-F
A1A2A1R14	0698-7260	7		RESISTOR 10K 1% .05W F TC=0+-100	24546	C3-1/8-T0-1002-F
A1A2A1R15	0699-0784	8	1	RESISTOR 17.55K .1% .1W F TC=0+-15	28480	0699-0784
A1A2A1R16	0698-7576	8		RESISTOR 217 .1% .125W F TC=0+-25	19701	MF4C1/8-T9-217R-B
A1A2A1R17	0699-0994	2	1	RESISTOR-28.544K .1% .125W F TC=0+-25PPM	28480	0699-0994
A1A2A1R18	0699-0096	5	2	RESISTOR 12K .1% .1W F TC=0+-10	28480	0699-0096
A1A2A1R19	0699-0993	1	1	RESISTOR 46.4K .1% .125W F TC=0+-25PPM	28480	0699-0993
A1A2A1R20	0699-0992	0	1	RESISTOR-227.2 .1% .125W F TC=0+-25PPM	28480	0699-0992
A1A2A1R21	0699-0991	9	1	RESISTOR-4.452K .1% .125W F TC=0+-25PPM	28480	0699-0991
A1A2A1R22	0698-7277	6		RESISTOR 51.1K 1% .05W F TC=0+-100	24546	C3-1/8-T0-5112-F
A1A2A1R23	0698-7260	7		RESISTOR 10K 1% .05W F TC=0+-100	24546	C3-1/8-T0-1002-F
A1A2A1R24				NOT ASSIGNED		
A1A2A1R25	0698-7234	5	1	RESISTOR 825 1% .05W F TC=0+-100	24546	C3-1/8-T0-825R-F

See introduction to this section for ordering information
*Indicates factory selected value

Table 6-3. Replaceable Parts

Reference Designation	HP Part Number	C D	Qty	Description	Mfr Code	Mfr Part Number
A1A2A1R26	0698-6329	7	2	RESISTOR 845 1% .125W F TC=0+-25	28480	0698-6329
A1A2A1R27	0698-7227	6	1	RESISTOR 422 1% .05W F TC=0+-100	24546	C3-1/8-T0-422R-F
A1A2A1R28	0698-7272	1	3	RESISTOR 31.6K 1% .05W F TC=0+-100	24546	C3-1/8-T0-3162-F
A1A2A1R29	0698-8827	4	2	RESISTOR 1M 1% .125W F TC=0+-100	28480	0698-8827
A1A2A1R30	2100-3353	8	5	RESISTOR-TRMR 20K 10% C SIDE-ADJ 1-TRN	28480	2100-3353
A1A2A1R31	0698-7284	5	4	RESISTOR 100K 1% .05W F TC=0+-100	24546	C3-1/8-T0-1003-F
A1A2A1R32	0698-7284	5		RESISTOR 100K 1% .05W F TC=0+-100	24546	C3-1/8-T0-1003-F
A1A2A1R33	0698-7243	6		RESISTOR 1.96K 1% .05W F TC=0+-100	24546	C3-1/8-T0-1961-F
A1A2A1R34	0698-7277	6		RESISTOR 51.1K 1% .05W F TC=0+-100	24546	C3-1/8-T0-5112-F
A1A2A1R35	0757-0274	5	4	RESISTOR 1.21K 1% .125W F TC=0+-100	24546	C4-1/8-T0-1211-F
A1A2A1R36	0757-0438	3	12	RESISTOR 5.11K 1% .125W F TC=0+-100	24546	C4-1/8-T0-5111-F
A1A2A1R37	0698-7198	0	2	RESISTOR 26.1 1% .05W F TC=0+-100	24546	C3-1/8-T0-26R1-F
A1A2A1R38	0698-7212	9	14	RESISTOR 100 1% .05W F TC=0+-100	24546	C3-1/8-T0-100R-F
A1A2A1R39	0698-7212	9		RESISTOR 100 1% .05W F TC=0+-100	24546	C3-1/8-T0-100R-F
A1A2A1R40	0698-7243	6		RESISTOR 1.96K 1% .05W F TC=0+-100	24546	C3-1/8-T0-1961-F
A1A2A1R41	0698-7261	8	2	RESISTOR 11K 1% .05W F TC=0+-100	24546	C3-1/8-T0-1102-F
A1A2A1R42	0698-7188	8	15	RESISTOR 10 1% .05W F TC=0+-100	24546	C3-1/8-T0-10R-F
A1A2A1R43	0698-7188	8		RESISTOR 10 1% .05W F TC=0+-100	24546	C3-1/8-T0-10R-F
A1A2A1R44	0698-7224	3	3	RESISTOR 316 1% .05W F TC=0+-100	24546	C3-1/8-T0-316R-F
A1A2A1R45	0757-0280	3	20	RESISTOR 1K 1% .125W F TC=0+-100	24546	C4-1/8-T0-1001-F
A1A2A1R46	0757-0280	3		RESISTOR 1K 1% .125W F TC=0+-100	24546	C4-1/8-T0-1001-F
A1A2A1R47	0698-7260	7		RESISTOR 10K 1% .05W F TC=0+-100	24546	C3-1/8-T0-1002-F
A1A2A1R48	0698-7212	9		RESISTOR 100 1% .05W F TC=0+-100	24546	C3-1/8-T0-100R-F
A1A2A1R49	0698-7212	9		RESISTOR 100 1% .05W F TC=0+-100	24546	C3-1/8-T0-100R-F
A1A2A1R50	0698-3459	8	1	RESISTOR 383K 1% .125W F TC=0+-100	28480	0698-3459
A1A2A1R51	0698-7236	7	4	RESISTOR 1K 1% .05W F TC=0+-100	24546	C3-1/8-T0-1001-F
A1A2A1R52	0698-7260	7		RESISTOR 10K 1% .05W F TC=0+-100	24546	C3-1/8-T0-1002-F
A1A2A1R53	0698-7243	6		RESISTOR 1.96K 1% .05W F TC=0+-100	24546	C3-1/8-T0-1961-F
A1A2A1R54	0698-7243	6		RESISTOR 1.96K 1% .05W F TC=0+-100	24546	C3-1/8-T0-1961-F
A1A2A1R55	0757-0290	5	2	RESISTOR 6.19K 1% .125W F TC=0+-100	19701	MF4C1/8-T0-6191-F
A1A2A1R56	0698-7260	7		RESISTOR 10K 1% .05W F TC=0+-100	24546	C3-1/8-T0-1002-F
A1A2A1R57	2100-3353	8		RESISTOR-TRMR 20K 10% C SIDE-ADJ 1-TRN	28480	2100-3353
A1A2A1R58	2100-3353	8		RESISTOR-TRMR 20K 10% C SIDE-ADJ 1-TRN	28480	2100-3353
A1A2A1R59	2100-3353	8		RESISTOR-TRMR 20K 10% C SIDE-ADJ 1-TRN	28480	2100-3353
A1A2A1R60	0698-7243	6		RESISTOR 1.96K 1% .05W F TC=0+-100	24546	C3-1/8-T0-1961-F
A1A2A1R61	2100-3353	8		RESISTOR-TRMR 20K 10% C SIDE-ADJ 1-TRN	28480	2100-3353
A1A2A1R62	0698-7277	6		RESISTOR 51.1K 1% .05W F TC=0+-100	24546	C3-1/8-T0-5112-F
A1A2A1R63	0698-7273	2	1	RESISTOR 34.8K 1% .05W F TC=0+-100	24546	C3-1/8-T0-3482-F
A1A2A1R64	0698-7272	1		RESISTOR 31.6K 1% .05W F TC=0+-100	24546	C3-1/8-T0-3162-F
A1A2A1R65	0698-7270	9	3	RESISTOR 26.1K 1% .05W F TC=0+-100	24546	C3-1/8-T0-2612-F
A1A2A1R66	0698-7282	3	1	RESISTOR 82.5K 1% .05W F TC=0+-100	24546	C3-1/8-T0-8252-F
A1A2A1R67	0698-7277	6		RESISTOR 51.1K 1% .05W F TC=0+-100	24546	C3-1/8-T0-5112-F
A1A2A1R68	0698-7277	6		RESISTOR 51.1K 1% .05W F TC=0+-100	24546	C3-1/8-T0-5112-F
A1A2A1R69	0698-7280	1		RESISTOR 68.1K 1% .05W F TC=0+-100	24546	C3-1/8-T0-6812-F
A1A2A1R70	0757-0180	2	3	RESISTOR 31.6 1% .125W F TC=0+-100	28480	0757-0180
A1A2A1R71	0698-7222	1		RESISTOR 261 1% .05W F TC=0+-100	24546	C3-1/8-T0-261R-F
A1A2A1R72	0698-7205	0	5	RESISTOR 51.1 1% .05W F TC=0+-100	24546	C3-1/8-T0-51R1-F
A1A2A1R73	0757-0346	2	7	RESISTOR 10 1% .125W F TC=0+-100	24546	C4-1/8-T0-10R0-F
A1A2A1R74	0698-7252	7	3	RESISTOR 4.64K 1% .05W F TC=0+-100	24546	C3-1/8-T0-4641-F
A1A2A1R75	0698-7243	6		RESISTOR 1.96K 1% .05W F TC=0+-100	24546	C3-1/8-T0-1961-F
A1A2A1R76	0698-7260	7		RESISTOR 10K 1% .05W F TC=0+-100	24546	C3-1/8-T0-1002-F
A1A2A1RT1	0837-0232	5	1	THERMISTOR-POS. TEMP. COEEF. 2.00K@25C	28480	0837-0232
A1A2A11P1	0360-0535	0		TERMINAL TEST POINT PCB	00000	ORDER BY DESCRIPTION
A1A2A1TP2	0360-0535	0		TERMINAL TEST POINT PCB	00000	ORDER BY DESCRIPTION
A1A2A1TP3	0360-0535	0		TERMINAL TEST POINT PCB	00000	ORDER BY DESCRIPTION
A1A2A1TP4	0360-0535	0		TERMINAL TEST POINT PCB	00000	ORDER BY DESCRIPTION
A1A2A11P5	0360-0535	0		TERMINAL TEST POINT PCB	00000	ORDER BY DESCRIPTION
A1A2A1U1	1826-0601	0	2	IC OP AMP PRCN TO-99 PKG	06665	OP-16FJ
A1A2A1U2	1826-0486	9	1	IC MULTIPLXR 4-CHAN-ANLG DUAL 16-DIP-P	04713	MC14052BCP
A1A2A1U3	1826-0488	1	1	IC OP AMP WB TO-99 PKG	27014	LM218H
A1A2A1U4	1826-0601	0		IC OP AMP PRCN TO-99 PKG	06665	OP-16FJ
A1A2A1U5	1826-0720	4	1	IC SWITCH ANLG QUAD 16-DIP-C PKG	06665	SW-02FQ
A1A2A1VR1	1902-0951	5	4	DIODE-ZNR 5.1V 5% DO-35 PD=.4W TC=+.035%	28480	1902-0951
A1A2A2	08673-60031	8	1	DETECTOR BOARD ASSEMBLY	28480	08673-60031
A1A2A2C1	0180-2661	5	3	CAPACITOR-FXD 1UF+-10% 50VDC TA	25088	D1R0GS1A50K
A1A2A2C2	0160-3879	7		CAPACITOR-FXD .01UF +-20% 100VDC CER	28480	0160-3879
A1A2A2C3	0180-2731	0	1	CAPACITOR-FXD 2.2UF+-10% 20VDC TA	28480	0180-2731
A1A2A2C4	0160-3879	7		CAPACITOR-FXD .01UF +-20% 100VDC CER	28480	0160-3879
A1A2A2C5	0160-3879	7		CAPACITOR-FXD .01UF +-20% 100VDC CER	28480	0160-3879
A1A2A2C6	0160-3879	7		CAPACITOR-FXD .01UF +-20% 100VDC CER	28480	0160-3879
A1A2A2C7	0160-3879	7		CAPACITOR-FXD .01UF +-20% 100VDC CER	28480	0160-3879
A1A2A2C8	0180-2661	5		CAPACITOR-FXD 1UF+-10% 50VDC TA	25088	D1R0GS1A50K
A1A2A2C9	0160-2244	8	1	CAPACITOR-FXD 3PF +-.25PF 500VDC CER	28480	0160-2244
A1A2A2C10	0160-0174	9	5	CAPACITOR-FXD .47UF +80-20% 25VDC CER	28480	0160-0174

See introduction to this section for ordering information
*Indicates factory selected value

Table 6-3. Replaceable Parts

Reference Designation	HP Part Number	C D	Qty	Description	Mfr Code	Mfr Part Number
A1A2A2C11	0160-0576	5		CAPACITOR-FXD .1UF +-20% 50VDC CER	28480	0160-0576
A1A2A2C12	0160-3877	5	4	CAPACITOR-FXD 100PF +-20% 200VDC CER	28480	0160-3877
A1A2A2C13	0160-2256	2	1	CAPACITOR-FXD 9.1PF +-.25PF 500VDC CER	28480	0160-2256
A1A2A2C14	0160-2250	6	2	CAPACITOR-FXD 5.1PF +-.25PF 500VDC CER	28480	0160-2250
A1A2A2C15	0160-2250	6		CAPACITOR-FXD 5.1PF +-.25PF 500VDC CER	28480	0160-2250
A1A2A2CR1	1901-0050	3		DIODE-SWITCHING 80V 200MA 2NS DO-35	28480	1901-0050
A1A2A2CR2	1901-0539	3	17	DIODE-SM SIG SCHOTTKY	28480	1901-0539
A1A2A2CR3	1901-0050	3		DIODE-SWITCHING 80V 200MA 2NS DO-35	28480	1901-0050
A1A2A2E1	9170-0962	3	5	CORE-SHIELDING BEAD	28480	9170-0962
A1A2A2E2	9170-0962	3		CORE-SHIELDING BEAD	28480	9170-0962
A1A2A2E3	9170-0962	3		CORE-SHIELDING BEAD	28480	9170-0962
A1A2A2E4	9170-0962	3		CORE-SHIELDING BEAD	28480	9170-0962
A1A2A2E5	9170-0962	3		CORE-SHIELDING BEAD	28480	9170-0962
A1A2A2J1	1250-1220	0	1	CONNECTOR-RF SMC M PC 50-OHM	28480	1250-1220
A1A2A2Q1	1853-0459	3		TRANSISTOR PNP SI PD=625MW FT=200MHZ	28480	1853-0459
A1A2A2Q2	1854-0345	8	3	TRANSISTOR NPN 2N5179 SI TO-72 PD=200MW	04713	2N5179
A1A2A2Q3	1855-0268	6	2	TRANSISTOR J-FET N-CHAN D-MODE TO-92 SI	17856	J309
A1A2A2Q4	1855-0268	6		TRANSISTOR J-FET N-CHAN D-MODE TO-92 SI	17856	J309
A1A2A2Q5	1854-0345	8		TRANSISTOR NPN 2N5179 SI TO-72 PD=200MW	04713	2N5179
A1A2A2Q6	1854-0345	8		TRANSISTOR NPN 2N5179 SI TO-72 PD=200MW	04713	2N5179
A1A2A2Q7	1853-0405	9	9	TRANSISTOR PNP SI PD=300MW FT=850MHZ	04713	2N4209
A1A2A2Q8	1853-0075	9	1	TRANSISTOR-DUAL PNP PD=400MW	28480	1853-0075
A1A2A2Q9	1854-0475	5	3	TRANSISTOR-DUAL NPN PD=750MW	28480	1854-0475
A1A2A2Q10	1853-0451	5	2	TRANSISTOR PNP 2N3799 SI TO-18 PD=360MW	01295	2N3799
A1A2A2Q11	1853-0451	5		TRANSISTOR PNP 2N3799 SI TO-18 PD=360MW	01295	2N3799
A1A2A2Q12	1854-0810	2		TRANSISTOR NPN SI PD=625MW FT=200MHZ	28480	1854-0810
A1A2A2Q13	1854-0295	7	1	TRANSISTOR-DUAL NPN PD=400MW	28480	1854-0295
A1A2A2R1	0811-3591	1	1	RESISTOR-0.2+-0.5% 1W WW F TC=+-90PPM/C	28480	0811-3591
A1A2A2R2	0698-7188	8		RESISTOR 10 1% .05W F TC=0+-100	24546	C3-1/8-TO-10R-F
A1A2A2R3	0698-7188	8		RESISTOR 10 1% .05W F TC=0+-100	24546	C3-1/8-TO-10R-F
A1A2A2R4	0698-7198	0		RESISTOR 26.1 1% .05W F TC=0+-100	24546	C3-1/8-TO-26R1-F
A1A2A2R5	0698-7188	8		RESISTOR 10 1% .05W F TC=0+-100	24546	C3-1/8-TO-10R-F
A1A2A2R6	0698-7188	8		RESISTOR 10 1% .05W F TC=0+-100	24546	C3-1/8-TO-10R-F
A1A2A2R7	0698-7260	7		RESISTOR 10K 1% .05W F TC=0+-100	24546	C3-1/8-TO-1002-F
A1A2A2R8	0698-7212	9		RESISTOR 100 1% .05W F TC=0+-100	24546	C3-1/8-TO-100R-F
A1A2A2R9	0698-7260	7		RESISTOR 10K 1% .05W F TC=0+-100	24546	C3-1/8-TO-1002-F
A1A2A2R10	0757-0419	0	4	RESISTOR 681 1% .125W F TC=0+-100	24546	C4-1/8-TO-681R-F
A1A2A2R11	0698-7244	7	7	RESISTOR 2.15K 1% .05W F TC=0+-100	24546	C3-1/8-TO-2151-F
A1A2A2R12	2100-2039	5	2	RESISTOR-TRMR 20K 5% WW SIDE-ADJ 10-TRN	28480	2100-2039
A1A2A2R13	0698-7212	9		RESISTOR 100 1% .05W F TC=0+-100	24546	C3-1/8-TO-100R-F
A1A2A2R14	0698-7244	7		RESISTOR 2.15K 1% .05W F TC=0+-100	24546	C3-1/8-TO-2151-F
A1A2A2R15	0698-7244	7		RESISTOR 2.15K 1% .05W F TC=0+-100	24546	C3-1/8-TO-2151-F
A1A2A2R16	0698-7202	7	2	RESISTOR 38.3 1% .05W F TC=0+-100	24546	C3-1/8-TO-38R3-F
A1A2A2R17	0698-7244	7		RESISTOR 2.15K 1% .05W F TC=0+-100	24546	C3-1/8-TO-2151-F
A1A2A2R18	0698-7244	7		RESISTOR 2.15K 1% .05W F TC=0+-100	24546	C3-1/8-TO-2151-F
A1A2A2R19	0698-7244	7		RESISTOR 2.15K 1% .05W F TC=0+-100	24546	C3-1/8-TO-2151-F
A1A2A2R20	0698-7243	6		RESISTOR 1.96K 1% .05W F TC=0+-100	24546	C3-1/8-TO-1961-F
A1A2A2R21	2100-0545	4	2	RESISTOR-TRMR 1K 10% C SIDE-ADJ 17-TRN	32997	3292X-1-102
A1A2A2R22	0698-7272	1		RESISTOR 31.6K 1% .05W F TC=0+-100	24546	C3-1/8-TO-3162-F
A1A2A2R23	0698-7229	8	2	RESISTOR 511 1% .05W F TC=0+-100	24546	C3-1/8-TO-511R-F
A1A2A2R24	0698-7202	7		RESISTOR 38.3 1% .05W F TC=0+-100	24546	C3-1/8-TO-38R3-F
A1A2A2R25	0698-7236	7		RESISTOR 1K 1% .05W F TC=0+-100	24546	C3-1/8-TO-1001-F
A1A2A2R26	2100-3751	0	1	RESISTOR-TRMR 10 10% C SIDE-ADJ 17-TRN	28480	2100-3751
A1A2A2R27	0699-0068	1	2	RESISTOR 1.47M 1% .125W F TC=0+-100	28480	0699-0068
A1A2A2R28	0811-2031	2	1	RESISTOR 815 3% .25W PWW TC=+5900+-300	20940	143-1/4-815R-3
A1A2A2R29	2100-1922	3	1	RESISTOR-TRMR 5K 10% C SIDE-ADJ 22-TRN	32997	3059Y-1-502
A1A2A2R30	0698-7275	4	1	RESISTOR 42.2K 1% .05W F TC=0+-100	24546	C3-1/8-TO-4222-F
A1A2A2R31	0698-7279	8	1	RESISTOR 61.9K 1% .05W F TC=0+-100	24546	C3-1/8-TO-6192-F
A1A2A2R32	0698-6320	8	2	RESISTOR 5K .1% .125W F TC=0+-25	03888	PME55-1/8-T9-5001-B
A1A2A2R33	0698-7253	8	2	RESISTOR 5.11K 1% .05W F TC=0+-100	24546	C3-1/8-TO-5111-F
A1A2A2R34	0698-7216	3	2	RESISTOR 147 1% .05W F TC=0+-100	24546	C3-1/8-TO-147R-F
A1A2A2R35	0757-0317	7	6	RESISTOR 1.33K 1% .125W F TC=0+-100	24546	C4-1/8-TO-1331-F
A1A2A2R36	0698-7249	2	1	RESISTOR 3.48K 1% .05W F TC=0+-100	24546	C3-1/8-TO-3481-F
A1A2A2R37	0698-7253	8		RESISTOR 5.11K 1% .05W F TC=0+-100	24546	C3-1/8-TO-5111-F
A1A2A2R38	0698-7248	1	1	RESISTOR 3.16K 1% .05W F TC=0+-100	24546	C3-1/8-TO-3161-F
A1A2A2R39	0698-7394	8	1	RESISTOR 698 .1% .125W F TC=0+-25	19701	MF4C1/8-T9-698R-R
A1A2A2R40	2100-0545	4		RESISTOR-TRMR 1K 10% C SIDE-ADJ 17-TRN	32997	3292X-1-102
A1A2A2R41	0698-8779	5	1	RESISTOR 280 .1% .1W F TC=0+-5	28480	0698-8779
A1A2A2R42	0698-6320	8		RESISTOR 5K .1% .125W F TC=0+-25	03888	PME55-1/8-T9-5001-B
A1A2A2R43	0698-6329	7		RESISTOR 845 1% .125W F TC=0+-25	28480	0698-6329
A1A2A2R44	0757-0274	5		RESISTOR 1.21K 1% .125W F TC=0+-100	24546	C4-1/8-TO-1211-F
A1A2A2RT1	0837-0124	4	1	THERMISTOR DISC 250-OHM TC=-4.4%/C-DEG	28480	0837-0124

See introduction to this section for ordering information
*Indicates factory selected value

Table 6-3. Replaceable Parts

Reference Designation	HP Part Number	C D	Qty	Description	Mfr Code	Mfr Part Number
A1A2A2TP1	0360-0535	0		TERMINAL TEST POINT PCB	00000	ORDER BY DESCRIPTION
A1A2A2TP2	0360-0535	0		TERMINAL TEST POINT PCB	00000	ORDER BY DESCRIPTION
A1A2A2U1	1826-0471	2	2	IC OP AMP LOW-DRIFT TO-99 PKG	28480	1826-0471
A1A3	08673-60030	7	1	FUNCTION BOARD ASSEMBLY	28480	08673-60030
A1A3C1	0180-0374	3	2	CAPACITOR-FXD 10UF+-10% 20VDC TA	56289	150D106X9020B2
A1A3C2	0160-0570	9	17	CAPACITOR-FXD 220PF +-20% 100VDC CER	20932	5024EM100RD221M
A1A3C3	0180-0197	8		CAPACITOR-FXD 2.2UF+-10% 20VDC TA	56289	150D225X9020A2
A1A3C4	0180-0291	3		CAPACITOR-FXD 1UF+-10% 35VDC TA	56289	150D105X9035A2
A1A3C5	0180-0197	8		CAPACITOR-FXD 2.2UF+-10% 20VDC TA	56289	150D225X9020A2
A1A3C6	0160-0576	5		CAPACITOR-FXD .1UF +-20% 50VDC CER	28480	0160-0576
A1A3C7	0160-0576	5		CAPACITOR-FXD .1UF +-20% 50VDC CER	28480	0160-0576
A1A3C8	0160-0576	5		CAPACITOR-FXD .1UF +-20% 50VDC CER	28480	0160-0576
A1A3C9	0160-2207	3	1	CAPACITOR-FXD 300PF +-5% 300VDC MICA	28480	0160-2207
A1A3C10	0160-2203	9	1	CAPACITOR-FXD 91PF +-5% 300VDC MICA 0+70	28480	0160-2203
A1A3C11	0160-0576	5		CAPACITOR-FXD .1UF +-20% 50VDC CER	28480	0160-0576
A1A3C12	0160-0576	5		CAPACITOR-FXD .1UF +-20% 50VDC CER	28480	0160-0576
A1A3C13	0160-2265	3	2	CAPACITOR-FXD 22PF +-5% 500VDC CER 0+-30	28480	0160-2265
A1A3C14	0160-2257	3	3	CAPACITOR-FXD 10PF +-5% 500VDC CER 0+-60	28480	0160-2257
A1A3C15	0160-3878	6	6	CAPACITOR-FXD 1000PF +-20% 100VDC CER	28480	0160-3878
A1A3C16	0160-0576	5		CAPACITOR-FXD .1UF +-20% 50VDC CER	28480	0160-0576
A1A3C17	0160-0576	5		CAPACITOR-FXD .1UF +-20% 50VDC CER	28480	0160-0576
A1A3C18	0160-0155	6	1	CAPACITOR-FXD 3300PF +-10% 200VDC POLYE	28480	0160-0155
A1A3C19	0160-0576	5		CAPACITOR-FXD .1UF +-20% 50VDC CER	28480	0160-0576
A1A3C20	0160-0128	3	2	CAPACITOR-FXD 2.2UF +-20% 50VDC CER	28480	0160-0128
A1A3C21	0160-4031	5	2	CAPACITOR-FXD 330PF +-5% 100VDC CER	28480	0160-4031
A1A3C22	0160-0128	3		CAPACITOR-FXD 2.2UF +-20% 50VDC CER	28480	0160-0128
A1A3C23	0160-3876	4	4	CAPACITOR-FXD 47PF +-20% 200VDC CER	28480	0160-3876
A1A3C24	0160-2055	9	10	CAPACITOR-FXD .01UF +80-20% 100VDC CER	28480	0160-2055
A1A3C25	0160-0576	5		CAPACITOR-FXD .1UF +-20% 50VDC CER	28480	0160-0576
A1A3C26	0160-0576	5		CAPACITOR-FXD .1UF +-20% 50VDC CER	28480	0160-0576
A1A3C27	0160-0576	5		CAPACITOR-FXD .1UF +-20% 50VDC CER	28480	0160-0576
A1A3C28	0160-0576	5		CAPACITOR-FXD .1UF +-20% 50VDC CER	28480	0160-0576
A1A3C29	0160-2265	3		CAPACITOR-FXD 22PF +-5% 500VDC CER 0+-30	28480	0160-2265
A1A3C30	0160-0576	5		CAPACITOR-FXD .1UF +-20% 50VDC CER	28480	0160-0576
A1A3C31	0160-0576	5		CAPACITOR-FXD .1UF +-20% 50VDC CER	28480	0160-0576
A1A3C32	0160-0161	4		CAPACITOR-FXD .01UF +-10% 200VDC POLYE	28480	0160-0161
A1A3C33	0160-4386	3	1	CAPACITOR-FXD 33PF +-5% 200VDC CER 0+-30	28480	0160-4386
A1A3C34	0160-2055	9		CAPACITOR-FXD .01UF +80-20% 100VDC CER	28480	0160-2055
A1A3C35	0160-0576	5		CAPACITOR-FXD .1UF +-20% 50VDC CER	28480	0160-0576
A1A3C36	0160-0576	5		CAPACITOR-FXD .1UF +-20% 50VDC CER	28480	0160-0576
A1A3C37	0160-0576	5		CAPACITOR-FXD .1UF +-20% 50VDC CER	28480	0160-0576
A1A3CR1	1901-0050	3		DIODE-SWITCHING 80V 200MA 2NS DO-35	28480	1901-0050
A1A3CR2	1901-0050	3		DIODE-SWITCHING 80V 200MA 2NS DO-35	28480	1901-0050
A1A3CR3	1901-0050	3		DIODE-SWITCHING 80V 200MA 2NS DO-35	28480	1901-0050
A1A3CR4	1901-0050	3		DIODE-SWITCHING 80V 200MA 2NS DO-35	28480	1901-0050
A1A3CR5	1901-0539	3		DIODE-SM SIG SCHOTTKY	28480	1901-0539
A1A3CR6	1901-0539	3		DIODE-SM SIG SCHOTTKY	28480	1901-0539
A1A3CR7	1901-0050	3		DIODE-SWITCHING 80V 200MA 2NS DO-35	28480	1901-0050
A1A3CR8	1901-0050	3		DIODE-SWITCHING 80V 200MA 2NS DO-35	28480	1901-0050
A1A3CR9	1901-0050	3		DIODE-SWITCHING 80V 200MA 2NS DO-35	28480	1901-0050
A1A3CR10	1901-0050	3		DIODE-SWITCHING 80V 200MA 2NS DO-35	28480	1901-0050
A1A3CR11	1901-0050	3		DIODE-SWITCHING 80V 200MA 2NS DO-35	28480	1901-0050
A1A3CR12	1901-0050	3		DIODE-SWITCHING 80V 200MA 2NS DO-35	28480	1901-0050
A1A3CR13	1901-0050	3		DIODE-SWITCHING 80V 200MA 2NS DO-35	28480	1901-0050
A1A3L1	9140-0144	0		INDUCTOR RF-CH-MLD 4.7UH 10% .105DX.26LG	28480	9140-0144
A1A3L2	9140-0144	0		INDUCTOR RF-CH-MLD 4.7UH 10% .105DX.26LG	28480	9140-0144
A1A3L3	9140-0144	0		INDUCTOR RF-CH-MLD 4.7UH 10% .105DX.26LG	28480	9140-0144
A1A3MP1	1480-0073	6		PIN-ROLL .062-IN-DIA .25-IN-LG BE-CU	28480	1480-0073
A1A3MP2	4040-0748	3	6	EXTR-PC BD BLK POLYC .062-BD-THKNS	28480	4040-0748
A1A3MP3	4040-0751	8	1	EXTR-PC BD ORN POLYC .062-BD-THKNS	28480	4040-0751
A1A3Q1	1854-0810	2		TRANSISTOR NPN SI PD=625MW FT=200MHZ	28480	1854-0810
A1A3Q2	1855-0327	8	1	TRANSISTOR J-FET 2N4416 N-CHAN D-MODE	01295	2N4416
A1A3Q3	1854-0688	2	1	TRANSISTOR-DUAL NPN TO-71	28480	1854-0688
A1A3Q4	1854-0810	2		TRANSISTOR NPN SI PD=625MW FT=200MHZ	28480	1854-0810
A1A3Q5	1854-0475	5		TRANSISTOR-DUAL NPN PD=750MW	28480	1854-0475
A1A3Q6	1853-0459	3		TRANSISTOR PNP SI PD=625MW FT=200MHZ	28480	1853-0459
A1A3Q7	1854-0810	2		TRANSISTOR NPN SI PD=625MW FT=200MHZ	28480	1854-0810
A1A3Q8	1855-0414	4	2	TRANSISTOR J-FET 2N4393 N-CHAN D-MODE	04713	2N4393
A1A3Q9	1854-0810	2		TRANSISTOR NPN SI PD=625MW FT=200MHZ	28480	1854-0810
A1A3Q10	1855-0253	9		TRANSISTOR J-FET N-CHAN D-MODE TO-92 SI	28480	1855-0253
A1A3Q11	1853-0322	9		TRANSISTOR PNP 2N2946A SI TO-46 PD=400MW	01295	2N2946A
A1A3Q12	1853-0322	9		TRANSISTOR PNP 2N2946A SI TO-46 PD=400MW	01295	2N2946A
A1A3Q13	1853-0316	1	1	TRANSISTOR-DUAL PNP PD=500MW	28480	1853-0316
A1A3Q14	1854-0810	2		TRANSISTOR NPN SI PD=625MW FT=200MHZ	28480	1854-0810
A1A3Q15	1855-0253	9		TRANSISTOR J-FET N-CHAN D-MODE TO-92 SI	28480	1855-0253

See introduction to this section for ordering information
*Indicates factory selected value

Table 6-3. Replaceable Parts

Reference Designation	HP Part Number	C D	Qty	Description	Mfr Code	Mfr Part Number
A1A3R1	0757-0346	2		RESISTOR 10 1% .125W F TC=0+-100	24546	C4-1/8-T0-10R0-F
A1A3R2	0698-0083	8		RESISTOR 1.96K 1% .125W F TC=0+-100	24546	C4-1/8-T0-1961-F
A1A3R3	0698-8812	7	4	RESISTOR 1 1% .125W F TC=0+-100	28480	0698-8812
A1A3R4	0698-3101	7	1	RESISTOR 2.87K 1% .5W F TC=0+-100	28480	0698-3101
A1A3R5	0757-0421	4	2	RESISTOR 825 1% .125W F TC=0+-100	24546	C4-1/8-T0-825R-F
A1A3R6	0698-7261	8		RESISTOR 11K 1% .05W F TC=0+-100	24546	C3-1/8-T0-1102-F
A1A3R7	0757-0458	7	6	RESISTOR 51.1K 1% .125W F TC=0+-100	24546	C4-1/8-T0-5112-F
A1A3R8	0757-0442	9	15	RESISTOR 10K 1% .125W F TC=0+-100	24546	C4-1/8-T0-1002-F
A1A3R9	0698-5808	5	1	RESISTOR 4K 1% .125W F TC=0+-100	24546	C4-1/8-T0-4001-F
A1A3R10	0698-7277	6		RESISTOR 51.1K 1% .05W F TC=0+-100	24546	C3-1/8-T0-5112-F
A1A3R11	0757-0416	7	9	RESISTOR 511 1% .125W F TC=0+-100	24546	C4-1/8-T0-511R-F
A1A3R12	2100-2039	5		RESISTOR-TRMR 20K 5% WW SIDE-ADJ 10-TRN	28480	2100-2039
A1A3R13	0698-3447	4	3	RESISTOR 422 1% .125W F TC=0+-100	24546	C4-1/8-T0-422R-F
A1A3R14	0698-3160	8	7	RESISTOR 31.6K 1% .125W F TC=0+-100	24546	C4-1/8-T0-3162-F
A1A3R15	1810-0205	7	1	NETWORK-RES 8-SIP4.7K OHM X 7	01121	208A472
A1A3R16	0757-0431	6	1	RESISTOR 2.43K 1% .125W F TC=0+-100	24546	C4-1/8-T0-2431-F
A1A3R17	0698-7238	9	2	RESISTOR 1.21K 1% .05W F TC=0+-100	24546	C3-1/8-T0-1211-F
A1A3R18	0757-0280	3		RESISTOR 1K 1% .125W F TC=0+-100	24546	C4-1/8-T0-1001-F
A1A3R19	0757-0442	9		RESISTOR 10K 1% .125W F TC=0+-100	24546	C4-1/8-T0-1002-F
A1A3R20	0698-7281	2	1	RESISTOR 75K 2% .05W F TC=0+-100	24546	C3-1/8-T0-7502-G
A1A3R21	0698-7262	9	1	RESISTOR 12.1K 1% .05W F TC=0+-100	24546	C3-1/8-T0-1212-F
A1A3R22	0698-7254	9	2	RESISTOR 5.62K 1% .05W F TC=0+-100	24546	C3-1/8-T0-5621-F
A1A3R23	0757-0441	8	5	RESISTOR 8.25K 1% .125W F TC=0+-100	24546	C4-1/8-T0-8251-F
A1A3R24	0698-4014	3	1	RESISTOR 787 1% .125W F TC=0+-100	24546	C4-1/8-T0-787R-F
A1A3R25	0698-3510	2	1	RESISTOR 453 1% .125W F TC=0+-100	24546	C4-1/8-T0-453R-F
A1A3R26	0698-4414	7	1	RESISTOR 158 1% .125W F TC=0+-100	24546	C4-1/8-T0-158R-F
A1A3R27	0698-7240	3	1	RESISTOR 1.47K 1% .05W F TC=0+-100	24546	C3-1/8-T0-1471-F
A1A3R28	0698-3495	2	1	RESISTOR 866 1% .125W F TC=0+-100	24546	C4-1/8-T0-866R-F
A1A3R29	0698-3151	7	3	RESISTOR 2.87K 1% .125W F TC=0+-100	24546	C4-1/8-T0-2871-F
A1A3R30	0757-0441	8		RESISTOR 8.25K 1% .125W F TC=0+-100	24546	C4-1/8-T0-8251-F
A1A3R31	2100-3351	6	2	RESISTOR-TRMR 500 10% C SIDE-ADJ 1-TRN	28480	2100-3351
A1A3R32	0757-0317	7		RESISTOR 1.33K 1% .125W F TC=0+-100	24546	C4-1/8-T0-1331-F
A1A3R33	0698-7222	1		RESISTOR 261 1% .05W F TC=0+-100	24546	C3-1/8-T0-261R-F
A1A3R34	0698-7222	1		RESISTOR 261 1% .05W F TC=0+-100	24546	C3-1/8-T0-261R-F
A1A3R35	0757-0441	8		RESISTOR 8.25K 1% .125W F TC=0+-100	24546	C4-1/8-T0-8251-F
A1A3R36	0698-7244	7		RESISTOR 2.15K 1% .05W F TC=0+-100	24546	C3-1/8-T0-2151-F
A1A3R37	0698-7254	9		RESISTOR 5.62K 1% .05W F TC=0+-100	24546	C3-1/8-T0-5621-F
A1A3R38	0757-0458	7		RESISTOR 51.1K 1% .125W F TC=0+-100	24546	C4-1/8-T0-5112-F
A1A3R39	0698-7277	6		RESISTOR 51.1K 1% .05W F TC=0+-100	24546	C3-1/8-T0-5112-F
A1A3R40	0698-7277	6		RESISTOR 51.1K 1% .05W F TC=0+-100	24546	C3-1/8-T0-5112-F
A1A3R41	0757-0439	4	2	RESISTOR 6.81K 1% .125W F TC=0+-100	24546	C4-1/8-T0-6811-F
A1A3R42	0698-0083	8		RESISTOR 1.96K 1% .125W F TC=0+-100	24546	C4-1/8-T0-1961-F
A1A3R43	2100-3274	2	4	RESISTOR-TRMR 10K 10% C SIDE-ADJ 1-TRN	28480	2100-3274
A1A3R44	0698-0083	8		RESISTOR 1.96K 1% .125W F TC=0+-100	24546	C4-1/8-T0-1961-F
A1A3R45	0757-0458	7		RESISTOR 51.1K 1% .125W F TC=0+-100	24546	C4-1/8-T0-5112-F
A1A3R46	0757-0438	3		RESISTOR 5.11K 1% .125W F TC=0+-100	24546	C4-1/8-T0-5111-F
A1A3R47	0698-3456	5	1	RESISTOR 287K 1% .125W F TC=0+-100	24546	C4-1/8-T0-2873-F
A1A3R48	0698-3447	4		RESISTOR 422 1% .125W F TC=0+-100	24546	C4-1/8-T0-422R-F
A1A3R49	0698-0083	8		RESISTOR 1.96K 1% .125W F TC=0+-100	24546	C4-1/8-T0-1961-F
A1A3R50	0757-0447	4	3	RESISTOR 16.2K 1% .125W F TC=0+-100	24546	C4-1/8-T0-1622-F
A1A3R51	2100-3352	7	1	RESISTOR-TRMR 1K 10% C SIDE-ADJ 1-TRN	28480	2100-3352
A1A3R52	0757-0428	1	3	RESISTOR 1.62K 1% .125W F TC=0+-100	24546	C4-1/8-T0-1621-F
A1A3R53	0698-7212	9		RESISTOR 100 1% .05W F TC=0+-100	24546	C3-1/8-T0-100R-F
A1A3R54	0698-7212	9		RESISTOR 100 1% .05W F TC=0+-100	24546	C3-1/8-T0-100R-F
A1A3R55	0757-0317	7		RESISTOR 1.33K 1% .125W F TC=0+-100	24546	C4-1/8-T0-1331-F
A1A3R56	0698-7268	5	1	RESISTOR 21.5K 1% .05W F TC=0+-100	24546	C3-1/8-T0-2152-F
A1A3R57	0698-3157	3	4	RESISTOR 19.6K 1% .125W F TC=0+-100	24546	C4-1/8-T0-1962-F
A1A3R58	0757-0280	3		RESISTOR 1K 1% .125W F TC=0+-100	24546	C4-1/8-T0-1001-F
A1A3R59	0757-0280	3		RESISTOR 1K 1% .125W F TC=0+-100	24546	C4-1/8-T0-1001-F
A1A3R60	0698-3158	4	2	RESISTOR 23.7K 1% .125W F TC=0+-100	24546	C4-1/8-T0-2372-F
A1A3R61	0698-7270	9		RESISTOR 26.1K 1% .05W F TC=0+-100	24546	C3-1/8-T0-2612-F
A1A3R62	0698-7270	9		RESISTOR 26.1K 1% .05W F TC=0+-100	24546	C3-1/8-T0-2612-F
A1A3R63	0698-3458	7	1	RESISTOR 348K 1% .125W F TC=0+-100	28480	0698-3458
A1A3R64	0698-3236	9	2	RESISTOR 15K .25% .125W F TC=0+-50	28480	0698-3236
A1A3R65	0698-7212	9		RESISTOR 100 1% .05W F TC=0+-100	24546	C3-1/8-T0-100R-F
A1A3R66	0698-7212	9		RESISTOR 100 1% .05W F TC=0+-100	24546	C3-1/8-T0-100R-F
A1A3R67	0698-3155	1	2	RESISTOR 4.64K 1% .125W F TC=0+-100	24546	C4-1/8-T0-4641-F
A1A3R68	0698-7933	1	1	RESISTOR 3.83K .1% .125W F TC=0+-25	19701	MF4C1/8-T9-3831-B
A1A3R69	0698-3445	2	1	RESISTOR 348 1% .125W F TC=0+-100	24546	C4-1/8-T0-348R-F
A1A3R70	0757-0401	0	13	RESISTOR 100 1% .125W F TC=0+-100	24546	C4-1/8-T0-101-F
A1A3R71	0698-3236	9		RESISTOR 15K .25% .125W F TC=0+-50	28480	0698-3236
A1A3R72	2100-3154	7	5	RESISTOR-TRMR 1K 10% C SIDE-ADJ 17-TRN	02111	43P102
A1A3R73	0698-7252	7		RESISTOR 4.64K 1% .05W F TC=0+-100	24546	C3-1/8-T0-4641-F
A1A3R74	0698-7243	6		RESISTOR 1.96K 1% .05W F TC=0+-100	24546	C3-1/8-T0-1961-F
A1A3R75	0698-7260	7		RESISTOR 10K 1% .05W F TC=0+-100	24546	C3-1/8-T0-1002-F

See introduction to this section for ordering information
*Indicates factory selected value

Table 6-3. Replaceable Parts

Reference Designation	HP Part Number	C D	Qty	Description	Mfr Code	Mfr Part Number
A1A3R76	0698-7277	6		RESISTOR 51.1K 1% .05W F TC=0+-100	24546	C3-1/8-T0-5112-F
A1A3R77	0698-7255	0	1	RESISTOR 6.19K 1% .05W F TC=0+-100	24546	C3-1/8-T0-6191-F
A1A3R78	0698-7277	6		RESISTOR 51.1K 1% .05W F TC=0+-100	24546	C3-1/8-T0-5112-F
A1A3R79	0757-0402	1	2	RESISTOR 110 1% .125W F TC=0+-100	24546	C4-1/8-T0-111-F
A1A3R80	0698-3157	3		RESISTOR 19.6K 1% .125W F TC=0+-100	24546	C4-1/8-T0-1962-F
A1A3R81	0698-8466	7	1	RESISTOR 942 .5% .125W F TC=0+-50	28480	0698-8466
A1A3R82	0757-0317	7		RESISTOR 1.33K 1% .125W F TC=0+-100	24546	C4-1/8-T0-1331-F
A1A3R83	2100-3349	2	1	RESISTOR-TRMR 100 10% C SIDE-ADJ 1-TRN	28480	2100-3349
A1A3R84	0757-0465	6	3	RESISTOR 100K 1% .125W F TC=0+-100	24546	C4-1/8-T0-1003-F
A1A3R85	0698-7260	7		RESISTOR 10K 1% .05W F TC=0+-100	24546	C3-1/8-T0-1002-F
A1A3R86	0698-0083	8		RESISTOR 1.96K 1% .125W F TC=0+-100	24546	C4-1/8-T0-1961-F
A1A3R87	0757-0464	5	2	RESISTOR 90.9K 1% .125W F TC=0+-100	24546	C4-1/8-T0-9092-F
A1A3R88	0698-8827	4		RESISTOR 1M 1% .125W F TC=0+-100	28480	0698-8827
A1A3R89	0698-7284	5		RESISTOR 100K 1% .05W F TC=0+-100	24546	C3-1/8-T0-1003-F
A1A3R90	0698-7260	7		RESISTOR 10K 1% .05W F TC=0+-100	24546	C3-1/8-T0-1002-F
A1A3R91	0757-0438	3		RESISTOR 5.11K 1% .125W F TC=0+-100	24546	C4-1/8-T0-5111-F
A1A3R92	0698-7206	1	1	RESISTOR 56.2 1% .05W F TC=0+-100	24546	C3-1/8-T0-56R2-F
A1A3TP1	1251-0600	0	41	CONNECTOR-SGL CONT PIN 1.14-MM-BSC-SZ SQ	28480	1251-0600
A1A3TP2	1251-0600	0		CONNECTOR-SGL CONT PIN 1.14-MM-BSC-SZ SQ	28480	1251-0600
A1A3TP3	1251-0600	0		CONNECTOR-SGL CONT PIN 1.14-MM-BSC-SZ SQ	28480	1251-0600
A1A3TP4	1251-0600	0		CONNECTOR-SGL CONT PIN 1.14-MM-BSC-SZ SQ	28480	1251-0600
A1A3TP5	1251-0600	0		CONNECTOR-SGL CONT PIN 1.14-MM-BSC-SZ SQ	28480	1251-0600
A1A3U1	1826-0059	2	5	IC OP AMP GP TO-99 PKG	01295	LM201AL
A1A3U2	1826-0600	9	1	IC OP AMP LOW-BIAS-H-IMPD QUAD 14-DIP-P	01295	TL074ACN
A1A3U3	1826-0520	2	2	IC OP AMP LOW-BIAS-H-IMPD 8-DIP-P PKG	01295	TL071BCP
A1A3U4	1826-0501	9	1	IC MULTIPLXR 2-CHAN-ANLG TRIPLE 16-DIP-P	04713	MC14053BCP
A1A3U5	1826-0413	2	4	IC OP AMP LOW-BIAS-H-IMPD TO-99 PKG	34371	HA2-2605-5
A1A3U6	1826-0413	2		IC OP AMP LOW-BIAS-H-IMPD TO-99 PKG	34371	HA2-2605-5
A1A3U7	1820-0125	1	1	IC COMPARATOR GP DUAL TO-100 PKG	07263	711HC
A1A3U8	1826-0582	6	8	IC SWITCH ANLG QUAD 16-DIP-C PKG	27014	LF13201D
A1A3U9	1826-0413	2		IC OP AMP LOW-BIAS-H-IMPD TO-99 PKG	34371	HA2-2605-5
A1A3U10	1820-1445	0		IC LCH TTL LS 4-BIT	01295	SN74LS375N
A1A3U11	1820-1445	0		IC LCH TTL LS 4-BIT	01295	SN74LS375N
A1A3U12	1826-0520	2		IC OP AMP LOW-BIAS-H-IMPD 8-DIP-P PKG	01295	TL071BCP
A1A3U13	1826-0413	2		IC OP AMP LOW-BIAS-H-IMPD TO-99 PKG	34371	HA2-2605-5
A1A3U14	1826-0471	2		IC OP AMP LOW-DRIFT TO-99 PKG	28480	1826-0471
A1A3U15	1826-0059	2		IC OP AMP GP TO-99 PKG	01295	LM201AL
A1A3VR1	1902-0951	5		DIODE-ZNR 5.1V 5% DO-35 PD=.4W TC=+.035%	28480	1902-0951
A1A3VR2	1902-0962	8	2	DIODE-ZNR 15V 5% DO-35 PD=.4W TC=+.087%	28480	1902-0962
A1A3VR3	1902-0961	7	1	DIODE-ZNR 13V 5% DO-35 PD=.4W TC=+.082%	28480	1902-0961
A1A3VR4	1902-0948	0	3	DIODE-ZNR 3.9V 5% DO-35 PD=.4W TC=-.012%	28480	1902-0948
A1A3VR5	1902-0948	0		DIODE-ZNR 3.9V 5% DO-35 PD=.4W TC=-.012%	28480	1902-0948
A1A3VR6	1902-0954	8	1	DIODE-ZNR 6.8V 5% DO-35 PD=.4W TC=+.057%	28480	1902-0954
A1A3VR7	1902-0951	5		DIODE-ZNR 5.1V 5% DO-35 PD=.4W TC=+.035%	28480	1902-0951
A1A4	08673-60034	1	1	PULSE DRIVER BOARD ASSEMBLY	28480	08673-60034
A1A4C1	0180-0116	1	4	CAPACITOR-FXD 6.8UF+-10% 35VDC TA	56289	150D685X9035B2
A1A4C2	0160-3878	6		CAPACITOR-FXD 1000PF +-20% 100VDC CER	28480	0160-3878
A1A4C3	0170-0040	9	1	CAPACITOR-FXD .047UF +-10% 200VDC POLYE	56289	292P47392
A1A4C4	0160-0576	5		CAPACITOR-FXD .1UF +-20% 50VDC CER	28480	0160-0576
A1A4C5	0180-0229	7	2	CAPACITOR-FXD 33UF+-10% 10VDC TA	56289	150D336X9010B2
A1A4C6	0160-3879	7		CAPACITOR-FXD .01UF +-20% 100VDC CER	28480	0160-3879
A1A4C7	0160-0174	9		CAPACITOR-FXD .47UF +80-20% 25VDC CER	28480	0160-0174
A1A4C8	0180-1746	5	5	CAPACITOR-FXD 15UF+-10% 20VDC TA	56289	150D156X9020B2
A1A4C9	0160-0576	5		CAPACITOR-FXD .1UF +-20% 50VDC CER	28480	0160-0576
A1A4C10	0160-0174	9		CAPACITOR-FXD .47UF +80-20% 25VDC CER	28480	0160-0174
A1A4C11	0160-0576	5		CAPACITOR-FXD .1UF +-20% 50VDC CER	28480	0160-0576
A1A4C12	0160-0576	5		CAPACITOR-FXD .1UF +-20% 50VDC CER	28480	0160-0576
A1A4C13	0160-0576	5		CAPACITOR-FXD .1UF +-20% 50VDC CER	28480	0160-0576
A1A4C14	0160-0576	5		CAPACITOR-FXD .1UF +-20% 50VDC CER	28480	0160-0576
A1A4C15	0160-0576	5		CAPACITOR-FXD .1UF +-20% 50VDC CER	28480	0160-0576
A1A4C16	0160-0576	5		CAPACITOR-FXD .1UF +-20% 50VDC CER	28480	0160-0576
A1A4C17	0160-2266	4	1	CAPACITOR-FXD 24PF +-5% 500VDC CER 0+-30	28480	0160-2266
A1A4C18	0160-3874	2	1	CAPACITOR-FXD 10PF +-.5PF 200VDC CER	28480	0160-3874
A1A4C19	0160-4350	1	2	CAPACITOR-FXD 68PF +-5% 200VDC CER 0+-30	28480	0160-4350
A1A4C20	0160-4387	4	9	CAPACITOR-FXD 47PF +-5% 200VDC CER 0+-30	28480	0160-4387
A1A4C21	0160-4389	6	2	CAPACITOR-FXD 100PF +-5PF 200VDC CER	28480	0160-4389
A1A4C22	0160-0576	5		CAPACITOR-FXD .1UF +-20% 50VDC CER	28480	0160-0576
A1A4C23	0160-0134	1	1	CAPACITOR-FXD 220PF +-5% 300VDC MICA	28480	0160-0134
A1A4C24	0160-4350	1		CAPACITOR-FXD 68PF +-5% 200VDC CER 0+-30	28480	0160-4350
A1A4C25	0160-4520	7	1	CAPACITOR-FXD 11PF +-5% 200VDC CER 0+-30	28480	0160-4520
A1A4C26	0160-0174	9		CAPACITOR-FXD .47UF +80-20% 25VDC CER	28480	0160-0174
A1A4C27	0160-0576	5		CAPACITOR-FXD .1UF +-20% 50VDC CER	28480	0160-0576
A1A4C28	0160-4389	6		CAPACITOR-FXD 100PF +-5PF 200VDC CER	28480	0160-4389
A1A4C29	0160-2261	9	1	CAPACITOR-FXD 15PF +-5% 500VDC CER 0+-30	28480	0160-2261
A1A4C30	0160-4387	4		CAPACITOR-FXD 47PF +-5% 200VDC CER 0+-30	28480	0160-4387

See introduction to this section for ordering information
*Indicates factory selected value

Table 6-3. Replaceable Parts

Reference Designation	HP Part Number	C D	Qty	Description	Mfr Code	Mfr Part Number
A1A4C31	0160-3875	3	4	CAPACITOR-FXD 22PF +-5% 200VDC CER 0+-30	28480	0160-3875
A1A4C32	0160-4103	2	1	CAPACITOR-FXD 220PF +-5% 100VDC CER	72982	8121-M100-COG-221J
A1A4C33	0160-2257	3		CAPACITOR-FXD 10PF +-5% 500VDC CER 0+-60	28480	0160-2257
A1A4C34	0160-2259	5	1	CAPACITOR-FXD 12PF +-5% 500VDC CER 0+-30	28480	0160-2259
A1A4C35	0160-3537	4	1	CAPACITOR-FXD 680PF +-5% 100VDC MICA	28480	0160-3537
A1A4C36	0160-3875	3		CAPACITOR-FXD 22PF +-5% 200VDC CER 0+-30	28480	0160-3875
A1A4C37	0160-2220	0	1	CAPACITOR-FXD 1200PF +-5% 300VDC MICA	28480	0160-2220
A1A4C38	0160-4031	5		CAPACITOR-FXD 330PF +-5% 100VDC CER	28480	0160-4031
A1A4C39	0180-0116	1		CAPACITOR-FXD 6.8UF+-10% 35VDC TA	56289	150D685X9035B2
A1A4C40	0160-0174	9		CAPACITOR-FXD .47UF +80-20% 25VDC CER	28480	0160-0174
A1A4C41	0180-0116	1		CAPACITOR-FXD 6.8UF+-10% 35VDC TA	56289	150D685X9035B2
A1A4C42	0160-0573	2		CAPACITOR-FXD 4700PF +-20% 100VDC CER	28480	0160-0573
A1A4C43	0160-2257	3		CAPACITOR-FXD 10PF +-5% 500VDC CER 0+-60	28480	0160-2257
A1A4C44	0180-0374	3		CAPACITOR-FXD 10UF+-10% 20VDC TA	56289	150D106X9020B2
A1A4CR1	1901-0539	3		DIODE-SM SIG SCHOTTKY	28480	1901-0539
A1A4CR2	1901-0539	3		DIODE-SM SIG SCHOTTKY	28480	1901-0539
A1A4CR3	1901-0539	3		DIODE-SM SIG SCHOTTKY	28480	1901-0539
A1A4CR4	1901-0539	3		DIODE-SM SIG SCHOTTKY	28480	1901-0539
A1A4CR5	1901-0539	3		DIODE-SM SIG SCHOTTKY	28480	1901-0539
A1A4CR6	1901-0539	3		DIODE-SM SIG SCHOTTKY	28480	1901-0539
A1A4CR7	1901-0539	3		DIODE-SM SIG SCHOTTKY	28480	1901-0539
A1A4CR8	1901-0539	3		DIODE-SM SIG SCHOTTKY	28480	1901-0539
A1A4CR9	1901-0539	3		DIODE-SM SIG SCHOTTKY	28480	1901-0539
A1A4CR10	1901-0539	3		DIODE-SM SIG SCHOTTKY	28480	1901-0539
A1A4CR11	1901-0539	3		DIODE-SM SIG SCHOTTKY	28480	1901-0539
A1A4CR12	1901-0539	3		DIODE-SM SIG SCHOTTKY	28480	1901-0539
A1A4CR13	1901-0539	3		DIODE-SM SIG SCHOTTKY	28480	1901-0539
A1A4CR14	1901-0539	3		DIODE-SM SIG SCHOTTKY	28480	1901-0539
A1A4CR15	1901-0179	7	1	DIODE-SWITCHING 15V 50MA 750PS DO-7	28480	1901-0179
A1A4J1	1250-1377	8	2	CONNECTOR-RF SMB M PC 50-OHM	28480	1250-1377
A1A4J2	1250-0836	2	1	CONNECTOR-RF SMC M PC 50-OHM	28480	1250-0836
A1A4J3	1250-1377	8		CONNECTOR-RF SMB M PC 50-OHM	28480	1250-1377
A1A4L1	9100-1618	1	2	INDUCTOR RF-CH-MLD 5.6UH 10%	28480	9100-1618
A1A4L2	9100-1618	1		INDUCTOR RF-CH-MLD 5.6UH 10%	28480	9100-1618
A1A4L3	9140-0142	8	2	INDUCTOR RF-CH-MLD 2.2UH 10% .105DX.26LG	28480	9140-0142
A1A4L4	9140-0158	6	1	INDUCTOR RF-CH-MLD 1UH 10% .105DX.26LG	28480	9140-0158
A1A4L5	9140-0142	8		INDUCTOR RF-CH-MLD 2.2UH 10% .105DX.26LG	28480	9140-0142
A1A4L6	9100-2261	2	1	INDUCTOR RF-CH-MLD 2.7UH 10% .105DX.26LG	28480	9100-2261
A1A4MP1	1480-0073	6		PIN-ROLL .062-IN-DIA .25-IN-LG BE-CU	28480	1480-0073
A1A4MP2	4040-0748	3		EXTR-PC BD BLK POLYC .062-BD-THKNS	28480	4040-0748
A1A4MP3	4040-0752	9	1	EXTR-PC BD YEL POLYC .062-BD-THKNS	28480	4040-0752
A1A4Q1	1853-0405	9		TRANSISTOR PNP SI PD=300MW FT=850MHZ	04713	2N4209
A1A4Q2	1853-0405	9		TRANSISTOR PNP SI PD=300MW FT=850MHZ	04713	2N4209
A1A4Q3	1853-0405	9		TRANSISTOR PNP SI PD=300MW FT=850MHZ	04713	2N4209
A1A4Q4	1853-0405	9		TRANSISTOR PNP SI PD=300MW FT=850MHZ	04713	2N4209
A1A4Q5	1853-0405	9		TRANSISTOR PNP SI PD=300MW FT=850MHZ	04713	2N4209
A1A4Q6	1853-0405	9		TRANSISTOR PNP SI PD=300MW FT=850MHZ	04713	2N4209
A1A4Q7	1854-0810	2		TRANSISTOR NPN SI PD=625MW FT=200MHZ	28480	1854-0810
A1A4Q8	1853-0405	9		TRANSISTOR PNP SI PD=300MW FT=850MHZ	04713	2N4209
A1A4Q9	1854-0809	9	5	TRANSISTOR NPN 2N2369A SI TO-18 PD=360MW	28480	1854-0809
A1A4Q10	1854-0809	9		TRANSISTOR NPN 2N2369A SI TO-18 PD=360MW	28480	1854-0809
A1A4Q11	1853-0405	9		TRANSISTOR PNP SI PD=300MW FT=850MHZ	04713	2N4209
A1A4R1	0698-3430	5		RESISTOR 21.5 1% .125W F TC=0+-100	03888	PME55-1/8-T0-21R5-F
A1A4R2	0698-3429	2	1	RESISTOR 19.6 1% .125W F TC=0+-100	03888	PME55-1/8-T0-19R6-F
A1A4R3	0698-8812	7		RESISTOR 1 1% .125W F TC=0+-100	28480	0698-8812
A1A4R4	0757-1000	7	1	RESISTOR 51.1 1% .5W F TC=0+-100	28480	0757-1000
A1A4R5	0757-0401	0		RESISTOR 100 1% .125W F TC=0+-100	24546	C4-1/8-T0-101-F
A1A4R6	0698-8812	7		RESISTOR 1 1% .125W F TC=0+-100	28480	0698-8812
A1A4R7	0698-0083	8		RESISTOR 1.96K 1% .125W F TC=0+-100	24546	C4-1/8-T0-1961-F
A1A4R8	0757-0274	5		RESISTOR 1.21K 1% .125W F TC=0+-100	24546	C4-1/8-T0-1211-F
A1A4R9	0698-0083	8		RESISTOR 1.96K 1% .125W F TC=0+-100	24546	C4-1/8-T0-1961-F
A1A4R10	0698-0083	8		RESISTOR 1.96K 1% .125W F TC=0+-100	24546	C4-1/8-T0-1961-F
A1A4R11	0698-0083	8		RESISTOR 1.96K 1% .125W F TC=0+-100	24546	C4-1/8-T0-1961-F
A1A4R12	0757-0401	0		RESISTOR 100 1% .125W F TC=0+-100	24546	C4-1/8-T0-101-F
A1A4R13	0757-0416	7		RESISTOR 511 1% .125W F TC=0+-100	24546	C4-1/8-T0-511R-F
A1A4R14	0757-0280	3		RESISTOR 1K 1% .125W F TC=0+-100	24546	C4-1/8-T0-1001-F
A1A4R15	0757-0280	3		RESISTOR 1K 1% .125W F TC=0+-100	24546	C4-1/8-T0-1001-F
A1A4R16	0698-3430	5		RESISTOR 21.5 1% .125W F TC=0+-100	03888	PME55-1/8-T0-21R5-F
A1A4R17	0757-0280	3		RESISTOR 1K 1% .125W F TC=0+-100	24546	C4-1/8-T0-1001-F
A1A4R18	0757-0280	3		RESISTOR 1K 1% .125W F TC=0+-100	24546	C4-1/8-T0-1001-F
A1A4R19	0757-0416	7		RESISTOR 511 1% .125W F TC=0+-100	24546	C4-1/8-T0-511R-F
A1A4R20	0698-3437	2	1	RESISTOR 133 1% .125W F TC=0+-100	24546	C4-1/8-T0-133R-F

See introduction to this section for ordering information
*Indicates factory selected value

Table 6-3. Replaceable Parts

Reference Designation	HP Part Number	C D	Qty	Description	Mfr Code	Mfr Part Number
A1A4R21	0757-0442	9		RESISTOR 10K 1% .125W F TC=0+-100	24546	C4-1/8-T0-1002-F
A1A4R22	0757-0280	3		RESISTOR 1K 1% .125W F TC=0+-100	24546	C4-1/8-T0-1001-F
A1A4R23	0757-0416	7		RESISTOR 511 1% .125W F TC=0+-100	24546	C4-1/8-T0-511R-F
A1A4R24	2100-3749	6	2	RESISTOR-TRMR 5K 10% C SIDE-ADJ 17-TRN	28480	2100-3749
A1A4R25	0757-0416	7		RESISTOR 511 1% .125W F TC=0+-100	24546	C4-1/8-T0-511R-F
A1A4R26	0757-0280	3		RESISTOR 1K 1% .125W F TC=0+-100	24546	C4-1/8-T0-1001-F
A1A4R27	0757-0280	3		RESISTOR 1K 1% .125W F TC=0+-100	24546	C4-1/8-T0-1001-F
A1A4R28	0757-0274	5		RESISTOR 1.21K 1% .125W F TC=0+-100	24546	C4-1/8-T0-1211-F
A1A4R29	2100-2413	9	1	RESISTOR-TRMR 200 10% C SIDE-ADJ 1-TRN	30983	ET50X201
A1A4R30	0698-3444	1	2	RESISTOR 316 1% .125W F TC=0+-100	24546	C4-1/8-T0-316R-F
A1A4R31	0757-0420	3	1	RESISTOR 750 1% .125W F TC=0+-100	24546	C4-1/8-T0-751-F
A1A4R32	0757-0278	9	1	RESISTOR 1.78K 1% .125W F TC=0+-100	24546	C4-1/8-T0-1781-F
A1A4R33	2100-3749	6		RESISTOR-TRMR 5K 10% C SIDE-ADJ 17-TRN	28480	2100-3749
A1A4R34	0757-0419	0		RESISTOR 681 1% .125W F TC=0+-100	24546	C4-1/8-T0-681R-F
A1A4R35	2100-2574	3	4	RESISTOR-TRMR 500 10% C SIDE-ADJ 1-TRN	30983	ET50X501
A1A4R36	0757-0294	9	1	RESISTOR 17.8 1% .125W F TC=0+-100	19701	MF4C1/8-T0-17R8-F
A1A4R37	0698-3150	6	3	RESISTOR 2.37K 1% .125W F TC=0+-100	24546	C4-1/8-T0-2371-F
A1A4R38	0698-0082	7	1	RESISTOR 464 1% .125W F TC=0+-100	24546	C4-1/8-T0-4640-F
A1A4R39	0698-3152	8	3	RESISTOR 3.48K 1% .125W F TC=0+-100	24546	C4-1/8-T0-3481-F
A1A4R40	0698-0085	0	4	RESISTOR 2.61K 1% .125W F TC=0+-100	24546	C4-1/8-T0-2611-F
A1A4R41	0698-3438	3	3	RESISTOR 147 1% .125W F TC=0+-100	24546	C4-1/8-T0-147R-F
A1A4R42	0698-3623	8	1	RESISTOR 130 5% 2W MO TC=0+-200	28480	0698-3623
A1A4R43	0698-8817	2	2	RESISTOR 2.61 1% .125W F TC=0+-100	28480	0698-8817
A1A4R44	0764-0013	5	1	RESISTOR 56 5% 2W MO TC=0+-200	28480	0764-0013
A1A4R45	0698-3444	1		RESISTOR 316 1% .125W F TC=0+-100	24546	C4-1/8-T0-316R-F
A1A4R46	2100-3759	8	1	RESISTOR-TRMR 2K 10% C SIDE-ADJ 17-TRN	28480	2100-3759
A1A4R47	0757-0416	7		RESISTOR 511 1% .125W F TC=0+-100	24546	C4-1/8-T0-511R-F
A1A4R48	0757-0419	0		RESISTOR 681 1% .125W F TC=0+-100	24546	C4-1/8-T0-681R-F
A1A4R49	0757-0438	3		RESISTOR 5.11K 1% .125W F TC=0+-100	24546	C4-1/8-T0-5111-F
A1A4R50	0698-8812	7		RESISTOR 1 1% .125W F TC=0+-100	28480	0698-8812
A1A4R51	0698-3450	9	4	RESISTOR 42.2K 1% .125W F TC=0+-100	24546	C4-1/8-T0-4222-F
A1A4R52	0757-0428	1		RESISTOR 1.62K 1% .125W F TC=0+-100	24546	C4-1/8-T0-1621-F
A1A4R53	0698-3440	7	1	RESISTOR 196 1% .125W F TC=0+-100	24546	C4-1/8-T0-196R-F
A1A4R54	0757-0438	3		RESISTOR 5.11K 1% .125W F TC=0+-100	24546	C4-1/8-T0-5111-F
A1A4R55	0698-3160	8		RESISTOR 31.6K 1% .125W F TC=0+-100	24546	C4-1/8-T0-3162-F
A1A4R56	0757-0416	7		RESISTOR 511 1% .125W F TC=0+-100	24546	C4-1/8-T0-511R-F
A1A4R57	0757-1094	9	3	RESISTOR 1.47K 1% .125W F TC=0+-100	24546	C4-1/8-T0-1471-F
A1A4R58	0757-0198	2	1	RESISTOR 100 1% .5W F TC=0+-100	28480	0757-0198
A1A4R59	0757-0280	3		RESISTOR 1K 1% .125W F TC=0+-100	24546	C4-1/8-T0-1001-F
A1A4TP1	1251-0600	0		CONNECTOR-SGL CONT PIN 1.14-MM-BSC-SZ SQ	28480	1251-0600
A1A4TP2	1251-0600	0		CONNECTOR-SGL CONT PIN 1.14-MM-BSC-SZ SQ	28480	1251-0600
A1A4TP3	1251-0600	0		CONNECTOR-SGL CONT PIN 1.14-MM-BSC-SZ SQ	28480	1251-0600
A1A4TP4	1251-0600	0		CONNECTOR-SGL CONT PIN 1.14-MM-BSC-SZ SQ	28480	1251-0600
A1A4TP5	1251-0600	0		CONNECTOR-SGL CONT PIN 1.14-MM-BSC-SZ SQ	28480	1251-0600
A1A4TP6	1251-0600	0		CONNECTOR-SGL CONT PIN 1.14-MM-BSC-SZ SQ	28480	1251-0600
A1A4TP7	1251-0600	0		CONNECTOR-SGL CONT PIN 1.14-MM-BSC-SZ SQ	28480	1251-0600
A1A4TP8	1251-0600	0		CONNECTOR-SGL CONT PIN 1.14-MM-BSC-SZ SQ	28480	1251-0600
A1A4TP9	1251-0600	0		CONNECTOR-SGL CONT PIN 1.14-MM-BSC-SZ SQ	28480	1251-0600
A1A4TP10	1251-0600	0		CONNECTOR-SGL CONT PIN 1.14-MM-BSC-SZ SQ	28480	1251-0600
A1A4U1	1820-0694	9	1	IC GATE TTL S EXCL-OR QUAD 2-INP	01295	SN74S86N
A1A4U2	1820-1423	4	1	IC MV TTL LS MONOSTBL RETRIG DUAL	01295	SN74LS123N
A1A4U3	1820-1367	5	1	IC GATE TTL S AND QUAD 2-INP	01295	SN74S08N
A1A4U4	1820-0684	7	1	IC INV TTL S HEX 1-INP	01295	SN74S05N
A1A4U5	1820-1797	5	1	IC DRVR TTL 2-INP	27014	DH0035CG
A1A4U6	1820-1322	2	1	IC GATE TTL S NOR QUAD 2-INP	01295	SN74S02N
A1A4U7	1820-0681	4	1	IC GATE TTL S NAND QUAD 2-INP	01295	SN74S00N
A1A4U8	1820-1445	0		IC LCH TTL LS 4-BIT	01295	SN74LS375N
A1A4VR1	1902-0533	9	1	DIODE-ZNR 4.99V 2% DO-15 PD=1W TC=-.012%	28480	1902-0533
A1A4VR2	1902-0952	6	1	DIODE-ZNR 5.6V 5% DO-35 PD=.4W TC=+.046%	28480	1902-0952
A1A4VR3	1902-0948	0		DIODE-ZNR 3.9V 5% DO-35 PD=.4W TC=-.012%	28480	1902-0948
A1A4VR4	1902-0551	1	1	DIODE-ZNR 6.2V 5% PD=1W IR=10UA	28480	1902-0551
A1A5	08673-60028	3	1	DAC ENABLE BOARD ASSEMBLY	28480	08673-60028
A1A5C1	0160-4527	4	1	CAPACITOR-FXD 56PF +-5% 200VDC CER 0+-30	28480	0160-4527
A1A5C2	0160-2055	9		CAPACITOR-FXD .01UF +80-20% 100VDC CER	28480	0160-2055
A1A5C3	0160-0576	5		CAPACITOR-FXD .1UF +-20% 50VDC CER	28480	0160-0576
A1A5C4	0180-0116	1		CAPACITOR-FXD 6.8UF+-10% 35VDC TA	56289	150D685X9035B2
A1A5C5	0160-0576	5		CAPACITOR-FXD .1UF +-20% 50VDC CER	28480	0160-0576
A1A5C6	0160-3878	6		CAPACITOR-FXD 1000PF +-20% 100VDC CER	28480	0160-3878
A1A5C7	0160-0576	5		CAPACITOR-FXD .1UF +-20% 50VDC CER	28480	0160-0576
A1A5C8	0180-0197	8		CAPACITOR-FXD 2.2UF+-10% 20VDC TA	56289	150D225X9020A2
A1A5C9	0160-0576	5		CAPACITOR-FXD .1UF +-20% 50VDC CER	28480	0160-0576
A1A5C10	0180-0291	3		CAPACITOR-FXD 1UF+-10% 35VDC TA	56289	150D105X9035A2
A1A5C11	0160-0576	5		CAPACITOR-FXD .1UF +-20% 50VDC CER	28480	0160-0576
A1A5C12	0160-0576	5		CAPACITOR-FXD .1UF +-20% 50VDC CER	28480	0160-0576
A1A5C13	0160-0576	5		CAPACITOR-FXD .1UF +-20% 50VDC CER	28480	0160-0576
A1A5C14	0160-0576	5		CAPACITOR-FXD .1UF +-20% 50VDC CER	28480	0160-0576
A1A5C15	0160-0576	5		CAPACITOR-FXD .1UF +-20% 50VDC CER	28480	0160-0576

See introduction to this section for ordering information
*Indicates factory selected value

Table 6-3. Replaceable Parts

Reference Designation	HP Part Number	C D	Qty	Description	Mfr Code	Mfr Part Number
A1A5C16				NOT ASSIGNED		
A1A5C17	0160-3878	6		CAPACITOR-FXD 1000PF +-20% 100VDC CER	28480	0160-3878
A1A5C18	0160-3878	6		CAPACITOR-FXD 1000PF +-20% 100VDC CER	28480	0160-3878
A1A5C19	0160-3877	5		CAPACITOR-FXD 100PF +-20% 200VDC CER	28480	0160-3877
A1A5C20	0160-3872	0	1	CAPACITOR-FXD 2.2PF +-.25PF 200VDC CER	28480	0160-3872
A1A5C21	0180-0291	3		CAPACITOR-FXD 1UF+-10% 35VDC TA	56289	150D105X9035A2
A1A5C22	0180-0291	3		CAPACITOR-FXD 1UF+-10% 35VDC TA	56289	150D105X9035A2
A1A5C23	0160-0570	9		CAPACITOR-FXD 220PF +-20% 100VDC CER	20932	5024EM100RD221M
A1A5C24	0160-0570	9		CAPACITOR-FXD 220PF +-20% 100VDC CER	20932	5024EM100RD221M
A1A5C25	0160-0576	5		CAPACITOR-FXD .1UF +-20% 50VDC CER	28480	0160-0576
A1A5C26	0160-3878	6		CAPACITOR-FXD 1000PF +-20% 100VDC CER	28480	0160-3878
A1A5CR1	1901-0050	3		DIODE-SWITCHING 80V 200MA 2NS DO-35	28480	1901-0050
A1A5CR2	1901-0050	3		DIODE-SWITCHING 80V 200MA 2NS DO-35	28480	1901-0050
A1A5CR3	1901-0050	3		DIODE-SWITCHING 80V 200MA 2NS DO-35	28480	1901-0050
A1A5MP1	1480-0073	6		PIN-ROLL .062-IN-DIA .25-IN-LG BE-CU	28480	1480-0073
A1A5MP2	4040-0748	3		EXTR-PC BD BLK POLYC .062-BD-THKNS	28480	4040-0748
A1A5MP3	4040-0753	0	1	EXTR-PC BD GRN POLYC .062-BD-THKNS	28480	4040-0753
A1A5Q1	1853-0459	3		TRANSISTOR PNP SI PD=625MW FT=200MHZ	28480	1853-0459
A1A5Q2	1853-0459	3		TRANSISTOR PNP SI PD=625MW FT=200MHZ	28480	1853-0459
A1A5Q3	1854-0810	2		TRANSISTOR NPN SI PD=625MW FT=200MHZ	28480	1854-0810
A1A5Q4	1854-0810	2		TRANSISTOR NPN SI PD=625MW FT=200MHZ	28480	1854-0810
A1A5Q5	1853-0459	3		TRANSISTOR PNP SI PD=625MW FT=200MHZ	28480	1853-0459
A1A5Q6	1853-0459	3		TRANSISTOR PNP SI PD=625MW FT=200MHZ	28480	1853-0459
A1A5Q7	1855-0414	4		TRANSISTOR J-FET 2N4393 N-CHAN D-MODE	04713	2N4393
A1A5Q8	1855-0420	2	2	TRANSISTOR J-FET 2N4391 N-CHAN D-MODE	01295	2N4391
A1A5Q9	1855-0420	2		TRANSISTOR J-FET 2N4391 N-CHAN D-MODE	01295	2N4391
A1A5Q10	1854-0809	9		TRANSISTOR NPN 2N2369A SI TO-18 PD=360MW	28480	1854-0809
A1A5Q11	1854-0637	1	2	TRANSISTOR NPN 2N2219A SI TO-5 PD=800MW	01295	2N2219A
A1A5Q12	1853-0314	9	3	TRANSISTOR PNP 2N2905A SI TO-39 PD=600MW	04713	2N2905A
A1A5Q13	1853-0459	3		TRANSISTOR PNP SI PD=625MW FT=200MHZ	28480	1853-0459
A1A5Q14	1854-0810	2		TRANSISTOR NPN SI PD=625MW FT=200MHZ	28480	1854-0810
A1A5R1	0698-3403	2	2	RESISTOR 348 1% .5W F TC=0+-100	28480	0698-3403
A1A5R2	0757-0444	1	4	RESISTOR 12.1K 1% .125W F TC=0+-100	24546	C4-1/8-T0-1212-F
A1A5R3	0698-3403	2		RESISTOR 348 1% .5W F TC=0+-100	28480	0698-3403
A1A5R4	0757-0441	8		RESISTOR 8.25K 1% .125W F TC=0+-100	24546	C4-1/8-T0-8251-F
A1A5R5	0757-0280	3		RESISTOR 1K 1% .125W F TC=0+-100	24546	C4-1/8-T0-1001-F
A1A5R6	0698-3153	9	3	RESISTOR 3.83K 1% .125W F TC=0+-100	24546	C4-1/8-T0-3831-F
A1A5R7	0757-0797	7	2	RESISTOR 90.9 1% .5W F TC=0+-100	28480	0757-0797
A1A5R8	0698-3450	9		RESISTOR 42.2K 1% .125W F TC=0+-100	24546	C4-1/8-T0-4222-F
A1A5R9	2100-3103	6	11	RESISTOR-TRMR 10K 10% C SIDE-ADJ 17-TRN	02111	43P103
A1A5R10	0698-0084	9	2	RESISTOR 2.15K 1% .125W F TC=0+-100	24546	C4-1/8-T0-2151-F
A1A5R11	0757-1094	9		RESISTOR 1.47K 1% .125W F TC=0+-100	24546	C4-1/8-T0-1471-F
A1A5R12	0811-3202	1	4	RESISTOR 30.615K .1% .05W PWW TC=0+-10	14140	1409-1/40-30615R-B
A1A5R13	0698-0083	8		RESISTOR 1.96K 1% .125W F TC=0+-100	24546	C4-1/8-T0-1961-F
A1A5R14	0698-0083	8		RESISTOR 1.96K 1% .125W F TC=0+-100	24546	C4-1/8-T0-1961-F
A1A5R15	0811-3377	1	1	RESISTOR 5.62K .1% .125W PWW TC=0+-10	28480	0811-3377
A1A5R16	0698-3156	2	7	RESISTOR 14.7K 1% .125W F TC=0+-100	24546	C4-1/8-T0-1472-F
A1A5R17	0698-3156	2		RESISTOR 14.7K 1% .125W F TC=0+-100	24546	C4-1/8-T0-1472-F
A1A5R18	0698-0083	8		RESISTOR 1.96K 1% .125W F TC=0+-100	24546	C4-1/8-T0-1961-F
A1A5R19	0698-0083	8		RESISTOR 1.96K 1% .125W F TC=0+-100	24546	C4-1/8-T0-1961-F
A1A5R20	0698-0083	8		RESISTOR 1.96K 1% .125W F TC=0+-100	24546	C4-1/8-T0-1961-F
A1A5R21	0698-0083	8		RESISTOR 1.96K 1% .125W F TC=0+-100	24546	C4-1/8-T0-1961-F
A1A5R22	0698-0083	8		RESISTOR 1.96K 1% .125W F TC=0+-100	24546	C4-1/8-T0-1961-F
A1A5R23	0698-0083	8		RESISTOR 1.96K 1% .125W F TC=0+-100	24546	C4-1/8-T0-1961-F
A1A5R24	0757-0442	9		RESISTOR 10K 1% .125W F TC=0+-100	24546	C4-1/8-T0-1002-F
A1A5R25	0757-0442	9		RESISTOR 10K 1% .125W F TC=0+-100	24546	C4-1/8-T0-1002-F
A1A5R26	0698-0083	8		RESISTOR 1.96K 1% .125W F TC=0+-100	24546	C4-1/8-T0-1961-F
A1A5R27	0698-3154	0	2	RESISTOR 4.22K 1% .125W F TC=0+-100	24546	C4-1/8-T0-4221-F
A1A5R28	0698-7284	5		RESISTOR 100K 1% .05W F TC=0+-100	24546	C3-1/8-T0-1003-F
A1A5R29	0757-0465	6		RESISTOR 100K 1% .125W F TC=0+-100	24546	C4-1/8-T0-1003-F
A1A5R30	0757-0280	3		RESISTOR 1K 1% .125W F TC=0+-100	24546	C4-1/8-T0-1001-F
A1A5R31	0811-3374	8	2	RESISTOR 23.7K .1% .05W PWW TC=0+-10	28480	0811-3374
A1A5R32	0811-3374	8		RESISTOR 23.7K .1% .05W PWW TC=0+-10	28480	0811-3374
A1A5R33	0698-7263	0	2	RESISTOR 13.3K 1% .05W F TC=0+-100	24546	C3-1/8-T0-1332-F
A1A5R34	0698-7188	8		RESISTOR 10 1% .05W F TC=0+-100	24546	C3-1/8-T0-10R-F
A1A5R35	0757-0346	2		RESISTOR 10 1% .125W F TC=0+-100	24546	C4-1/8-T0-10R0-F
A1A5R36	0811-3202	1		RESISTOR 30.615K .1% .05W PWW TC=0+-10	14140	1409-1/40-30615R-B
A1A5R37	0757-0444	1		RESISTOR 12.1K 1% .125W F TC=0+-100	24546	C4-1/8-T0-1212-F
A1A5R38	0698-3136	8	4	RESISTOR 17.8K 1% .125W F TC=0+-100	24546	C4-1/8-T0-1782-F
A1A5R39	0757-0444	1		RESISTOR 12.1K 1% .125W F TC=0+-100	24546	C4-1/8-T0-1212-F
A1A5R40	0757-0459	8	1	RESISTOR 56.2K 1% .125W F TC=0+-100	24546	C4-1/8-T0-5622-F
A1A5R41	0757-0440	7	1	RESISTOR 7.5K 1% .125W F TC=0+-100	24546	C4-1/8-T0-7501-F
A1A5R42	0698-7196	8	2	RESISTOR 21.5 1% .05W F TC=0+-100	24546	C3-1/8-T0-21R5-F
A1A5R43	0698-7196	8		RESISTOR 21.5 1% .05W F TC=0+-100	24546	C3-1/8-T0-21R5-F
A1A5R44	0757-0199	3	2	RESISTOR 21.5K 1% .125W F TC=0+-100	24546	C4-1/8-T0-2152-F
A1A5R45	0698-3450	9		RESISTOR 42.2K 1% .125W F TC=0+-100	24546	C4-1/8-T0-4222-F

See introduction to this section for ordering information
*Indicates factory selected value

Table 6-3. Replaceable Parts

Reference Designation	HP Part Number	C D	Qty	Description	Mfr Code	Mfr Part Number
A1A5R46	0698-7212	9		RESISTOR 100 1% .05W F TC=0+-100	24546	C3-1/8-T0-100R-F
A1A5R47	2100-3103	6		RESISTOR-TRMR 10K 10% C SIDE-ADJ 17-TRN	02111	43P103
A1A5R48	0698-8061	8	1	RESISTOR 8.25K .1% .125W F TC=0+-25	19701	MF4C1/8-T9-8251-B
A1A5R49	0757-0428	1		RESISTOR 1.62K 1% .125W F TC=0+-100	24546	C4-1/8-T0-1621-F
A1A5R50	0757-0447	4		RESISTOR 16.2K 1% .125W F TC=0+-100	24546	C4-1/8-T0-1622-F
A1A5R51	0757-0458	7		RESISTOR 51.1K 1% .125W F TC=0+-100	24546	C4-1/8-T0-5112-F
A1A5R52	0757-0279	0	1	RESISTOR 3.16K 1% .125W F TC=0+-100	24546	C4-1/8-T0-3161-F
A1A5R53	0757-0447	4		RESISTOR 16.2K 1% .125W F TC=0+-100	24546	C4-1/8-T0-1622-F
A1A5R54	0757-0458	7		RESISTOR 51.1K 1% .125W F TC=0+-100	24546	C4-1/8-T0-5112-F
A1A5R55	0757-0438	3		RESISTOR 5.11K 1% .125W F TC=0+-100	24546	C4-1/8-T0-5111-F
A1A5R56	0757-0466	7	1	RESISTOR 110K 1% .125W F TC=0+-100	24546	C4-1/8-T0-1103-F
A1A5R57	0698-0085	0		RESISTOR 2.61K 1% .125W F TC=0+-100	24546	C4-1/8-T0-2611-F
A1A5R58	0757-0438	3		RESISTOR 5.11K 1% .125W F TC=0+-100	24546	C4-1/8-T0-5111-F
A1A5R59	0698-3450	9		RESISTOR 42.2K 1% .125W F TC=0+-100	24546	C4-1/8-T0-4222-F
A1A5R60	2100-3103	6		RESISTOR-TRMR 10K 10% C SIDE-ADJ 17-TRN	02111	43P103
A1A5R61	0757-0395	1	1	RESISTOR 56.2 1% .125W F TC=0+-100	24546	C4-1/8-T0-56R2-F
A1A5R62	0757-0458	7		RESISTOR 51.1K 1% .125W F TC=0+-100	24546	C4-1/8-T0-5112-F
A1A5R63	0698-3161	9	1	RESISTOR 38.3K 1% .125W F TC=0+-100	24546	C4-1/8-T0-3832-F
A1A5TP1	1251-0600	0		CONNECTOR-SGL CONT PIN 1.14-MM-BSC-SZ SQ	28480	1251-0600
A1A5TP2	1251-0600	0		CONNECTOR-SGL CONT PIN 1.14-MM-BSC-SZ SQ	28480	1251-0600
A1A5TP3	1251-0600	0		CONNECTOR-SGL CONT PIN 1.14-MM-BSC-SZ SQ	28480	1251-0600
A1A5TP4	1251-0600	0		CONNECTOR-SGL CONT PIN 1.14-MM-BSC-SZ SQ	28480	1251-0600
A1A5TP5	1251-0600	0		CONNECTOR-SGL CONT PIN 1.14-MM-BSC-SZ SQ	28480	1251-0600
A1A5TP6	1251-0600	0		CONNECTOR-SGL CONT PIN 1.14-MM-BSC-SZ SQ	28480	1251-0600
A1A5TP7	1251-0600	0		CONNECTOR-SGL CONT PIN 1.14-MM-BSC-SZ SQ	28480	1251-0600
A1A5TP8	1251-0600	0		CONNECTOR-SGL CONT PIN 1.14-MM-BSC-SZ SQ	28480	1251-0600
A1A5TP9	1251-0600	0		CONNECTOR-SGL CONT PIN 1.14-MM-BSC-SZ SQ	28480	1251-0600
A1A5TP10	1251-0600	0		CONNECTOR-SGL CONT PIN 1.14-MM-BSC-SZ SQ	28480	1251-0600
A1A5U1	1826-0972	8	1	IC-DAC 10-BIT	28480	1826-0972
A1A5U2	1826-0798	6	2	IC CONV 8-B-D/A	18324	NE5018F
A1A5U3	1820-1445	0		IC LCH TTL LS 4-BIT	01295	SN74LS375N
A1A5U4	1826-0798	6		IC CONV 8-B-D/A	18324	NE5018F
A1A5U5	1826-0025	2	2	IC OP AMP LOW-DRIFT TO-99 PKG	27014	LM208AH
A1A5U6	1826-0217	4	4	IC OP AMP GP DUAL TO-99 PKG	07933	RC4558T
A1A5U7	1826-0026	3	1	IC COMPARATOR PRCN TO-99 PKG	01295	LM311L
A1A5U8	1820-0495	8	1	IC DCDR TTL 4-TO-16-LINE 4-INP	01295	SN74154N
A1A5U9	1820-1917	1	1	IC BFR TTL LS LINE DRVR OCTL	01295	SN74LS240N
A1A5U10	1826-0191	3	1	IC COMPARATOR GP DUAL TO-100 PKG	27014	LM319H
A1A5U11	1826-0059	2		IC OP AMP GP TO-99 PKG	01295	LM201AL
A1A5U12	1820-1208	3	1	IC GATE TTL LS OR QUAD 2-INP	01295	SN74LS32N
A1A6	08673-60029	4	1	METER BOARD ASSEMBLY	28480	08673-60029
A1A6C1	0180-0291	3		CAPACITOR-FXD 1UF+-10% 35VDC TA	56289	150D105X9035A2
A1A6C2	0180-1746	5		CAPACITOR-FXD 15UF+-10% 20VDC TA	56289	150D156X9020B2
A1A6C3	0180-0291	3		CAPACITOR-FXD 1UF+-10% 35VDC TA	56289	150D105X9035A2
A1A6C4	0180-2207	5	5	CAPACITOR-FXD 100UF+-10% 10VDC TA	56289	150D107X9010R2
A1A6C5	0180-0197	8		CAPACITOR-FXD 2.2UF+-10% 20VDC TA	56289	150D225X9020A2
A1A6C6	0180-2207	5		CAPACITOR-FXD 100UF+-10% 10VDC TA	56289	150D107X9010R2
A1A6C7	0180-0291	3		CAPACITOR-FXD 1UF+-10% 35VDC TA	56289	150D105X9035A2
A1A6C8	0180-0197	8		CAPACITOR-FXD 2.2UF+-10% 20VDC TA	56289	150D225X9020A2
A1A6C9	0180-0291	3		CAPACITOR-FXD 1UF+-10% 35VDC TA	56289	150D105X9035A2
A1A6C10	0180-2620	6		CAPACITOR-FXD 2.2UF+-10% 50VDC TA	25088	D2R2GS1B50K
A1A6C11	0180-0197	8		CAPACITOR-FXD 2.2UF+-10% 20VDC TA	56289	150D225X9020A2
A1A6C12	0180-0491	5		CAPACITOR-FXD 10UF+-20% 25VDC TA	28480	0180-0491
A1A6C13	0180-0197	8		CAPACITOR-FXD 2.2UF+-10% 20VDC TA	56289	150D225X9020A2
A1A6C14	0180-0291	3		CAPACITOR-FXD 1UF+-10% 35VDC TA	56289	150D105X9035A2
A1A6C15	0180-2619	3	1	CAPACITOR-FXD 22UF+-10% 15VDC TA	25088	D22GS1B15K
A1A6C16	0160-3875	3		CAPACITOR-FXD 22PF +-5% 200VDC CER 0+-30	28480	0160-3875
A1A6C17	0180-1746	5		CAPACITOR-FXD 15UF+-10% 20VDC TA	56289	150D156X9020B2
A1A6C18	0160-2252	8	1	CAPACITOR-FXD 6.2PF +-.25PF 500VDC CER	28480	0160-2252
A1A6C19	0180-0197	8		CAPACITOR-FXD 2.2UF+-10% 20VDC TA	56289	150D225X9020A2
A1A6C20	0160-3875	3		CAPACITOR-FXD 22PF +-5% 200VDC CER 0+-30	28480	0160-3875
A1A6C21	0180-0197	8		CAPACITOR-FXD 2.2UF+-10% 20VDC TA	56289	150D225X9020A2
A1A6C22	0180-1746	5		CAPACITOR-FXD 15UF+-10% 20VDC TA	56289	150D156X9020B2
A1A6C23	0180-0197	8		CAPACITOR-FXD 2.2UF+-10% 20VDC TA	56289	150D225X9020A2
A1A6C24	0180-0197	8		CAPACITOR-FXD 2.2UF+-10% 20VDC TA	56289	150D225X9020A2
A1A6C25	0160-3879	7		CAPACITOR-FXD .01UF +-20% 100VDC CER	28480	0160-3879
A1A6C26	0180-2206	4	2	CAPACITOR-FXD 60UF+-10% 6VDC TA	56289	150D606X9006B2
A1A6C27	0180-2206	4		CAPACITOR-FXD 60UF+-10% 6VDC TA	56289	150D606X9006B2
A1A6C28	0180-1746	5		CAPACITOR-FXD 15UF+-10% 20VDC TA	56289	150D156X9020B2
A1A6C29	0180-0291	3		CAPACITOR-FXD 1UF+-10% 35VDC TA	56289	150D105X9035A2
A1A6C30	0180-0197	8		CAPACITOR-FXD 2.2UF+-10% 20VDC TA	56289	150D225X9020A2
A1A6C31	0180-2207	5		CAPACITOR-FXD 100UF+-10% 10VDC TA	56289	150D107X9010R2
A1A6C32	0180-0229	7		CAPACITOR-FXD 33UF+-10% 10VDC TA	56289	150D336X9010B2
A1A6C33	0180-0291	3		CAPACITOR-FXD 1UF+-10% 35VDC TA	56289	150D105X9035A2

See introduction to this section for ordering information
*Indicates factory selected value

Table 6-3. Replaceable Parts

Reference Designation	HP Part Number	C D	Qty	Description	Mfr Code	Mfr Part Number
A1A6CR1	1901-0535	9	6	DIODE-SM SIG SCHOTTKY	28480	1901-0535
A1A6CR2	1901-0040	1		DIODE-SWITCHING 30V 50MA 2NS DO-35	28480	1901-0040
A1A6CR3	1901-0535	9		DIODE-SM SIG SCHOTTKY	28480	1901-0535
A1A6CR4	1901-0040	1		DIODE-SWITCHING 30V 50MA 2NS DO-35	28480	1901-0040
A1A6CR5	1901-0040	1		DIODE-SWITCHING 30V 50MA 2NS DO-35	28480	1901-0040
A1A6CR6	1901-0040	1		DIODE-SWITCHING 30V 50MA 2NS DO-35	28480	1901-0040
A1A6CR7	1901-0040	1		DIODE-SWITCHING 30V 50MA 2NS DO-35	28480	1901-0040
A1A6CR8	1901-0040	1		DIODE-SWITCHING 30V 50MA 2NS DO-35	28480	1901-0040
A1A6CR9	1901-0040	1		DIODE-SWITCHING 30V 50MA 2NS DO-35	28480	1901-0040
A1A6CR10	1901-0050	3		DIODE-SWITCHING 80V 200MA 2NS DO-35	28480	1901-0050
A1A6CR11	1901-0050	3		DIODE-SWITCHING 80V 200MA 2NS DO-35	28480	1901-0050
A1A6CR12	1901-0040	1		DIODE-SWITCHING 30V 50MA 2NS DO-35	28480	1901-0040
A1A6CR13	1901-0535	9		DIODE-SM SIG SCHOTTKY	28480	1901-0535
A1A6CR14	1901-0535	9		DIODE-SM SIG SCHOTTKY	28480	1901-0535
A1A6CR15	1901-0535	9		DIODE-SM SIG SCHOTTKY	28480	1901-0535
A1A6CR16	1901-0535	9		DIODE-SM SIG SCHOTTKY	28480	1901-0535
A1A6CR17	1901-0050	3		DIODE-SWITCHING 80V 200MA 2NS DO-35	28480	1901-0050
A1A6CR18	1901-0050	3		DIODE-SWITCHING 80V 200MA 2NS DO-35	28480	1901-0050
A1A6MP1	1200-0173	5	1	INSULATOR-XSTR DAP-GL	28480	1200-0173
A1A6MP2	1480-0073	6		PIN-ROLL .062-IN-DIA .25-IN-LG BE-CU	28480	1480-0073
A1A6MP3	4040-0748	3		EXTR-PC BD BLK POLYC .062-BD-THKNS	28480	4040-0748
A1A6MP4	4040-0754	1	1	EXTR-PC BD BLU POLYC .062-BD-THKNS	28480	4040-0754
A1A6Q1	1854-0810	2		TRANSISTOR NPN SI PD=625MW FT=200MHZ	28480	1854-0810
A1A6Q2	1854-0810	2		TRANSISTOR NPN SI PD=625MW FT=200MHZ	28480	1854-0810
A1A6Q3	1854-0610	0	5	TRANSISTOR NPN SI TO-46 FT=800MHZ	28480	1854-0610
A1A6Q4	1854-0610	0		TRANSISTOR NPN SI TO-46 FT=800MHZ	28480	1854-0610
A1A6Q5	1854-0810	2		TRANSISTOR NPN SI PD=625MW FT=200MHZ	28480	1854-0810
A1A6Q6	1854-0810	2		TRANSISTOR NPN SI PD=625MW FT=200MHZ	28480	1854-0810
A1A6Q7	1854-0809	9		TRANSISTOR NPN 2N2369A SI TO-18 PD=360MW	28480	1854-0809
A1A6Q8	1854-0810	2		TRANSISTOR NPN SI PD=625MW FT=200MHZ	28480	1854-0810
A1A6Q9	1854-0809	9		TRANSISTOR NPN 2N2369A SI TO-18 PD=360MW	28480	1854-0809
A1A6Q10	1854-0810	2		TRANSISTOR NPN SI PD=625MW FT=200MHZ	28480	1854-0810
A1A6Q11	1854-0810	2		TRANSISTOR NPN SI PD=625MW FT=200MHZ	28480	1854-0810
A1A6Q12	1854-0810	2		TRANSISTOR NPN SI PD=625MW FT=200MHZ	28480	1854-0810
A1A6Q13	1854-0610	0		TRANSISTOR NPN SI TO-46 FT=800MHZ	28480	1854-0610
A1A6Q14	1854-0597	2	1	TRANSISTOR NPN 2N5943 SI TO-39 PD=1W	04713	2N5943
A1A6Q15	1854-0610	0		TRANSISTOR NPN SI TO-46 FT=800MHZ	28480	1854-0610
A1A6Q16	1854-0610	0		TRANSISTOR NPN SI TO-46 FT=800MHZ	28480	1854-0610
A1A6Q17	1854-0477	7		TRANSISTOR NPN 2N2222A SI TO-18 PD=500MW	04713	2N2222A
A1A6Q18	1853-0281	9	1	TRANSISTOR PNP 2N2907A SI TO-18 PD=400MW	04713	2N2907A
A1A6Q19	1853-0459	3		TRANSISTOR PNP SI PD=625MW FT=200MHZ	28480	1853-0459
A1A6Q20	1854-0810	2		TRANSISTOR NPN SI PD=625MW FT=200MHZ	28480	1854-0810
A1A6Q21	1854-0810	2		TRANSISTOR NPN SI PD=625MW FT=200MHZ	28480	1854-0810
A1A6R1	0757-0442	9		RESISTOR 10K 1% .125W F TC=0+-100	24546	C4-1/8-T0-1002-F
A1A6R2	0757-0442	9		RESISTOR 10K 1% .125W F TC=0+-100	24546	C4-1/8-T0-1002-F
A1A6R3	0757-0442	9		RESISTOR 10K 1% .125W F TC=0+-100	24546	C4-1/8-T0-1002-F
A1A6R4	0757-0442	9		RESISTOR 10K 1% .125W F TC=0+-100	24546	C4-1/8-T0-1002-F
A1A6R5	0757-0199	3		RESISTOR 21.5K 1% .125W F TC=0+-100	24546	C4-1/8-T0-2152-F
A1A6R6	0698-7188	8		RESISTOR 10 1% .05W F TC=0+-100	24546	C3-1/8-T0-10R-F
A1A6R7	0757-0438	3		RESISTOR 5.11K 1% .125W F TC=0+-100	24546	C4-1/8-T0-5111-F
A1A6R8	0757-0397	3	1	RESISTOR 68.1 1% .125W F TC=0+-100	24546	C4-1/8-T0-68R1-F
A1A6R9	0757-0290	5		RESISTOR 6.19K 1% .125W F TC=0+-100	19701	MF4C1/8-T0-6191-F
A1A6R10	0698-7188	8		RESISTOR 10 1% .05W F TC=0+-100	24546	C3-1/8-T0-10R-F
A1A6R11	0698-7205	0		RESISTOR 51.1 1% .05W F TC=0+-100	24546	C3-1/8-T0-51R1-F
A1A6R12	0757-0401	0		RESISTOR 100 1% .125W F TC=0+-100	24546	C4-1/8-T0-101-F
A1A6R13	0757-0389	3	1	RESISTOR 33.2 1% .125W F TC=0+-100	24546	C4-1/8-T0-33R2-F
A1A6R14	0698-8651	2	1	RESISTOR 16.7 1% .05W F TC=0+-100	28480	0698-8651
A1A6R15	0698-5068	9	1	RESISTOR 50 1% .125W F TC=0+-25	28480	0698-5068
A1A6R16	0698-7188	8		RESISTOR 10 1% .05W F TC=0+-100	24546	C3-1/8-T0-10R-F
A1A6R17	0698-7205	0		RESISTOR 51.1 1% .05W F TC=0+-100	24546	C3-1/8-T0-51R1-F
A1A6R18	0698-0083	8		RESISTOR 1.96K 1% .125W F TC=0+-100	24546	C4-1/8-T0-1961-F
A1A6R19	0698-0083	8		RESISTOR 1.96K 1% .125W F TC=0+-100	24546	C4-1/8-T0-1961-F
A1A6R20	0698-0083	8		RESISTOR 1.96K 1% .125W F TC=0+-100	24546	C4-1/8-T0-1961-F
A1A6R21	0698-0083	8		RESISTOR 1.96K 1% .125W F TC=0+-100	24546	C4-1/8-T0-1961-F
A1A6R22	0698-0083	8		RESISTOR 1.96K 1% .125W F TC=0+-100	24546	C4-1/8-T0-1961-F
A1A6R23	0698-3136	8		RESISTOR 17.8K 1% .125W F TC=0+-100	24546	C4-1/8-T0-1782-F
A1A6R24	0757-0418	9	3	RESISTOR 619 1% .125W F TC=0+-100	24546	C4-1/8-T0-619R-F
A1A6R25	0757-0797	7		RESISTOR 90.9 1% .5W F TC=0+-100	28480	0757-0797
A1A6R26	0757-0394	0	1	RESISTOR 51.1 1% .125W F TC=0+-100	24546	C4-1/8-T0-51R1-F
A1A6R27	0698-0084	9		RESISTOR 2.15K 1% .125W F TC=0+-100	24546	C4-1/8-T0-2151-F
A1A6R28	0698-7188	8		RESISTOR 10 1% .05W F TC=0+-100	24546	C3-1/8-T0-10R-F
A1A6R29	0698-7209	4	1	RESISTOR 75 1% .05W F TC=0+-100	24546	C3-1/8-T0-75R0-F
A1A6R30	0757-0403	2	1	RESISTOR 121 1% .125W F TC=0+-100	24546	C4-1/8-T0-121R-F

See introduction to this section for ordering information
*Indicates factory selected value

Table 6-3. Replaceable Parts

Reference Designation	HP Part Number	C D	Qty	Description	Mfr Code	Mfr Part Number
A1A6R31	0698-7236	7		RESISTOR 1K 1% .05W F TC=0+-100	24546	C3-1/8-T0-1001-F
A1A6R32	0698-7233	4	3	RESISTOR 750 1% .05W F TC=0+-100	24546	C3-1/8-T0-750R-F
A1A6R33	0698-7205	0		RESISTOR 51.1 1% .05W F TC=0+-100	24546	C3-1/8-T0-51R1-F
A1A6R34	0698-7224	3		RESISTOR 316 1% .05W F TC=0+-100	24546	C3-1/8-T0-316R-F
A1A6R35	2100-2574	3		RESISTOR-TRMR 500 10% C SIDE-ADJ 1-TRN	30983	ET50X501
A1A6R36	0698-0083	8		RESISTOR 1.96K 1% .125W F TC=0+-100	24546	C4-1/8-T0-1961-F
A1A6R37	0698-7241	4	1	RESISTOR 1.62K 1% .05W F TC=0+-100	24546	C3-1/8-T0-1621-F
A1A6R38	0698-7238	9		RESISTOR 1.21K 1% .05W F TC=0+-100	24546	C3-1/8-T0-1211-F
A1A6R39	0698-7224	3		RESISTOR 316 1% .05W F TC=0+-100	24546	C3-1/8-T0-316R-F
A1A6R40	0698-8816	1	1	RESISTOR 2.15 1% .125W F TC=0+-100	28480	0698-8816
A1A6R41	0698-7260	7		RESISTOR 10K 1% .05W F TC=0+-100	24546	C3-1/8-T0-1002-F
A1A6R42	0698-7230	1	1	RESISTOR 562 1% .05W F TC=0+-100	24546	C3-1/8-T0-562R-F
A1A6R43	0698-3438	3		RESISTOR 147 1% .125W F TC=0+-100	24546	C4-1/8-T0-147R-F
A1A6R44	0698-3438	3		RESISTOR 147 1% .125W F TC=0+-100	24546	C4-1/8-T0-147R-F
A1A6R45	0698-8817	2		RESISTOR 2.61 1% .125W F TC=0+-100	28480	0698-8817
A1A6R46	0757-0402	1		RESISTOR 110 1% .125W F TC=0+-100	24546	C4-1/8-T0-111-F
A1A6R47	0757-0180	2		RESISTOR 31.6 1% .125W F TC=0+-100	28480	0757-0180
A1A6R48	0757-0378	0	1	RESISTOR 11 1% .125W F TC=0+-100	19701	MF4C1/8-T0-11R0-F
A1A6R49	0757-0280	3		RESISTOR 1K 1% .125W F TC=0+-100	24546	C4-1/8-T0-1001-F
A1A6R50	0698-7260	7		RESISTOR 10K 1% .05W F TC=0+-100	24546	C3-1/8-T0-1002-F
A1A6R51	0698-7251	6	1	RESISTOR 4.22K 1% .05W F TC=0+-100	24546	C3-1/8-T0-4221-F
A1A6R52	0698-7263	0		RESISTOR 13.3K 1% .05W F TC=0+-100	24546	C3-1/8-T0-1332-F
A1A6R53	0698-7236	7		RESISTOR 1K 1% .05W F TC=0+-100	24546	C3-1/8-T0-1001-F
A1A6R54	2100-2632	4	1	RESISTOR-TRMR 100 10% C SIDE-ADJ 1-TRN	30983	ET50X101
A1A6R55	0698-7220	9	1	RESISTOR 215 1% .05W F TC=0+-100	24546	C3-1/8-T0-215R-F
A1A6R56	0698-7205	0		RESISTOR 51.1 1% .05W F TC=0+-100	24546	C3-1/8-T0-51R1-F
A1A6R57	0757-0418	9		RESISTOR 619 1% .125W F TC=0+-100	24546	C4-1/8-T0-619R-F
A1A6R58	0698-7265	2	1	RESISTOR 16.2K 1% .05W F TC=0+-100	24546	C3-1/8-T0-1622-F
A1A6R59	0698-7188	8		RESISTOR 10 1% .05W F TC=0+-100	24546	C3-1/8-T0-10R-F
A1A6R60	0698-7229	8		RESISTOR 511 1% .05W F TC=0+-100	24546	C3-1/8-T0-511R-F
A1A6R61	0757-0405	4	2	RESISTOR 162 1% .125W F TC=0+-100	24546	C4-1/8-T0-162R-F
A1A6R62	0757-0405	4		RESISTOR 162 1% .125W F TC=0+-100	24546	C4-1/8-T0-162R-F
A1A6R63	0698-3132	4	1	RESISTOR 261 1% .125W F TC=0+-100	24546	C4-1/8-T0-2610-F
A1A6R64	0683-1055	5	1	RESISTOR 1M 5% .25W FC TC=-800/+900	01121	CB1055
A1A6R65	0698-7212	9		RESISTOR 100 1% .05W F TC=0+-100	24546	C3-1/8-T0-100R-F
A1A6R66	0698-7260	7		RESISTOR 10K 1% .05W F TC=0+-100	24546	C3-1/8-T0-1002-F
A1A6R67	0698-7288	9	1	RESISTOR 147K 1% .05W F TC=0+-100	24546	C3-1/8-T0-1473-F
A1A6R68	0698-0083	8		RESISTOR 1.96K 1% .125W F TC=0+-100	24546	C4-1/8-T0-1961-F
A1A6R69	0698-7233	4		RESISTOR 750 1% .05W F TC=0+-100	24546	C3-1/8-T0-750R-F
A1A6R70	2100-2574	3		RESISTOR-TRMR 500 10% C SIDE-ADJ 1-TRN	30983	ET50X501
A1A6R71	0698-3152	8		RESISTOR 3.48K 1% .125W F TC=0+-100	24546	C4-1/8-T0-3481-F
A1A6R72	0757-0462	3	1	RESISTOR 75K 1% .125W F TC=0+-100	24546	C4-1/8-T0-7502-F
A1A6R73	0698-0083	8		RESISTOR 1.96K 1% .125W F TC=0+-100	24546	C4-1/8-T0-1961-F
A1A6R74	0757-0418	9		RESISTOR 619 1% .125W F TC=0+-100	24546	C4-1/8-T0-619R-F
A1A6R75	0757-0416	7		RESISTOR 511 1% .125W F TC=0+-100	24546	C4-1/8-T0-511R-F
A1A6R76	0698-3155	1		RESISTOR 4.64K 1% .125W F TC=0+-100	24546	C4-1/8-T0-4641-F
A1A6R77	0698-7232	3	1	RESISTOR 681 1% .05W F TC=0+-100	24546	C3-1/8-T0-681R-F
A1A6R78	0698-3447	4		RESISTOR 422 1% .125W F TC=0+-100	24546	C4-1/8-T0-422R-F
A1A6R79	0698-7188	8		RESISTOR 10 1% .05W F TC=0+-100	24546	C3-1/8-T0-10R-F
A1A6R80	0698-7216	3		RESISTOR 147 1% .05W F TC=0+-100	24546	C3-1/8-T0-147R-F
A1A6R81	0698-3156	2		RESISTOR 14.7K 1% .125W F TC=0+-100	24546	C4-1/8-T0-1472-F
A1A6R82	0698-7260	7		RESISTOR 10K 1% .05W F TC=0+-100	24546	C3-1/8-T0-1002-F
A1A6R83	0698-7233	4		RESISTOR 750 1% .05W F TC=0+-100	24546	C3-1/8-T0-750R-F
A1A6R84	2100-2574	3		RESISTOR-TRMR 500 10% C SIDE-ADJ 1-TRN	30983	ET50X501
A1A6TP1	1251-0600	0		CONNECTOR-SGL CONT PIN 1.14-MM-BSC-SZ SQ	28480	1251-0600
A1A6TP2	1251-0600	0		CONNECTOR-SGL CONT PIN 1.14-MM-BSC-SZ SQ	28480	1251-0600
A1A6TP3	1251-0600	0		CONNECTOR-SGL CONT PIN 1.14-MM-BSC-SZ SQ	28480	1251-0600
A1A6TP4	1251-0600	0		CONNECTOR-SGL CONT PIN 1.14-MM-BSC-SZ SQ	28480	1251-0600
A1A6TP5	1251-0600	0		CONNECTOR-SGL CONT PIN 1.14-MM-BSC-SZ SQ	28480	1251-0600
A1A6TP6	1251-0600	0		CONNECTOR-SGL CONT PIN 1.14-MM-BSC-SZ SQ	28480	1251-0600
A1A6TP7	1251-0600	0		CONNECTOR-SGL CONT PIN 1.14-MM-BSC-SZ SQ	28480	1251-0600
A1A6U1	1820-0919	1	1	IC COMPTR ECL A/D DUAL	04713	MC1650L
A1A6U2	1826-0256	1	1	IC COMPARATOR HS DUAL 14-DIP-P PKG	18324	NE522A
A1A6U3	1820-1374	4	2	IC SWITCH ANLG QUAD 16-DIP-P PKG	24355	AD7510DIJN
A1A6U4	1826-0582	6		IC SWITCH ANLG QUAD 16-DIP-C PKG	27014	LF13201D
A1A6U5	1820-1445	0		IC LCH TTL LS 4-BIT	01295	SN74LS375N
A1A6U6	1820-1445	0		IC LCH TTL LS 4-BIT	01295	SN74LS375N
A1A6U7	1820-1374	4		IC SWITCH ANLG QUAD 16-DIP-P PKG	24355	AD7510DIJN
A1A6VR1	1902-0962	8		DIODE-ZNR 15V 5% DO-35 PD=.4W TC=+.087%	28480	1902-0962
A1A6VR2	1902-0951	5		DIODE-ZNR 5.1V 5% DO-35 PD=.4W TC=+.035%	28480	1902-0951
A1A6VR3	1902-0957	1	1	DIODE-ZNR 9.1V 5% DO-35 PD=.4W TC=+.069%	28480	1902-0957
A1A7	08673-60032	9	1	YTM DRIVER BOARD ASSEMBLY	28480	08673-60032

See introduction to this section for ordering information
*Indicates factory selected value

Table 6-3. Replaceable Parts

Reference Designation	HP Part Number	C D	Qty	Description	Mfr Code	Mfr Part Number
A1A7C1	0180-0291	3		CAPACITOR-FXD 1UF+-10% 35VDC TA	56289	150D105X9035A2
A1A7C2	0180-2141	6	4	CAPACITOR-FXD 3.3UF+-10% 50VDC TA	56289	150D335X9050B2
A1A7C3	0180-0291	3		CAPACITOR-FXD 1UF+-10% 35VDC TA	56289	150D105X9035A2
A1A7C4	0180-2141	6		CAPACITOR-FXD 3.3UF+-10% 50VDC TA	56289	150D335X9050B2
A1A7C5	0160-4387	4		CAPACITOR-FXD 47PF +-5% 200VDC CER 0+-30	28480	0160-4387
A1A7C6	0180-0197	8		CAPACITOR-FXD 2.2UF+-10% 20VDC TA	56289	150D225X9020A2
A1A7C7	0160-4387	4		CAPACITOR-FXD 47PF +-5% 200VDC CER 0+-30	28480	0160-4387
A1A7C8	0180-0291	3		CAPACITOR-FXD 1UF+-10% 35VDC TA	56289	150D105X9035A2
A1A7C9	0160-0576	5		CAPACITOR-FXD .1UF +-20% 50VDC CER	28480	0160-0576
A1A7C10	0160-4387	4		CAPACITOR-FXD 47PF +-5% 200VDC CER 0+-30	28480	0160-4387
A1A7C11	0160-2055	9		CAPACITOR-FXD .01UF +80-20% 100VDC CER	28480	0160-2055
A1A7C12	0160-2055	9		CAPACITOR-FXD .01UF +80-20% 100VDC CER	28480	0160-2055
A1A7C13	0160-4387	4		CAPACITOR-FXD 47PF +-5% 200VDC CER 0+-30	28480	0160-4387
A1A7C14	0160-3491	9	1	CAPACITOR-FXD .47UF +-20% 50VDC CER	28480	0160-3491
A1A7C15	0160-0576	5		CAPACITOR-FXD .1UF +-20% 50VDC CER	28480	0160-0576
A1A7C16	0160-4387	4		CAPACITOR-FXD 47PF +-5% 200VDC CER 0+-30	28480	0160-4387
A1A7C17	0160-2055	9		CAPACITOR-FXD .01UF +80-20% 100VDC CER	28480	0160-2055
A1A7C18	0160-4387	4		CAPACITOR-FXD 47PF +-5% 200VDC CER 0+-30	28480	0160-4387
A1A7C19	0160-2055	9		CAPACITOR-FXD .01UF +80-20% 100VDC CER	28480	0160-2055
A1A7C20	0160-4387	4		CAPACITOR-FXD 47PF +-5% 200VDC CER 0+-30	28480	0160-4387
A1A7C21	0160-2055	9		CAPACITOR-FXD .01UF +80-20% 100VDC CER	28480	0160-2055
A1A7C22	0160-0576	5		CAPACITOR-FXD .1UF +-20% 50VDC CER	28480	0160-0576
A1A7CR1	1901-0376	6	7	DIODE-GEN PRP 35V 50MA DO-35	28480	1901-0376
A1A7CR2	1901-0050	3		DIODE-SWITCHING 80V 200MA 2NS DO-35	28480	1901-0050
A1A7CR3	1901-0050	3		DIODE-SWITCHING 80V 200MA 2NS DO-35	28480	1901-0050
A1A7CR4	1901-0376	6		DIODE-GEN PRP 35V 50MA DO-35	28480	1901-0376
A1A7CR5	1901-0376	6		DIODE-GEN PRP 35V 50MA DO-35	28480	1901-0376
A1A7CR6	1901-0376	6		DIODE-GEN PRP 35V 50MA DO-35	28480	1901-0376
A1A7CR7	1901-0376	6		DIODE-GEN PRP 35V 50MA DO-35	28480	1901-0376
A1A7CR8	1901-0376	6		DIODE-GEN PRP 35V 50MA DO-35	28480	1901-0376
A1A7CR9	1901-0050	3		DIODE-SWITCHING 80V 200MA 2NS DO-35	28480	1901-0050
A1A7MP1	1480-0073	6		PIN-ROLL .062-IN-DIA .25-IN-LG BE-CU	28480	1480-0073
A1A7MP2	4040-0748	3		EXTR-PC BD BLK POLYC .062-BD-THKNS	28480	4040-0748
A1A7MP3	4040-0755	2	1	EXTR-PC BD VIO POLYC .062-BD-THKNS	28480	4040-0755
A1A7Q1	1853-0462	8	1	TRANSISTOR PNP 2N3635 SI TO-39 PD=1W	01295	2N3635
A1A7Q2	1854-0637	1		TRANSISTOR NPN 2N2219A SI TO-5 PD=800MW	01295	2N2219A
A1A7Q3	1853-0459	3		TRANSISTOR PNP SI PD=625MW FT=200MHZ	28480	1853-0459
A1A7Q4	1854-0810	2		TRANSISTOR NPN SI PD=625MW FT=200MHZ	28480	1854-0810
A1A7Q5	1855-0020	8	3	TRANSISTOR J-FET N-CHAN D-MODE TO-18 SI	28480	1855-0020
A1A7Q6	1855-0020	8		TRANSISTOR J-FET N-CHAN D-MODE TO-18 SI	28480	1855-0020
A1A7Q7	1855-0020	8		TRANSISTOR J-FET N-CHAN D-MODE TO-18 SI	28480	1855-0020
A1A7Q8	1854-0810	2		TRANSISTOR NPN SI PD=625MW FT=200MHZ	28480	1854-0810
A1A7Q9	1853-0314	9		TRANSISTOR PNP 2N2905A SI TO-39 PD=600MW	04713	2N2905A
A1A7Q10	1854-0475	5		TRANSISTOR-DUAL NPN PD=750MW	28480	1854-0475
A1A7Q11	1854-0810	2		TRANSISTOR NPN SI PD=625MW FT=200MHZ	28480	1854-0810
A1A7Q12	1853-0459	3		TRANSISTOR PNP SI PD=625MW FT=200MHZ	28480	1853-0459
A1A7R1	0698-0085	0		RESISTOR 2.61K 1% .125W F TC=0+-100	24546	C4-1/8-T0-2611-F
A1A7R2	0757-0288	1		RESISTOR 9.09K 1% .125W F TC=0+-100	19701	MF4C1/8-T0-9091-F
A1A7R3	0698-3334	8	1	RESISTOR 178 1% .5W F TC=0+-100	28480	0698-3334
A1A7R4	0757-0814	9	1	RESISTOR 511 1% .5W F TC=0+-100	28480	0757-0814
A1A7R5	0811-2870	7	2	RESISTOR 1.96K 1% .05W PWW TC=0+-10	14140	1409-1/20-D-1961-F
A1A7R6	0757-0421	4		RESISTOR 825 1% .125W F TC=0+-100	24546	C4-1/8-T0-825R-F
A1A7R7	0811-3372	6	1	RESISTOR 1.71K 1% .05W PWW TC=0+-10	28480	0811-3372
A1A7R8	2100-3351	6		RESISTOR-TRMR 500 10% C SIDE-ADJ 1-TRN	28480	2100-3351
A1A7R9	0811-3598	8	1	RESISTOR-18.5K 1% .125W TC=0+-2PPM/C	28480	0811-3598
A1A7R10	0757-0280	3		RESISTOR 1K 1% .125W F TC=0+-100	24546	C4-1/8-T0-1001-F
A1A7R11	0757-0280	3		RESISTOR 1K 1% .125W F TC=0+-100	24546	C4-1/8-T0-1001-F
A1A7R12	0757-0464	5		RESISTOR 90.9K 1% .125W F TC=0+-100	24546	C4-1/8-T0-9092-F
A1A7R13	0698-3439	4	1	RESISTOR 178 1% .125W F TC=0+-100	24546	C4-1/8-T0-178R-F
A1A7R14	2100-3152	5	1	RESISTOR-TRMR 5K 10% MF SIDE-ADJ 25-TRN	28480	2100-3152
A1A7R15	0757-0401	0		RESISTOR 100 1% .125W F TC=0+-100	24546	C4-1/8-T0-101-F
A1A7R16	0757-0317	7		RESISTOR 1.33K 1% .125W F TC=0+-100	24546	C4-1/8-T0-1331-F
A1A7R17	2100-3103	6		RESISTOR-TRMR 10K 10% C SIDE-ADJ 17-TRN	02111	43P103
A1A7R18	2100-3103	6		RESISTOR-TRMR 10K 10% C SIDE-ADJ 17-TRN	02111	43P103
A1A7R19	2100-3103	6		RESISTOR-TRMR 10K 10% C SIDE-ADJ 17-TRN	02111	43P103
A1A7R20	0698-7260	7		RESISTOR 10K 1% .05W F TC=0+-100	24546	C3-1/8-T0-1002-F
A1A7R21	0698-7260	7		RESISTOR 10K 1% .05W F TC=0+-100	24546	C3-1/8-T0-1002-F
A1A7R22	0698-7260	7		RESISTOR 10K 1% .05W F TC=0+-100	24546	C3-1/8-T0-1002-F
A1A7R23	0698-7260	7		RESISTOR 10K 1% .05W F TC=0+-100	24546	C3-1/8-T0-1002-F
A1A7R24	0757-0419	0		RESISTOR 681 1% .125W F TC=0+-100	24546	C4-1/8-T0-681R-F
A1A7R25	0811-3373	7	3	RESISTOR 17.8K .1% .05W PWW TC=0+-10	28480	0811-3373
A1A7R26	0811-3373	7		RESISTOR 17.8K .1% .05W PWW TC=0+-10	28480	0811-3373
A1A7R27	0811-3373	7		RESISTOR 17.8K .1% .05W PWW TC=0+-10	28480	0811-3373
A1A7R28	0757-0442	9		RESISTOR 10K 1% .125W F TC=0+-100	24546	C4-1/8-T0-1002-F
A1A7R29	0757-0442	9		RESISTOR 10K 1% .125W F TC=0+-100	24546	C4-1/8-T0-1002-F
A1A7R30	0757-0442	9		RESISTOR 10K 1% .125W F TC=0+-100	24546	C4-1/8-T0-1002-F

See introduction to this section for ordering information
*Indicates factory selected value

Table 6-3. Replaceable Parts

Reference Designation	HP Part Number	C D	Qty	Description	Mfr Code	Mfr Part Number
A1A7R31	0811-3369	1	2	RESISTOR 12K .1% .125W PWW TC=0+-10	28480	0811-3369
A1A7R32	0811-3359	9	4	RESISTOR 12.5K .1% .05W PWW TC=0+-5	28480	0811-3359
A1A7R33	0811-3369	1		RESISTOR 12K .1% .125W PWW TC=0+-10	28480	0811-3369
A1A7R34	0757-0417	8	1	RESISTOR 562 1% .125W F TC=0+-100	24546	C4-1/8-T0-562R-F
A1A7R35	0811-3366	8	4	RESISTOR 5K .1% .05W PWW TC=0+-2	28480	0811-3366
A1A7R36	0811-3366	8		RESISTOR 5K .1% .05W PWW TC=0+-2	28480	0811-3366
A1A7R37	0811-3366	8		RESISTOR 5K .1% .05W PWW TC=0+-2	28480	0811-3366
A1A7R38	0811-3366	8		RESISTOR 5K .1% .05W PWW TC=0+-2	28480	0811-3366
A1A7R39	0757-0317	7		RESISTOR 1.33K 1% .125W F TC=0+-100	24546	C4-1/8-T0-1331-F
A1A7R40	0698-3162	0	1	RESISTOR 46.4K 1% .125W F TC=0+-100	24546	C4-1/8-T0-4642-F
A1A7R41	0757-0439	4		RESISTOR 6.81K 1% .125W F TC=0+-100	24546	C4-1/8-T0-6811-F
A1A7R42	0811-3368	0	1	RESISTOR 100K 1% .05W PWW TC=0+-10	28480	0811-3368
A1A7R43	0811-0648	3	2	RESISTOR 50K .01% .125W PWW TC=0+-10	28480	0811-0648
A1A7R44	0811-0648	3		RESISTOR 50K .01% .125W PWW TC=0+-10	28480	0811-0648
A1A7R45	0757-0401	0		RESISTOR 100 1% .125W F TC=0+-100	24546	C4-1/8-T0-101-F
A1A7R46	0811-2870	7		RESISTOR 1.96K 1% .05W PWW TC=0+-10	14140	1409-1/20-D-1961-F
A1A7R47	0698-5446	7	1	RESISTOR 31.6K .25% .125W F TC=0+-50	28480	0698-5446
A1A7R48	0757-0401	0		RESISTOR 100 1% .125W F TC=0+-100	24546	C4-1/8-T0-101-F
A1A7R49	0757-0289	2		RESISTOR 13.3K 1% .125W F TC=0+-100	19701	MF4C1/8-T0-1332-F
A1A7R50	0757-0416	7		RESISTOR 511 1% .125W F TC=0+-100	24546	C4-1/8-T0-511R-F
A1A7R51	2100-3274	2		RESISTOR-TRMR 10K 10% C SIDE-ADJ 1-TRN	28480	2100-3274
A1A7R52	0757-0401	0		RESISTOR 100 1% .125W F TC=0+-100	24546	C4-1/8-T0-101-F
A1A7R53	0811-2675	0	2	RESISTOR 1K .02% .2W PWW TC=0+-10	14140	1283-1/20-D-1001-Q
A1A7R54	2100-3274	2		RESISTOR-TRMR 10K 10% C SIDE-ADJ 1-TRN	28480	2100-3274
A1A7R55	2100-3274	2		RESISTOR-TRMR 10K 10% C SIDE-ADJ 1-TRN	28480	2100-3274
A1A7R56	0698-3151	7		RESISTOR 2.87K 1% .125W F TC=0+-100	24546	C4-1/8-T0-2871-F
A1A7R57	0811-3202	1		RESISTOR 30.615K .1% .05W PWW TC=0+-10	14140	1409-1/40-30615R-B
A1A7R58	0811-3370	4	2	RESISTOR 20K 1% .05W PWW TC=0+-10	28480	0811-3370
A1A7R59	0698-3151	7		RESISTOR 2.87K 1% .125W F TC=0+-100	24546	C4-1/8-T0-2871-F
A1A7R60	0811-3370	4		RESISTOR 20K 1% .05W PWW TC=0+-10	28480	0811-3370
A1A7R61	0811-3135	9	3	RESISTOR 10K .1% .125W PWW TC=0+-10	28480	0811-3135
A1A7R62	0811-3135	9		RESISTOR 10K .1% .125W PWW TC=0+-10	28480	0811-3135
A1A7R63	0811-3396	4	1	RESISTOR 11K 1% .05W PWW TC=0+-2	28480	0811-3396
A1A7R64	0811-3135	9		RESISTOR 10K .1% .125W PWW TC=0+-10	28480	0811-3135
A1A7R65	0757-0401	0		RESISTOR 100 1% .125W F TC=0+-100	24546	C4-1/8-T0-101-F
A1A7R66	2100-3103	6		RESISTOR-TRMR 10K 10% C SIDE-ADJ 17-TRN	02111	43P103
A1A7R67	2100-3103	6		RESISTOR-TRMR 10K 10% C SIDE-ADJ 17-TRN	02111	43P103
A1A7R68	2100-3103	6		RESISTOR-TRMR 10K 10% C SIDE-ADJ 17-TRN	02111	43P103
A1A7R69	2100-3103	6		RESISTOR-TRMR 10K 10% C SIDE-ADJ 17-TRN	02111	43P103
A1A7R70	0811-2675	0		RESISTOR 1K .02% .2W PWW TC=0+-10	14140	1283-1/20-D-1001-Q
A1A7TP1	1251-0600	0		CONNECTOR-SGL CONT PIN 1.14-MM-BSC-SZ SQ	28480	1251-0600
A1A7TP2	1251-0600	0		CONNECTOR-SGL CONT PIN 1.14-MM-BSC-SZ SQ	28480	1251-0600
A1A7TP3	1251-0600	0		CONNECTOR-SGL CONT PIN 1.14-MM-BSC-SZ SQ	28480	1251-0600
A1A7TP4	1251-0600	0		CONNECTOR-SGL CONT PIN 1.14-MM-BSC-SZ SQ	28480	1251-0600
A1A7TP5	1251-0600	0		CONNECTOR-SGL CONT PIN 1.14-MM-BSC-SZ SQ	28480	1251-0600
A1A7U1	1820-0223	0	7	IC OP AMP GP TO-99 PKG	3L585	CA301AT
A1A7U2	1820-0223	0		IC OP AMP GP TO-99 PKG	3L585	CA301AT
A1A7U3	1826-0229	8	1	IC OP AMP LOW-DRIFT TO-99 PKG	06665	OP-05CJ
A1A7U4	1826-0582	6		IC SWITCH ANLG QUAD 16-DIP-C PKG	27014	LF13201D
A1A7U5	1826-0582	6		IC SWITCH ANLG QUAD 16-DIP-C PKG	27014	LF13201D
A1A7U6	1826-0582	6		IC SWITCH ANLG QUAD 16-DIP-C PKG	27014	LF13201D
A1A7U7	1820-0223	0		IC OP AMP GP TO-99 PKG	3L585	CA301AT
A1A7U8	1820-0223	0		IC OP AMP GP TO-99 PKG	3L585	CA301AT
A1A7U9	1820-0223	0		IC OP AMP GP TO-99 PKG	3L585	CA301AT
A1A7U10	1820-0223	0		IC OP AMP GP TO-99 PKG	3L585	CA301AT
A1A7U11	1820-0223	0		IC OP AMP GP TO-99 PKG	3L585	CA301AT
A1A7VR1	1902-0958	2	1	DIODE-ZNR 10V 5% DO-35 PD=.4W TC=+.075%	28480	1902-0958
A1A7VR2	1902-0680	7	1	DIODE-ZNR 1N827 6.2V 5% DO-7 PD=.4W	24046	1N827
A1A7VR3	1902-0956	0	1	DIODE-ZNR 8.2V 5% DO-35 PD=.4W TC=+.065%	28480	1902-0956
A1A7VR4	1902-0965	1	1	DIODE-ZNR 20V 5% DO-35 PD=.4W TC=+.092%	28480	1902-0965
A1A8	08673-60033	0	1	STEP RECOVERY DIODE ASSEMBLY	28480	08673-60033
A1A8C1	0180-0291	3		CAPACITOR-FXD 1UF+-10% 35VDC TA	56289	150D105X9035A2
A1A8C2	0180-0197	8		CAPACITOR-FXD 2.2UF+-10% 20VDC TA	56289	150D225X9020A2
A1A8C3	0180-2141	6		CAPACITOR-FXD 3.3UF+-10% 50VDC TA	56289	150D335X9050B2
A1A8C4	0180-2141	6		CAPACITOR-FXD 3.3UF+-10% 50VDC TA	56289	150D335X9050B2
A1A8C5	0160-0570	9		CAPACITOR-FXD 220PF +-20% 100VDC CER	20932	5024EM100RD221M
A1A8C6	0160-3879	7		CAPACITOR-FXD .01UF +-20% 100VDC CER	28480	0160-3879
A1A8C7	0160-3879	7		CAPACITOR-FXD .01UF +-20% 100VDC CER	28480	0160-3879
A1A8C8	0160-0576	5		CAPACITOR-FXD .1UF +-20% 50VDC CER	28480	0160-0576
A1A8C9	0180-0291	3		CAPACITOR-FXD 1UF+-10% 35VDC TA	56289	150D105X9035A2
A1A8C10	0180-0291	3		CAPACITOR-FXD 1UF+-10% 35VDC TA	56289	150D105X9035A2
A1A8C11	0160-3876	4		CAPACITOR-FXD 47PF +-20% 200VDC CER	28480	0160-3876
A1A8C12	0180-2661	5		CAPACITOR-FXD 1UF+-10% 50VDC TA	25088	D1R0GS1A50K
A1A8C13	0160-0571	0	5	CAPACITOR-FXD 470PF +-20% 100VDC CER	28480	0160-0571
A1A8C14	0160-3879	7		CAPACITOR-FXD .01UF +-20% 100VDC CER	28480	0160-3879
A1A8C15	0160-0571	0		CAPACITOR-FXD 470PF +-20% 100VDC CER	28480	0160-0571

See introduction to this section for ordering information
*Indicates factory selected value

Table 6-3. Replaceable Parts

Reference Designation	HP Part Number	C D	Qty	Description	Mfr Code	Mfr Part Number
A1A8C16	0160-3877	5		CAPACITOR-FXD 100PF +-20% 200VDC CER	28480	0160-3877
A1A8C17	0160-0571	0		CAPACITOR-FXD 470PF +-20% 100VDC CER	28480	0160-0571
A1A8C18	0160-0571	0		CAPACITOR-FXD 470PF +-20% 100VDC CER	28480	0160-0571
A1A8C19	0160-0571	0		CAPACITOR-FXD 470PF +-20% 100VDC CER	28480	0160-0571
A1A8C20	0160-3877	5		CAPACITOR-FXD 100PF +-20% 200VDC CER	28480	0160-3877
A1A8CR1	1901-0376	6		DIODE-GEN PRP 35V 50MA DO-35	28480	1901-0376
A1A8L1	9140-0210	1	1	INDUCTOR RF-CH-MLD 100UH 5% .166DX.385LG	28480	9140-0210
A1A8MP1	1480-0073	6		PIN-ROLL .062-IN-DIA .25-IN-LG BE-CU	28480	1480-0073
A1A8MP2	4040-0747	2	1	EXTR-PC BD GRA POLYC .062-BD-THKNS	28480	4040-0747
A1A8MP3	4040-0748	3		EXTR-PC BD BLK POLYC .062-BD-THKNS	28480	4040-0748
A1A8Q1	1853-0459	3		TRANSISTOR PNP SI PD=625MW FT=200MHZ	28480	1853-0459
A1A8Q2	1853-0459	3		TRANSISTOR PNP SI PD=625MW FT=200MHZ	28480	1853-0459
A1A8Q3	1853-0459	3		TRANSISTOR PNP SI PD=625MW FT=200MHZ	28480	1853-0459
A1A8Q4	1853-0459	3		TRANSISTOR PNP SI PD=625MW FT=200MHZ	28480	1853-0459
A1A8Q5	1853-0459	3		TRANSISTOR PNP SI PD=625MW FT=200MHZ	28480	1853-0459
A1A8Q6	1853-0459	3		TRANSISTOR PNP SI PD=625MW FT=200MHZ	28480	1853-0459
A1A8Q7	1854-0477	7		TRANSISTOR NPN 2N2222A SI TO-18 PD=500MW	04713	2N2222A
A1A8Q8	1853-0459	3		TRANSISTOR PNP SI PD=625MW FT=200MHZ	28480	1853-0459
A1A8Q9	1853-0459	3		TRANSISTOR PNP SI PD=625MW FT=200MHZ	28480	1853-0459
A1A8Q10	1853-0459	3		TRANSISTOR PNP SI PD=625MW FT=200MHZ	28480	1853-0459
A1A8Q11	1853-0459	3		TRANSISTOR PNP SI PD=625MW FT=200MHZ	28480	1853-0459
A1A8Q12	1854-0810	2		TRANSISTOR NPN SI PD=625MW FT=200MHZ	28480	1854-0810
A1A8Q13	1854-0810	2		TRANSISTOR NPN SI PD=625MW FT=200MHZ	28480	1854-0810
A1A8Q14	1854-0810	2		TRANSISTOR NPN SI PD=625MW FT=200MHZ	28480	1854-0810
A1A8R1	0757-0346	2		RESISTOR 10 1% .125W F TC=0+-100	24546	C4-1/8-T0-10R0-F
A1A8R2	0757-0438	3		RESISTOR 5.11K 1% .125W F TC=0+-100	24546	C4-1/8-T0-5111-F
A1A8R3	0698-3152	8		RESISTOR 3.48K 1% .125W F TC=0+-100	24546	C4-1/8-T0-3481-F
A1A8R4	0757-0346	2		RESISTOR 10 1% .125W F TC=0+-100	24546	C4-1/8-T0-10R0-F
A1A8R5	0757-0346	2		RESISTOR 10 1% .125W F TC=0+-100	24546	C4-1/8-T0-10R0-F
A1A8R6	0757-0346	2		RESISTOR 10 1% .125W F TC=0+-100	24546	C4-1/8-T0-10R0-F
A1A8R7	0757-0401	0		RESISTOR 100 1% .125W F TC=0+-100	24546	C4-1/8-T0-101-F
A1A8R8	0698-6360	6	3	RESISTOR 10K .1% .125W F TC=0+-25	28480	0698-6360
A1A8R9	0757-0401	0		RESISTOR 100 1% .125W F TC=0+-100	24546	C4-1/8-T0-101-F
A1A8R10	2100-3056	8	8	RESISTOR-TRMR 5K 10% C SIDE-ADJ 17-TRN	02111	43P502
A1A8R11	2100-3056	8		RESISTOR-TRMR 5K 10% C SIDE-ADJ 17-TRN	02111	43P502
A1A8R12	2100-3056	8		RESISTOR-TRMR 5K 10% C SIDE-ADJ 17-TRN	02111	43P502
A1A8R13	2100-3054	6	3	RESISTOR-TRMR 50K 10% C SIDE-ADJ 17-TRN	02111	43P503
A1A8R14	2100-3054	6		RESISTOR-TRMR 50K 10% C SIDE-ADJ 17-TRN	02111	43P503
A1A8R15	2100-3054	6		RESISTOR-TRMR 50K 10% C SIDE-ADJ 17-TRN	02111	43P503
A1A8R16	0698-0083	8		RESISTOR 1.96K 1% .125W F TC=0+-100	24546	C4-1/8-T0-1961-F
A1A8R17	0698-0083	8		RESISTOR 1.96K 1% .125W F TC=0+-100	24546	C4-1/8-T0-1961-F
A1A8R18	0698-0083	8		RESISTOR 1.96K 1% .125W F TC=0+-100	24546	C4-1/8-T0-1961-F
A1A8R19	0757-0289	2		RESISTOR 13.3K 1% .125W F TC=0+-100	19701	MF4C1/8-T0-1332-F
A1A8R20	0757-0289	2		RESISTOR 13.3K 1% .125W F TC=0+-100	19701	MF4C1/8-T0-1332-F
A1A8R21	0757-0289	2		RESISTOR 13.3K 1% .125W F TC=0+-100	19701	MF4C1/8-T0-1332-F
A1A8R22	0757-0401	0		RESISTOR 100 1% .125W F TC=0+-100	24546	C4-1/8-T0-101-F
A1A8R23	0757-0438	3		RESISTOR 5.11K 1% .125W F TC=0+-100	24546	C4-1/8-T0-5111-F
A1A8R24	0757-0438	3		RESISTOR 5.11K 1% .125W F TC=0+-100	24546	C4-1/8-T0-5111-F
A1A8R25	0757-0438	3		RESISTOR 5.11K 1% .125W F TC=0+-100	24546	C4-1/8-T0-5111-F
A1A8R26	0757-0401	0		RESISTOR 100 1% .125W F TC=0+-100	24546	C4-1/8-T0-101-F
A1A8R27	0811-3202	1		RESISTOR 30.615K .1% .05W PWW TC=0+-10	14140	1409-1/40-30615R-B
A1A8R28	0757-0280	3		RESISTOR 1K 1% .125W F TC=0+-100	24546	C4-1/8-T0-1001-F
A1A8R29	0811-3138	2	3	RESISTOR 25K .1% .125W PWW TC=0+-10	20940	114-1/16-2502-B
A1A8R30	0757-0441	8		RESISTOR 8.25K 1% .125W F TC=0+-100	24546	C4-1/8-T0-8251-F
A1A8R31	2100-3056	8		RESISTOR-TRMR 5K 10% C SIDE-ADJ 17-TRN	02111	43P502
A1A8R32	2100-3056	8		RESISTOR-TRMR 5K 10% C SIDE-ADJ 17-TRN	02111	43P502
A1A8R33	2100-3056	8		RESISTOR-TRMR 5K 10% C SIDE-ADJ 17-TRN	02111	43P502
A1A8R34	0811-3360	2	4	RESISTOR 25K .1% .05W PWW TC=0+-5	28480	0811-3360
A1A8R35	0811-0574	4	1	RESISTOR 26.80K .1% .05W PWW TC=0+-10	20940	140-1/8-D-26801-B
A1A8R36	0811-3138	2		RESISTOR 25K .1% .125W PWW TC=0+-10	20940	114-1/16-2502-B
A1A8R37	0811-3138	2		RESISTOR 25K .1% .125W PWW TC=0+-10	20940	114-1/16-2502-B
A1A8R38	0698-3150	6		RESISTOR 2.37K 1% .125W F TC=0+-100	24546	C4-1/8-T0-2371-F
A1A8R39	0811-3360	2		RESISTOR 25K .1% .05W PWW TC=0+-5	28480	0811-3360
A1A8R40	0811-3360	2		RESISTOR 25K .1% .05W PWW TC=0+-5	28480	0811-3360
A1A8R41	0811-3360	2		RESISTOR 25K .1% .05W PWW TC=0+-5	28480	0811-3360
A1A8R42	0757-0465	6		RESISTOR 100K 1% .125W F TC=0+-100	24546	C4-1/8-T0-1003-F
A1A8R43	0698-3157	3		RESISTOR 19.6K 1% .125W F TC=0+-100	24546	C4-1/8-T0-1962-F
A1A8R44	0698-0083	8		RESISTOR 1.96K 1% .125W F TC=0+-100	24546	C4-1/8-T0-1961-F
A1A8R45	0698-3157	3		RESISTOR 19.6K 1% .125W F TC=0+-100	24546	C4-1/8-T0-1962-F
A1A8R46	0698-3158	4		RESISTOR 23.7K 1% .125W F TC=0+-100	24546	C4-1/8-T0-2372-F
A1A8R47	0757-0288	1		RESISTOR 9.09K 1% .125W F TC=0+-100	19701	MF4C1/8-T0-9091-F
A1A8R48	0698-3442	9	1	RESISTOR 237 1% .125W F TC=0+-100	24546	C4-1/8-T0-237R-F
A1A8R49	0757-0280	3		RESISTOR 1K 1% .125W F TC=0+-100	24546	C4-1/8-T0-1001-F
A1A8R50	2100-3161	6	2	RESISTOR-TRMR 20K 10% C SIDE-ADJ 17-TRN	02111	43P203

See introduction to this section for ordering information
*Indicates factory selected value

Table 6-3. Replaceable Parts

Reference Designation	HP Part Number	C D	Qty	Description	Mfr Code	Mfr Part Number
A1A8R51	0698-3160	8		RESISTOR 31.6K 1% .125W F TC=0+-100	24546	C4-1/8-T0-3162-F
A1A8R52	0698-3136	8		RESISTOR 17.8K 1% .125W F TC=0+-100	24546	C4-1/8-T0-1782-F
A1A8R53	0698-3156	2		RESISTOR 14.7K 1% .125W F TC=0+-100	24546	C4-1/8-T0-1472-F
A1A8R54	0698-3153	9		RESISTOR 3.83K 1% .125W F TC=0+-100	24546	C4-1/8-T0-3831-F
A1A8R55	2100-3094	4	2	RESISTOR-TRMR 100K 10% C SIDE-ADJ 17-TRN	02111	43P104
A1A8R56	0811-3359	9		RESISTOR 12.5K .1% .05W PWW TC=0+-5	28480	0811-3359
A1A8R57	0811-3359	9		RESISTOR 12.5K .1% .05W PWW TC=0+-5	28480	0811-3359
A1A8R58	0811-3359	9		RESISTOR 12.5K .1% .05W PWW TC=0+-5	28480	0811-3359
A1A8R59	0698-3160	8		RESISTOR 31.6K 1% .125W F TC=0+-100	24546	C4-1/8-T0-3162-F
A1A8R60	0698-6358	2	1	RESISTOR 100K .1% .125W F TC=0+-25	28480	0698-6358
A1A8R61	2100-3103	6		RESISTOR-TRMR 10K 10% C SIDE-ADJ 17-TRN	02111	43P103
A1A8R62	2100-3056	8		RESISTOR-TRMR 5K 10% C SIDE-ADJ 17-TRN	02111	43P502
A1A8R63	2100-3056	8		RESISTOR-TRMR 5K 10% C SIDE-ADJ 17-TRN	02111	43P502
A1A8R64	0698-3159	5	1	RESISTOR 26.1K 1% .125W F TC=0+-100	24546	C4-1/8-T0-2612-F
A1A8R65	0757-0444	1		RESISTOR 12.1K 1% .125W F TC=0+-100	24546	C4-1/8-T0-1212-F
A1A8R66	0698-0085	0		RESISTOR 2.61K 1% .125W F TC=0+-100	24546	C4-1/8-T0-2611-F
A1A8R67	2100-3161	6		RESISTOR-TRMR 20K 10% C SIDE-ADJ 17-TRN	02111	43P203
A1A8R68	0698-3160	8		RESISTOR 31.6K 1% .125W F TC=0+-100	24546	C4-1/8-T0-3162-F
A1A8R69	0811-3234	9	3	RESISTOR 10K 1% .05W PWW TC=0+-10	20940	140-1/20-1002-F
A1A8R70	0811-3234	9		RESISTOR 10K 1% .05W PWW TC=0+-10	20940	140-1/20-1002-F
A1A8R71	0811-3234	9		RESISTOR 10K 1% .05W PWW TC=0+-10	20940	140-1/20-1002-F
A1A8R72	0698-3160	8		RESISTOR 31.6K 1% .125W F TC=0+-100	24546	C4-1/8-T0-3162-F
A1A8R73	0698-3136	8		RESISTOR 17.8K 1% .125W F TC=0+-100	24546	C4-1/8-T0-1782-F
A1A8R74	0757-0443	0	1	RESISTOR 11K 1% .125W F TC=0+-100	24546	C4-1/8-T0-1102-F
A1A8R75	0698-3154	0		RESISTOR 4.22K 1% .125W F TC=0+-100	24546	C4-1/8-T0-4221-F
A1A8R76	0698-8642	1	1	RESISTOR 56.2K .1% .125W F TC=0+-25	28480	0698-8642
A1A8R77	0698-6866	7	1	RESISTOR 2.182K .25% .125W F TC=0+-50	28480	0698-6866
A1A8R78	0699-0272	9	2	RESISTOR 75K .1% .125W F TC=0+-25	28480	0699-0272
A1A8R79	0698-6838	3	2	RESISTOR 3.88K .5% .125W F TC=0+-50	24546	NC55-1/8-T2-3881-D
A1A8R80	0699-0272	9		RESISTOR 75K .1% .125W F TC=0+-25	28480	0699-0272
A1A8R81	0698-6838	3		RESISTOR 3.88K .5% .125W F TC=0+-50	24546	NC55-1/8-T2-3881-D
A1A8R82	2100-3094	4		RESISTOR-TRMR 100K 10% C SIDE-ADJ 17-TRN	02111	43P104
A1A8R83	0698-3160	8		RESISTOR 31.6K 1% .125W F TC=0+-100	24546	C4-1/8-T0-3162-F
A1A8R84	2100-3154	7		RESISTOR-TRMR 1K 10% C SIDE-ADJ 17-TRN	02111	43P102
A1A8R85	2100-3154	7		RESISTOR-TRMR 1K 10% C SIDE-ADJ 17-TRN	02111	43P102
A1A8R86	2100-3154	7		RESISTOR-TRMR 1K 10% C SIDE-ADJ 17-TRN	02111	43P102
A1A8R87	2100-3154	7		RESISTOR-TRMR 1K 10% C SIDE-ADJ 17-TRN	02111	43P102
A1A8R88	0698-3153	9		RESISTOR 3.83K 1% .125W F TC=0+-100	24546	C4-1/8-T0-3831-F
A1A8R89	0757-1094	9		RESISTOR 1.47K 1% .125W F TC=0+-100	24546	C4-1/8-T0-1471-F
A1A8R90	0698-6360	6		RESISTOR 10K .1% .125W F TC=0+-25	28480	0698-6360
A1A8R91	0698-6360	6		RESISTOR 10K .1% .125W F TC=0+-25	28480	0698-6360
A1A8R92	0757-0200	7	1	RESISTOR 5.62K 1% .125W F TC=0+-100	24546	C4-1/8-T0-5621-F
A1A8R93	0698-3150	6		RESISTOR 2.37K 1% .125W F TC=0+-100	24546	C4-1/8-T0-2371-F
A1A8R94	0698-3260	9	1	RESISTOR 464K 1% .125W F TC=0+-100	28480	0698-3260
A1A8R95	0699-0096	5		RESISTOR 12K .1% .1W F TC=0+-10	28480	0699-0096
A1A8R96	0698-8638	5	4	RESISTOR 3.16K .1% .125W F TC=0+-25	28480	0698-8638
A1A8R97	0698-8638	5		RESISTOR 3.16K .1% .125W F TC=0+-25	28480	0698-8638
A1A8R98	0698-8638	5		RESISTOR 3.16K .1% .125W F TC=0+-25	28480	0698-8638
A1A8R99	0698-8638	5		RESISTOR 3.16K .1% .125W F TC=0+-25	28480	0698-8638
A1A8R100	0698-3156	2		RESISTOR 14.7K 1% .125W F TC=0+-100	24546	C4-1/8-T0-1472-F
A1A8R101	0698-3156	2		RESISTOR 14.7K 1% .125W F TC=0+-100	24546	C4-1/8-T0-1472-F
A1A8R102	0698-3156	2		RESISTOR 14.7K 1% .125W F TC=0+-100	24546	C4-1/8-T0-1472-F
A1A8R103	0757-0442	9		RESISTOR 10K 1% .125W F TC=0+-100	24546	C4-1/8-T0-1002-F
A1A8R104	0757-0442	9		RESISTOR 10K 1% .125W F TC=0+-100	24546	C4-1/8-T0-1002-F
A1A8R105	0757-0442	9		RESISTOR 10K 1% .125W F TC=0+-100	24546	C4-1/8-T0-1002-F
A1A8TP1	1251-0600	0		CONNECTOR-SGL CONT PIN 1.14-MM-BSC-SZ SQ	28480	1251-0600
A1A8TP2	1251-0600	0		CONNECTOR-SGL CONT PIN 1.14-MM-BSC-SZ SQ	28480	1251-0600
A1A8TP3	1251-0600	0		CONNECTOR-SGL CONT PIN 1.14-MM-BSC-SZ SQ	28480	1251-0600
A1A8TP4	1251-0600	0		CONNECTOR-SGL CONT PIN 1.14-MM-BSC-SZ SQ	28480	1251-0600
A1A8U1	1826-0217	4		IC OP AMP GP DUAL TO-99 PKG	07933	RC4558T
A1A8U2	1826-0582	6		IC SWITCH ANLG QUAD 16-DIP-C PKG	27014	LF13201D
A1A8U3	1826-0323	3	1	IC OP AMP GP QUAD 14-DIP-C PKG	28480	1826-0323
A1A8U4	1826-0582	6		IC SWITCH ANLG QUAD 16-DIP-C PKG	27014	LF13201D
A1A8U5	1820-1445	0		IC LCH TTL LS 4-BIT	01295	SN74LS375N
A1A8U6	1826-0582	6		IC SWITCH ANLG QUAD 16-DIP-C PKG	27014	LF13201D
A1A8U7	1826-0217	4		IC OP AMP GP DUAL TO-99 PKG	07933	RC4558T
A1A8U8	1826-0217	4		IC OP AMP GP DUAL TO-99 PKG	07933	RC4558T
A1A8U9	1826-0059	2		IC OP AMP GP TO-99 PKG	01295	LM201AL
A1A8VR1	1902-0554	4	2	DIODE-ZNR 10V 5% PD=1W IR=10UA	28480	1902-0554
A1A8VR2	1902-0579	3	1	DIODE-ZNR 5.1V 5% PD=1W IR=10UA	28480	1902-0579
A1A8VR3	1902-0554	4		DIODE-ZNR 10V 5% PD=1W IR=10UA	28480	1902-0554
A1A9	08673-67001	6	1	PREAMP ASSEMBLY	28480	08673-67001
	08673-67201	8	1	RESTORED 08673-67001	28480	08673-67201

See introduction to this section for ordering information
*Indicates factory selected value

Table 6-3. Replaceable Parts

Reference Designation	HP Part Number	C D	Qty	Description	Mfr Code	Mfr Part Number
A1A10	08673-67003	8	1	YTM ASSEMBLY	28480	08673-67003
	08673-67203	0	1	RESTORED 08673-67003	28480	08673-67203
A1A10A1	08673-60027	2	1	YTM HEATER BOARD ASSEMBLY	28480	08673-60027
A1A10A1C1	0160-0127	2		CAPACITOR-FXD 1UF +-20% 25VDC CER	28480	0160-0127
A1A10A1C2	0160-3876	4		CAPACITOR-FXD 47PF +-20% 200VDC CER	28480	0160-3876
A1A10A1C3	0160-2055	9		CAPACITOR-FXD .01UF +80-20% 100VDC CER	28480	0160-2055
A1A10A1C4				NOT ASSIGNED		
A1A10A1C5	0160-3876	4		CAPACITOR-FXD 47PF +-20% 200VDC CER	28480	0160-3876
A1A10A1C6	0160-2055	9		CAPACITOR-FXD .01UF +80-20% 100VDC CER	28480	0160-2055
A1A10A1C7	0180-2104	1	1	CAPACITOR-FXD 40UF+-20% 30VDC TA	06001	69F2143G7
A1A10A1C8	0160-0576	5		CAPACITOR-FXD .1UF +-20% 50VDC CER	28480	0160-0576
A1A10A1C9	0160-0576	5		CAPACITOR-FXD .1UF +-20% 50VDC CER	28480	0160-0576
A1A10A1CR1	1901-0050	3		DIODE-SWITCHING 80V 200MA 2NS DO-35	28480	1901-0050
A1A10A1E 1-6	1251-3172	7	6	CONNECTOR-SGL CONT SKT .03-IN-BSC-SZ RND	28480	1251-3172
A1A10A1J1	1250-0257	1	7	CONNECTOR-RF SMB M PC 50-OHM	28480	1250-0257
A1A10A1J2	1200-0508	0	3	SOCKET-IC 14-CONT DIP-SLDR	28480	1200-0508
A1A10A1Q1	1853-0314	9		TRANSISTOR PNP 2N2905A SI TO-39 PD=600MW	04713	2N2905A
A1A10A1R1	0698-7252	7		RESISTOR 4.64K 1% .05W F TC=0+-100	24546	C3-1/8-T0-4641-F
A1A10A1R2	0698-7260	7		RESISTOR 10K 1% .05W F TC=0+-100	24546	C3-1/8-T0-1002-F
A1A10A1R3	0698-7260	7		RESISTOR 10K 1% .05W F TC=0+-100	24546	C3-1/8-T0-1002-F
A1A10A1R4	0698-7188	8		RESISTOR 10 1% .05W F TC=0+-100	24546	C3-1/8-T0-10R-F
A1A10A1R5	0698-7277	6		RESISTOR 51.1K 1% .05W F TC=0+-100	24546	C3-1/8-T0-5112-F
A1A10A1R6	0698-7260	7		RESISTOR 10K 1% .05W F TC=0+-100	24546	C3-1/8-T0-1002-F
A1A10A1R7	0698-7212	9		RESISTOR 100 1% .05W F TC=0+-100	24546	C3-1/8-T0-100R-F
A1A10A1R8	0698-7212	9		RESISTOR 100 1% .05W F TC=0+-100	24546	C3-1/8-T0-100R-F
A1A10A1R9	0698-7188	8		RESISTOR 10 1% .05W F TC=0+-100	24546	C3-1/8-T0-10R-F
A1A10A1R10	0757-0288	1		RESISTOR 9.09K 1% .125W F TC=0+-100	19701	MF4C1/8-T0-9091-F
A1A10A1R11	0699-0068	1		RESISTOR-1.47M 1% .125W	28480	0699-0068
A1A10A1R12	0698-7237	8	1	RESISTOR 1.1K 1% .05W F TC=0+-100	24546	C3-1/8-T0-1101-F
A1A10A1R13	0757-0180	2		RESISTOR 31.6 1% .125W F TC=0+-100	28480	0757-0180
A1A10A1TP1-A1A10A1TP9	0360-0535	0	1	TERMINAL TEST POINT PCB	00000	ORDER BY DESCRIPTION
A1A10A1U1	1826-0059	2		IC OP AMP GP TO-99 PKG	01295	LM201AL
A1A10A1U2	1826-0025	2		IC OP AMP LOW-DRIFT TO-99 PKG	27014	LM208AH
A1A10A1VR1	1902-0176	6	1	DIODE-ZNR 47V 5% PD=1W IR=5UA	28480	1902-0176
A1A11	08673-67004	9	1	POWER AMP	28480	08673-67004
	08673-67204	1	1	RESTORED 08673-67004	28480	08673-67204
A1A12	08673-60025	0		MOTHERBOARD ASSEMBLY	28480	08673-60025
A1A12C1	0180-2207	5		CAPACITOR-FXD 100UF+-10% 10VDC TA	56289	150D107X9010R2
A1A12C2	0180-2207	5		CAPACITOR-FXD 100UF+-10% 10VDC TA	56289	150D107X9010R2
A1A12C3	0160-0570	9		CAPACITOR-FXD 220PF +-20% 100VDC CER	20932	5024EM100RD221M
A1A12C4	0160-0570	9		CAPACITOR-FXD 220PF +-20% 100VDC CER	20932	5024EM100RD221M
A1A12C5	0160-0570	9		CAPACITOR-FXD 220PF +-20% 100VDC CER	20932	5024EM100RD221M
A1A12C6	0160-0570	9		CAPACITOR-FXD 220PF +-20% 100VDC CER	20932	5024EM100RD221M
A1A12C7	0160-0570	9		CAPACITOR-FXD 220PF +-20% 100VDC CER	20932	5024EM100RD221M
A1A12C8	0160-0570	9		CAPACITOR-FXD 220PF +-20% 100VDC CER	20932	5024EM100RD221M
A1A12C9	0160-0570	9		CAPACITOR-FXD 220PF +-20% 100VDC CER	20932	5024EM100RD221M
A1A12C10	0160-0570	9		CAPACITOR-FXD 220PF +-20% 100VDC CER	20932	5024EM100RD221M
A1A12C11	0160-0570	9		CAPACITOR-FXD 220PF +-20% 100VDC CER	20932	5024EM100RD221M
A1A12C12	0160-0570	9		CAPACITOR-FXD 220PF +-20% 100VDC CER	20932	5024EM100RD221M
A1A12C13	0160-0570	9		CAPACITOR-FXD 220PF +-20% 100VDC CER	20932	5024EM100RD221M
A1A12C14	0160-0570	9		CAPACITOR-FXD 220PF +-20% 100VDC CER	20932	5024EM100RD221M
A1A12C15	0160-0570	9		CAPACITOR-FXD 220PF +-20% 100VDC CER	20932	5024EM100RD221M
A1A12J1	1251-3905	4	1	CONNECTOR 20-PIN M RECTANGULAR	28480	1251-3905
A1A12J2	1250-0257	1		CONNECTOR-RF SMB M PC 50-OHM	28480	1250-0257
A1A12J3	1250-0257	1		CONNECTOR-RF SMB M PC 50-OHM	28480	1250-0257
A1A12J4	1250-0257	1		CONNECTOR-RF SMB M PC 50-OHM	28480	1250-0257
A1A12J5	1200-0508	0		SOCKET-IC 14-CONT DIP-SLDR	28480	1200-0508
A1A12J6	1250-0257	1		CONNECTOR-RF SMB M PC 50-OHM	28480	1250-0257
A1A12J7	1250-0257	1		CONNECTOR-RF SMB M PC 50-OHM	28480	1250-0257
A1A12J8	1250-0257	1		CONNECTOR-RF SMB M PC 50-OHM	28480	1250-0257
A1A12J9	1200-0508	0		SOCKET-IC 14-CONT DIP-SLDR	28480	1200-0508
A1A12J10	1251-3109	0	1	CONNECTOR 20-PIN M RECTANGULAR	28480	1251-3109
A1A12J11	1200-0812	9	1	SOCKET-IC 16-CONT DIP DIP-SLDR	28480	1200-0812
A1A12MP1	0380-0886	6	2	STANDOFF-RVT-ON .1-IN-LG 4-40THD	00000	ORDER BY DESCRIPTION
A1A12XA1	1251-1626	2	1	CONNECTOR-PC EDGE 12-CONT/ROW 2-ROWS	28480	1251-1626
A1A12XA2	1251-2026	8	5	CONNECTOR-PC EDGE 18-CONT/ROW 2-ROWS	28480	1251-2026
A1A12XA3	1251-1365	6	2	CONNECTOR-PC EDGE 22-CONT/ROW 2-ROWS	28480	1251-1365
A1A12XA4	1251-2026	8		CONNECTOR-PC EDGE 18-CONT/ROW 2-ROWS	28480	1251-2026
A1A12XA5	1251-1365	6		CONNECTOR-PC EDGE 22-CONT/ROW 2-ROWS	28480	1251-1365

See introduction to this section for ordering information
*Indicates factory selected value

Table 6-3. Replaceable Parts

Reference Designation	HP Part Number	C D	Qty	Description	Mfr Code	Mfr Part Number
A1A12XA6	1251-2026	8		CONNECTOR-PC EDGE 18-CONT/ROW 2-ROWS	28480	1251-2026
A1A12XA7	1251-2026	8		CONNECTOR-PC EDGE 18-CONT/ROW 2-ROWS	28480	1251-2026
A1A12XA8	1251-2026	8		CONNECTOR-PC EDGE 18-CONT/ROW 2-ROWS	28480	1251-2026
A1A12XA9	1251-0472	4	1	CONNECTOR-PC EDGE 6-CONT/ROW 2-ROWS	28480	1251-0472
A1AT1	08673-60043	2	1	PROGRAMMED ATTENUATOR- 90 DB	28480	08673-60043
A1AT1	08673-60096	5	1	PROGRAMMED ATTENUATOR-90 DB (RESTORED 08673-60043)	28480	08673-60096
A1AT2	0960-0362	3	1	ISOLATOR	28480	0960-0362
A1AT3	0955-0160	8	1	DIODE SWITCH	28480	0955-0160
A1AT4	0955-0163	1	1	COAXIAL ATTENUATOR	28480	0955-0163
A1CP1	11720-60002	8	1	BIAS TEE ASSEMBLY	28480	11720-60002
A1CR1	08673-60083	0	1	CRYSTAL DETECTOR ASSEMBLY	28480	08673-60083
A1DC1	0955-0125	5	1	DIRECTIONAL COUPLER	28480	0955-0125
A1FL1	11720-60003	9	1	HIGH PASS FILTER ASSEMBLY	28480	11720-60003
A1MP1	0340-0614	4	1	INSULATOR-XSTR POLYI HD-ANDZ	28480	0340-0614
A1MP2	0400-0018	0		GROMMET-CHAN NCH .052-IN-THK-PNL	28480	0400-0018
A1MP3	0403-0194	9	4	GUIDE-PC BD BE-CU .062-BD-THKNS 3.5-LG	28480	0403-0194
A1MP4	0520-0155	0	8	SCREW-MACH 2-56 .125-IN-LG PAN-HD-POZI	00000	ORDER BY DESCRIPTION
A1MP5	1200-0043	8	1	INSULATOR-XSTR ALUMINUM	28480	1200-0043
A1MP6	1200-0081	4	2	INSULATOR-FLG-BSHG NYLON	28480	1200-0081
A1MP7	1251-4459	5	4	CLIP-CABLE PLUG RTNG-DUAL INLINE 14 CONT	28480	1251-4459
A1MP8	2190-0018	5	2	WASHER-LK HLCL NO. 6 .141-IN-ID	28480	2190-0018
A1MP9	2190-0019	6	20	WASHER-LK HLCL NO. 4 .115-IN-ID	28480	2190-0019
A1MP10	2190-0045	8		WASHER-LK HLCL NO. 2 .088-IN-ID	28480	2190-0045
A1MP11	2200-0091	7	2	SCREW-MACH 4-40 .562-IN-LG PAN-HD-POZI	00000	ORDER BY DESCRIPTION
A1MP12	2200-0103	2		SCREW-MACH 4-40 .25-IN-LG PAN-HD-POZI	00000	ORDER BY DESCRIPTION
A1MP13	2200-0111	2	3	SCREW-MACH 4-40 .5-IN-LG PAN-HD-POZI	00000	ORDER BY DESCRIPTION
A1MP14	2200-0143	0	17	SCREW-MACH 4-40 .375-IN-LG PAN-HD-POZI	00000	ORDER BY DESCRIPTION
A1MP15	2200-0167	8	3	SCREW-MACH 4-40 .375-IN-LG 82 DEG	00000	ORDER BY DESCRIPTION
A1MP16	2200-0169	0	14	SCREW-MACH 4-40 .5-IN-LG 82 DEG	00000	ORDER BY DESCRIPTION
A1MP17	2260-0002	6	1	NUT-HEX-DBL-CHAM 4-40-THD .062-IN-THK	00000	ORDER BY DESCRIPTION
A1MP18	2360-0113	2	10	SCREW-MACH 6-32 .25-IN-LG PAN-HD-POZI	00000	ORDER BY DESCRIPTION
A1MP19	2360-0180	3	2	SCREW-MACH 6-32 .188-IN-LG 82 DEG	00000	ORDER BY DESCRIPTION
A1MP20	2360-0195	0	2	SCREW-MACH 6-32 .312-IN-LG PAN-HD-POZI	00000	ORDER BY DESCRIPTION
A1MP21	2360-0197	2	2	SCREW-MACH 6-32 .375-IN-LG PAN-HD-POZI	00000	ORDER BY DESCRIPTION
A1MP22	2360-0333	8	10	SCREW-MACH 6-32 .25-IN-LG 100 DEG	28480	2360-0333
A1MP23	2420-0001	5	4	NUT-HEX-W/LKWR 6-32-THD .109-IN-THK	00000	ORDER BY DESCRIPTION
A1MP24	3050-0010	2	6	WASHER-FL MTLC NO. 6 .147-IN-ID	28480	3050-0010
A1MP25	3050-0098	6	2	WASHER-FL MTLC NO. 2 .094-IN-ID	28480	3050-0098
A1MP26	3050-0105	6	1	WASHER-FL MTLC NO. 4 .125-IN-ID	28480	3050-0105
A1MP27	5040-0170	6	2	BOARD SUPPORT	28480	5040-0170
A1MP28	08673-00026	5	1	REAR SUPPORT	28480	08673-00026
A1MP29	08673-00027	6	1	SPACER-MICRODCIRCUIT	28480	08673-00027
A1MP30	08673-00028	7	1	GUSSET-RF (LEFT)	28480	08673-00028
A1MP31	08673-00029	8	1	GUSSET-RF (RIGHT)	28480	08673-00029
A1MP32	08673-00030	1	1	SUPPORT-P.C. (FRONT)	28480	08673-00030
A1MP33	08673-00031	2	1	CHASSIS	28480	08673-00031
A1MP34	08673-00032	3	1	SUPPORT-P.C. (REAR)	28480	08673-00032
A1MP35	08673-00033	4	1	SUPPORT-ISOLATOR	28480	08673-00033
A1MP36	08673-00034	5	2	SHIELD-PULSE BOARD	28480	08673-00034
A1MP37	08673-00045	8	1	SUPPORT-COUPLER	28480	08673-00045
A1MP38	08673-20046	1	1	SHIELD-ISOLATOR	28480	08673-20046
A1MP39	08673-20063	2	1	BUSHING	28480	08673-20063
A1Q1	1853-0344	5	1	TRANSISTOR PNP 2N5876 SI TO-3 PD=150W	04713	2N5876
A1R1	0811-3477	2	1	RESISTOR 25 1% 25W PW TC=0+-2	28480	0811-3477
A1W1				NOT ASSIGNED		
A1W2	08673-20053	0	1	CABLE ASSEMBLY-COUPLER OUTPUT	28480	08673-20053
A1W3	08673-20052	9	1	CABLE ASSEMBLY-YTM OUTPUT	28480	08673-20052
A1W4	08673-20050	7	1	CABLE ASSEMBLY-POWER AMP INPUT	28480	08673-20050
A1W5	08672-20067	5	1	CABLE ASSEMBLY-YTM INPUT	28480	08672-20067
A1W6	08672-60071	5	1	CABLE-RIBBON,14 COND(MOTHERBOARD TO YTM)	28480	08672-60071
A1W7	08673-60046	5	1	CABLE ASSEMBLY-PULSE MOD	28480	08673-60046
A1W8	08673-60049	8	1	CABLE ASSEMBLY-YTM PULSE	28480	08673-60049
A1W9	08673-60048	7	1	CABLE ASSEMBLY-BIAS TEE	28480	08673-60048
A1W10	08673-20051	8	1	CABLE ASSEMBLY-POWER AMP OUTPUT	28480	08673-20051
A1W11	08673-20049	4	1	CABLE ASSEMBLY-PREAMP OUTPUT	28480	08673-20049
A1W12	08673-60093	2	1	CABLE ASSEMBLY-RIBBON 14-PIN (PRE-AMP TO POWER AMP)	28480	08673-60093
A1W13	08673-60045	4	1	CABLE ASSEMBLY-ALC OUTPUT	28480	08673-60045

See introduction to this section for ordering information
*Indicates factory selected value

Table 6-3. Replaceable Parts

Reference Designation	HP Part Number	C D	Qty	Description	Mfr Code	Mfr Part Number
A2				CONTROLLER ASSEMBLY		
A2A1	08673-60003	4	1	PANEL DRIVER BOARD ASSEMBLY	28480	08673-60003
A2A1C1	0180-1746	5	7	CAPACITOR-FXD 15UF+-10% 20VDC TA	56289	150D156X9020B2
A2A1C2	0160-4389	6	2	CAPACITOR-FXD 100PF +-5PF 200VDC CER	28480	0160-4389
A2A1C3	0180-1746	5		CAPACITOR-FXD 15UF+-10% 20VDC TA	56289	150D156X9020B2
A2A1C4	0160-4389	6		CAPACITOR-FXD 100PF +-5PF 200VDC CER	28480	0160-4389
A2A1C5	0180-1746	5		CAPACITOR-FXD 15UF+-10% 20VDC TA	56289	150D156X9020B2
A2A1C6	0180-1746	5		CAPACITOR-FXD 15UF+-10% 20VDC TA	56289	150D156X9020B2
A2A1C7	0180-1746	5		CAPACITOR-FXD 15UF+-10% 20VDC TA	56289	150D156X9020B2
A2A1C8	0180-1746	5		CAPACITOR-FXD 15UF+-10% 20VDC TA	56289	150D156X9020B2
A2A1C9	0180-1746	5		CAPACITOR-FXD 15UF+-10% 20VDC TA	56289	150D156X9020B2
A2A1CR1	1901-0050	3	14	DIODE-SWITCHING 80V 200MA 2NS DO-35	28480	1901-0050
A2A1CR2	1901-0050	3		DIODE-SWITCHING 80V 200MA 2NS DO-35	28480	1901-0050
A2A1CR3	1901-0050	3		DIODE-SWITCHING 80V 200MA 2NS DO-35	28480	1901-0050
A2A1L1	9100-3922	4	7	INDUCTOR-FIXED 120-1300 HZ	28480	9100-3922
A2A1MP1	1480-0073	6	14	PIN-ROLL .062-IN-DIA .25-IN-LG BE-CU	28480	1480-0073
A2A1MP2	4040-0748	3	6	EXTR-PC BD BLK POLYC .062-BD-THKNS	28480	4040-0748
A2A1MP3	4040-0749	4	4	EXTR-PC BD BRN POLYC .062-BD-THKNS	28480	4040-0749
A2A1R1	0698-3132	4	29	RESISTOR 261 1% .125W F TC=0+-100	24546	C4-1/8-T0-2610-F
A2A1R2	0698-3132	4		RESISTOR 261 1% .125W F TC=0+-100	24546	C4-1/8-T0-2610-F
A2A1R3	0698-3136	8	3	RESISTOR 17.8K 1% .125W F TC=0+-100	24546	C4-1/8-T0-1782-F
A2A1R4	0698-3132	4		RESISTOR 261 1% .125W F TC=0+-100	24546	C4-1/8-T0-2610-F
A2A1R5	0698-3132	4		RESISTOR 261 1% .125W F TC=0+-100	24546	C4-1/8-T0-2610-F
A2A1R6	0698-3132	4		RESISTOR 261 1% .125W F TC=0+-100	24546	C4-1/8-T0-2610-F
A2A1R7	0698-3132	4		RESISTOR 261 1% .125W F TC=0+-100	24546	C4-1/8-T0-2610-F
A2A1R8	0698-3132	4		RESISTOR 261 1% .125W F TC=0+-100	24546	C4-1/8-T0-2610-F
A2A1R9	0698-3132	4		RESISTOR 261 1% .125W F TC=0+-100	24546	C4-1/8-T0-2610-F
A2A1R10	0698-3132	4		RESISTOR 261 1% .125W F TC=0+-100	24546	C4-1/8-T0-2610-F
A2A1R11	0698-3132	4		RESISTOR 261 1% .125W F TC=0+-100	24546	C4-1/8-T0-2610-F
A2A1R12	0698-3132	4		RESISTOR 261 1% .125W F TC=0+-100	24546	C4-1/8-T0-2610-F
A2A1R13	0698-3132	4		RESISTOR 261 1% .125W F TC=0+-100	24546	C4-1/8-T0-2610-F
A2A1R14	0698-3132	4		RESISTOR 261 1% .125W F TC=0+-100	24546	C4-1/8-T0-2610-F
A2A1R15	0698-3132	4		RESISTOR 261 1% .125W F TC=0+-100	24546	C4-1/8-T0-2610-F
A2A1R16	0698-3132	4		RESISTOR 261 1% .125W F TC=0+-100	24546	C4-1/8-T0-2610-F
A2A1R17	0698-3132	4		RESISTOR 261 1% .125W F TC=0+-100	24546	C4-1/8-T0-2610-F
A2A1R18	0698-3132	4		RESISTOR 261 1% .125W F TC=0+-100	24546	C4-1/8-T0-2610-F
A2A1R19	0698-3132	4		RESISTOR 261 1% .125W F TC=0+-100	24546	C4-1/8-T0-2610-F
A2A1R20	0698-3132	4		RESISTOR 261 1% .125W F TC=0+-100	24546	C4-1/8-T0-2610-F
A2A1R21	0698-3132	4		RESISTOR 261 1% .125W F TC=0+-100	24546	C4-1/8-T0-2610-F
A2A1R22	0698-3132	4		RESISTOR 261 1% .125W F TC=0+-100	24546	C4-1/8-T0-2610-F
A2A1R23	0698-3132	4		RESISTOR 261 1% .125W F TC=0+-100	24546	C4-1/8-T0-2610-F
A2A1R24	0698-3132	4		RESISTOR 261 1% .125W F TC=0+-100	24546	C4-1/8-T0-2610-F
A2A1R25	0698-3132	4		RESISTOR 261 1% .125W F TC=0+-100	24546	C4-1/8-T0-2610-F
A2A1R26	0698-3438	3	2	RESISTOR 147 1% .125W F TC=0+-100	24546	C4-1/8-T0-147R-F
A2A1R27	0698-3438	3		RESISTOR 147 1% .125W F TC=0+-100	24546	C4-1/8-T0-147R-F
A2A1R28	0698-3132	4		RESISTOR 261 1% .125W F TC=0+-100	24546	C4-1/8-T0-2610-F
A2A1R29	0698-3132	4		RESISTOR 261 1% .125W F TC=0+-100	24546	C4-1/8-T0-2610-F
A2A1R30	0698-3132	4		RESISTOR 261 1% .125W F TC=0+-100	24546	C4-1/8-T0-2610-F
A2A1R31	0698-3132	4		RESISTOR 261 1% .125W F TC=0+-100	24546	C4-1/8-T0-2610-F
A2A1R32	0698-3159	5	2	RESISTOR 26.1K 1% .125W F TC=0+-100	24546	C4-1/8-T0-2612-F
A2A1R33	0698-3136	8		RESISTOR 17.8K 1% .125W F TC=0+-100	24546	C4-1/8-T0-1782-F
A2A1R34	0698-3159	5		RESISTOR 26.1K 1% .125W F TC=0+-100	24546	C4-1/8-T0-2612-F
A2A1R35	0698-3136	8		RESISTOR 17.8K 1% .125W F TC=0+-100	24546	C4-1/8-T0-1782-F
A2A1R36	0698-3132	4		RESISTOR 261 1% .125W F TC=0+-100	24546	C4-1/8-T0-2610-F
A2A1U1	1820-1202	7	5	IC GATE TTL LS NAND TPL 3-INP	01295	SN74LS10N
A2A1U2	1820-1423	4	2	IC MV TTL LS MONOSTBL RETRIG DUAL	01295	SN74LS123N
A2A1U3	1820-1201	6	5	IC GATE TTL LS AND QUAD 2-INP	01295	SN74LS08N
A2A1U4	1820-1423	4		IC MV TTL LS MONOSTBL RETRIG DUAL	01295	SN74LS123N
A2A1U5	1820-1858	9	14	IC FF TTL LS D-TYPE OCTL	01295	SN74LS377N
A2A1U6	1820-1858	9		IC FF TTL LS D-TYPE OCTL	01295	SN74LS377N
A2A1U7	1820-1858	9		IC FF TTL LS D-TYPE OCTL	01295	SN74LS377N
A2A1U8	1820-1858	9		IC FF TTL LS D-TYPE OCTL	01295	SN74LS377N
A2A1U9	1820-1858	9		IC FF TTL LS D-TYPE OCTL	01295	SN74LS377N
A2A1U10	1820-1858	9		IC FF TTL LS D-TYPE OCTL	01295	SN74LS377N
A2A1U11	1820-1858	9		IC FF TTL LS D-TYPE OCTL	01295	SN74LS377N
A2A1U12	1820-1740	8	2	IC DRVR TTL DSPL DRVR	27014	DS8863N
A2A1U13	1820-1740	8		IC DRVR TTL DSPL DRVR	27014	DS8863N
A2A1U14	1820-1216	3	11	IC DCDR TTL LS 3-TO-8-LINE 3-INP	01295	SN74LS138N
A2A1U15	1820-1216	3		IC DCDR TTL LS 3-TO-8-LINE 3-INP	01295	SN74LS138N

See introduction to this section for ordering information
*Indicates factory selected value

Table 6-3. Replaceable Parts

Reference Designation	HP Part Number	C D	Qty	Description	Mfr Code	Mfr Part Number
A2A2	08673-60004	5	1	KEY CODE BOARD ASSEMBLY	28480	08673-60004
A2A2C1	0180-0197	8	20	CAPACITOR-FXD 2.2UF+-10% 20VDC TA	56289	150D225X9020A2
A2A2C2	0180-0197	8		CAPACITOR-FXD 2.2UF+-10% 20VDC TA	56289	150D225X9020A2
A2A2C3	0180-0197	8		CAPACITOR-FXD 2.2UF+-10% 20VDC TA	56289	150D225X9020A2
A2A2C4	0180-0197	8		CAPACITOR-FXD 2.2UF+-10% 20VDC TA	56289	150D225X9020A2
A2A2C5	0160-3456	6		CAPACITOR-FXD 1000PF +-10% 1KVDC CER	28480	0160-3456
A2A2CR1	1901-0040	1	3	DIODE-SWITCHING 30V 50MA 2NS DO-35	28480	1901-0040
A2A2CR2	1901-0040	1		DIODE-SWITCHING 30V 50MA 2NS DO-35	28480	1901-0040
A2A2DS1	1990-0678	8	7	LED-LAMP LUM-INT=800UCD IF=30MA-MAX	28480	1990-0678
A2A2DS2	1990-0678	8		LED-LAMP LUM-INT=800UCD IF=30MA-MAX	28480	1990-0678
A2A2DS3	1990-0678	8		LED-LAMP LUM-INT=800UCD IF=30MA-MAX	28480	1990-0678
A2A2DS4	1990-0678	8		LED-LAMP LUM-INT=800UCD IF=30MA-MAX	28480	1990-0678
A2A2DS5	1990-0678	8		LED-LAMP LUM-INT=800UCD IF=30MA-MAX	28480	1990-0678
A2A2DS6	1990-0678	8		LED-LAMP LUM-INT=800UCD IF=30MA-MAX	28480	1990-0678
A2A2DS7	1990-0678	8		LED-LAMP LUM-INT=800UCD IF=30MA-MAX	28480	1990-0678
A2A2L1	9100-3922	4		INDUCTOR-FIXED 120-1300 HZ	28400	9100-3922
A2A2MP1	1480-0073	6		PIN-ROLL .062-IN-DIA .25-IN-LG BE-CU	28480	1480-0073
A2A2MP2	4040-0748	3		EXTR-PC BD BLK POLYC .062-BD-THKNS	28480	4040-0748
A2A2MP3	4040-0750	7	1	EXTR-PC BD RED POLYC .062-BD-THKNS	28480	4040-0750
A2A2R1	1810-0280	8	4	NETWORK-RES 10-SIP10.0K OHM X 9	01121	210A103
A2A2R2	1810-0280	8		NETWORK-RES 10-SIP10.0K OHM X 9	01121	210A103
A2A2R3	1810-0280	8		NETWORK-RES 10-SIP10.0K OHM X 9	01121	210A103
A2A2R4	0757-0442	9	17	RESISTOR 10K 1% .125W F TC=0+-100	24546	C4-1/8-T0-1002-F
A2A2R5	0757-0442	9		RESISTOR 10K 1% .125W F TC=0+-100	24546	C4-1/8-T0-1002-F
A2A2R6	0757-0401	0		RESISTOR 100 1% .125W F TC=0+-100	24546	C4-1/8-T0-101-F
A2A2R7	0757-0442	9		RESISTOR 10K 1% .125W F TC=0+-100	24546	C4-1/8-T0-1002-F
A2A2R8	1810-0339	8	1	NETWORK-RES 8-SIP270.0 OHM X 7	01121	208A271
A2A2S1	3101-2170	8	1	SWITCH-PB SPDT MOM	28480	3101-2170
A2A2U1	1820-1201	6		IC GATE TTL LS AND QUAD 2-INP	01295	SN74LS08N
A2A2U2	1820-1422	3	4	IC MV TTL LS MONOSTBL RETRIG	01295	SN74LS122N
A2A2U3	1820-1199	1	6	IC INV TTL LS HEX 1-INP	01295	SN74LS04N
A2A2U4	1820-1199	1		IC INV TTL LS HEX 1-INP	01295	SN74LS04N
A2A2U5	1820-1201	6		IC GATE TTL LS AND QUAD 2-INP	01295	SN74LS08N
A2A2U6	1820-1195	7	2	IC FF TTL LS D-TYPE POS-EDGE-TRIG COM	01295	SN74LS175N
A2A2U7	1820-1112	8	5	IC FF TTL LS D-TYPE POS-EDGE-TRIG	01295	SN74LS74AN
A2A2U8	1820-1197	9	9	IC GATE TTL LS NAND QUAD 2-INP	01295	SN74LS00N
A2A2U9	1820-1112	8		IC FF TTL LS D-TYPE POS-EDGE-TRIG	01295	SN74LS74AN
A2A2U10	1820-1197	9		IC GATE TTL LS NAND QUAD 2-INP	01295	SN74LS00N
A2A2U11	1820-1202	7		IC GATE TTL LS NAND TPL 3-INP	01295	SN74LS10N
A2A2U12	1820-1851	2	4	IC ENCDR TTL LS	01295	SN74LS148N
A2A2U13	1820-1851	2		IC ENCDR TTL LS	01295	SN74LS148N
A2A2U14	1820-1851	2		IC ENCDR TTL LS	01295	SN74LS148N
A2A2W1	8159-0005	0	1	RESISTOR-ZERO OHMS 22 AWG LEAD DIA	28480	8159-0005
A2A3	08672-60143	2	1	VCO ASSEMBLY- 160-240 MHZ	28480	08672-60143
A2A3C1	0160-3456	6		CAPACITOR-FXD 1000PF +-10% 1KVDC CER	28480	0160-3456
A2A3C2	0160-0166	9	5	CAPACITOR-FXD .068UF +-10% 200VDC POLYE	28480	0160-0166
A2A3C3	0160-3879	7	4	CAPACITOR-FXD .01UF +-20% 100VDC CER	28480	0160-3879
A2A3C4	0180-0116	1	5	CAPACITOR-FXD 6.8UF+-10% 35VDC TA	56289	150D685X9035B2
A2A3C5	0160-3879	7		CAPACITOR-FXD .01UF +-20% 100VDC CER	28480	0160-3879
A2A3C6	0160-2259	5	1	CAPACITOR-FXD 12PF +-5% 500VDC CER 0+-30	28480	0160-2259
A2A3C7	0160-0301	4	2	CAPACITOR-FXD .012UF +-10% 200VDC POLYE	28480	0160-0301
A2A3C8	0160-0166	9		CAPACITOR-FXD .068UF +-10% 200VDC POLYE	28480	0160-0166
A2A3C9	0160-3456	6		CAPACITOR-FXD 1000PF +-10% 1KVDC CER	28480	0160-3456
A2A3C10	0160-3456	6		CAPACITOR-FXD 1000PF +-10% 1KVDC CER	28480	0160-3456
A2A3C11	0160-0301	4		CAPACITOR-FXD .012UF +-10% 200VDC POLYE	28480	0160-0301
A2A3C12*	0160-3456	6	18	CAPACITOR-FXD 1000PF +-10% 1KVDC CER	28480	0160-3456
A2A3C13	0180-2211	1	1	CAPACITOR-FXD 5UF+50-10% 150VDC AL	56289	30D505F150CC2
A2A3C14	0180-2214	4	1	CAPACITOR-FXD 90UF+75-10% 16VDC AL	56289	30D906G016CC2
A2A3C15	0160-0166	9		CAPACITOR-FXD .068UF +-10% 200VDC POLYE	28480	0160-0166
A2A3C16	0160-3456	6		CAPACITOR-FXD 1000PF +-10% 1KVDC CER	28480	0160-3456
A2A3C17	0160-3456	6		CAPACITOR-FXD 1000PF +-10% 1KVDC CER	28480	0160-3456
A2A3C18	0160-3466	8	3	CAPACITOR-FXD 100PF +-10% 1KVDC CER	28480	0160-3466
A2A3C19	0160-3456	6		CAPACITOR-FXD 1000PF +-10% 1KVDC CER	28480	0160-3456
A2A3C20	0160-3456	6		CAPACITOR-FXD 1000PF +-10% 1KVDC CER	28480	0160-3456
A2A3C21	0160-3456	6		CAPACITOR-FXD 1000PF +-10% 1KVDC CER	28480	0160-3456
A2A3C22	0160-3456	6		CAPACITOR-FXD 1000PF +-10% 1KVDC CER	28480	0160-3456
A2A3C23	0160-3456	6		CAPACITOR-FXD 1000PF +-10% 1KVDC CER	28480	0160-3456
A2A3C24	0160-3456	6		CAPACITOR-FXD 1000PF +-10% 1KVDC CER	28480	0160-3456
A2A3C25	0160-3456	6		CAPACITOR-FXD 1000PF +-10% 1KVDC CER	28480	0160-3456

See introduction to this section for ordering information
*Indicates factory selected value

Table 6-3. Replaceable Parts

Reference Designation	HP Part Number	C D	Qty	Description	Mfr Code	Mfr Part Number
A2A3C26	0160-3456	6		CAPACITOR-FXD 1000PF +-10% 1KVDC CER	28480	0160-3456
A2A3C27	0160-2240	4	1	CAPACITOR-FXD 2PF +-.25PF 500VDC CER	28480	0160-2240
A2A3C28	0160-2262	0	2	CAPACITOR-FXD 16PF +-5% 500VDC CER 0+-30	28480	0160-2262
A2A3C29	0160-2262	0		CAPACITOR-FXD 16PF +-5% 500VDC CER 0+-30	28480	0160-2262
A2A3C30	0160-3456	6		CAPACITOR-FXD 1000PF +-10% 1KVDC CER	28480	0160-3456
A2A3C31	0160-3456	6		CAPACITOR-FXD 1000PF +-10% 1KVDC CER	28480	0160-3456
A2A3C32	0140-0195	2	2	CAPACITOR-FXD 130PF +-5% 300VDC MICA	72136	DM15F131J0300WV1CR
A2A3C33	0140-0195	2		CAPACITOR-FXD 130PF +-5% 300VDC MICA	72136	DM15F131J0300WV1CR
A2A3CR1	0122-0085	1	4	DIODE-VVC 2.2PF 7% C3/C25-MIN=4.5	28480	0122-0085
A2A3CR2	0122-0085	1		DIODE-VVC 2.2PF 7% C3/C25-MIN=4.5	28480	0122-0085
A2A3CR3	0122-0085	1		DIODE-VVC 2.2PF 7% C3/C25-MIN=4.5	28480	0122-0085
A2A3CR4	0122-0085	1		DIODE-VVC 2.2PF 7% C3/C25-MIN=4.5	28480	0122-0085
A2A3J1	1250-0544	9	3	CONNECTOR-RF SM-SNP M SGL-HOLE-FR 50-OHM	28480	1250-0544
A2A3J2	1250-0544	9		CONNECTOR-RF SM-SNP M SGL-HOLE-FR 50-OHM	28480	1250-0544
A2A3L1	9140-0180	4	1	INDUCTOR RF-CH-MLD 2.7UH 10%	28480	9140-0180
A2A3L2	9100-2583	1	2	INDUCTOR RF-CH-MLD 6.8MH 10%	28480	9100-2583
A2A3L3	9100-2583	1		INDUCTOR RF-CH-MLD 6.8MH 10%	28480	9100-2583
A2A3L4	9100-2249	6	1	INDUCTOR RF-CH-MLD 150NH 10% .105DX.26LG	28480	9100-2249
A2A3L5	9100-0346	0	1	INDUCTOR RF-CH-MLD 50NH 20% .105DX.26LG	28480	9100-0346
A2A3L6	9100-2248	5	2	INDUCTOR RF-CH-MLD 120NH 10% .105DX.26LG	28480	9100-2248
A2A3L7	9100-2254	3	1	INDUCTOR RF-CH-MLD 390NH 10% .105DX.26LG	28480	9100-2254
A2A3L8	9100-2248	5		INDUCTOR RF-CH-MLD 120NH 10% .105DX.26LG	28480	9100-2248
A2A3MP1	86701-40001	9	3	EXTRACTOR-P.C. BOARD	28480	86701-40001
A2A3MP2	08672-20026	6	1	VCO COVER	28480	08672-20026
A2A3Q1	1855-0392	7	1	TRANSISTOR J-FET N-CHAN D-MODE TO-72 SI	28480	1855-0392
A2A3Q2	1854-0345	8	3	TRANSISTOR NPN 2N5179 SI TO-72 PD=200MW	04713	2N5179
A2A3Q3	1854-0345	8		TRANSISTOR NPN 2N5179 SI TO-72 PD=200MW	04713	2N5179
A2A3Q4	1854-0345	8		TRANSISTOR NPN 2N5179 SI TO-72 PD=200MW	04713	2N5179
A2A3Q5	1853-0020	4	1	TRANSISTOR PNP SI PD=300MW FT=150MHZ	28480	1853-0020
A2A3Q6	1853-0451	5	1	TRANSISTOR PNP 2N3799 SI TO-18 PD=360MW	01295	2N3799
A2A3R1	0757-0199	3	4	RESISTOR 21.5K 1% .125W F TC=0+-100	24546	C4-1/8-T0-2152-F
A2A3R2	0757-0442	9		RESISTOR 10K 1% .125W F TC=0+-100	24546	C4-1/8-T0-1002-F
A2A3R3	0698-3156	2	1	RESISTOR 14.7K 1% .125W F TC=0+-100	24546	C4-1/8-T0-1472-F
A2A3R4	0757-0834	3	1	RESISTOR 5.62K 1% .5W F TC=0+-100	28480	0757-0834
A2A3R5	0757-0279	0	17	RESISTOR 3.16K 1% .125W F TC=0+-100	24546	C4-1/8-T0-3161-F
A2A3R6	0757-0280	3	23	RESISTOR 1K 1% .125W F TC=0+-100	24546	C4-1/8-T0-1001-F
A2A3R7	0757-0279	0		RESISTOR 3.16K 1% .125W F TC=0+-100	24546	C4-1/8-T0-3161-F
A2A3R8	0757-0278	9	4	RESISTOR 1.78K 1% .125W F TC=0+-100	24546	C4-1/8-T0-1781-F
A2A3R9	0757-0346	2	4	RESISTOR 10 1% .125W F TC=0+-100	24546	C4-1/8-T0-10R0-F
A2A3R10	0757-0280	3		RESISTOR 1K 1% .125W F TC=0+-100	24546	C4-1/8-T0-1001-F
A2A3R11	0698-3444	1	8	RESISTOR 316 1% .125W F TC=0+-100	24546	C4-1/8-T0-316R-F
A2A3R12	0698-3444	1		RESISTOR 316 1% .125W F TC=0+-100	24546	C4-1/8-T0-316R-F
A2A3R13	0757-0346	2		RESISTOR 10 1% .125W F TC=0+-100	24546	C4-1/8-T0-10R0-F
A2A3R14	0757-0180	2	1	RESISTOR 31.6 1% .125W F TC=0+-100	28480	0757-0180
A2A3R15	0698-3444	1		RESISTOR 316 1% .125W F TC=0+-100	24546	C4-1/8-T0-316R-F
A2A3R16	0757-0278	9		RESISTOR 1.78K 1% .125W F TC=0+-100	24546	C4-1/8-T0-1781-F
A2A3R17	0757-0279	0		RESISTOR 3.16K 1% .125W F TC=0+-100	24546	C4-1/8-T0-3161-F
A2A3R18	0698-3440	7	2	RESISTOR 196 1% .125W F TC=0+-100	24546	C4-1/8-T0-196R-F
A2A3R19	0757-0428	1	1	RESISTOR 1.62K 1% .125W F TC=0+-100	24546	C4-1/8-T0-1621-F
A2A3R20	0698-3160	8	6	RESISTOR 31.6K 1% .125W F TC=0+-100	24546	C4-1/8-T0-3162-F
A2A3R21	0698-3452	1	1	RESISTOR 147K 1% .125W F TC=0+-100	24546	C4-1/8-T0-1473-F
A2A3R22	0757-0123	3	1	RESISTOR 34.8K 1% .125W F TC=0+-100	28480	0757-0123
A2A3R23	0757-0416	7	4	RESISTOR 511 1% .125W F TC=0+-100	24546	C4-1/8-T0-511R-F
A2A3R24	0698-3440	7		RESISTOR 196 1% .125W F TC=0+-100	24546	C4-1/8-T0-196R-F
A2A3R25	0698-3444	1		RESISTOR 316 1% .125W F TC=0+-100	24546	C4-1/8-T0-316R-F
A2A3R26	0757-0346	2		RESISTOR 10 1% .125W F TC=0+-100	24546	C4-1/8-T0-10R0-F
A2A3R27	0757-0278	9		RESISTOR 1.78K 1% .125W F TC=0+-100	24546	C4-1/8-T0-1781-F
A2A3R28	0757-0418	9	4	RESISTOR 619 1% .125W F TC=0+-100	24546	C4-1/8-T0-619R-F
A2A3R29	0757-0279	0		RESISTOR 3.16K 1% .125W F TC=0+-100	24546	C4-1/8-T0-3161-F
A2A3R30	0757-0418	9		RESISTOR 619 1% .125W F TC=0+-100	24546	C4-1/8-T0-619R-F
A2A3R31	0698-0083	8	7	RESISTOR 1.96K 1% .125W F TC=0+-100	24546	C4-1/8-T0-1961-F
A2A3R32	0698-0083	8		RESISTOR 1.96K 1% .125W F TC=0+-100	24546	C4-1/8-T0-1961-F
A2A3R33	0698-3444	1		RESISTOR 316 1% .125W F TC=0+-100	24546	C4-1/8-T0-316R-F
A2A3R34*	0757-0401	0	7	RESISTOR 100 1% .125W F TC=0+-100	24546	C4-1/8-T0-101-F
A2A3S1	3101-1524	4	1	SWITCH-SL DP3T SUBMIN .5A 125VAC/DC PC	28480	3101-1524
A2A3T1	08672-80003	5	1	COIL-INDUCTOR	28480	08672-80003
A2A3U1	1820-1225	4	1	IC FF ECL D-M/S DUAL	04713	MC10231P
A2A3U2	1820-0794	0	1	IC FF ECL D-M/S	04713	MC1670L
A2A4	08672-60144	3	1	PHASE DETECTOR ASSEMBLY- 20/30	28480	08672-60144

See introduction to this section for ordering information
*Indicates factory selected value

Table 6-3. Replaceable Parts

Reference Designation	HP Part Number	C D	Qty	Description	Mfr Code	Mfr Part Number
A2A4C1	0180-0116	1		CAPACITOR-FXD 6.8UF+-10% 35VDC TA	56289	150D685X9035B2
A2A4C2	0160-0162	5	2	CAPACITOR-FXD .022UF +-10% 200VDC POLYE	28480	0160-0162
A2A4C3	0180-0197	8		CAPACITOR-FXD 2.2UF+-10% 20VDC TA	56289	150D225X9020A2
A2A4C4	0180-0141	2	1	CAPACITOR-FXD 50UF+75-10% 50VDC AL	56289	30D506G050DD2
A2A4C5	0160-3459	9	4	CAPACITOR-FXD .02UF +-20% 100VDC CER	28480	0160-3459
A2A4C6	0180-0197	8		CAPACITOR-FXD 2.2UF+-10% 20VDC TA	56289	150D225X9020A2
A2A4C7	0160-0161	4	2	CAPACITOR-FXD .01UF +-10% 200VDC POLYE	28480	0160-0161
A2A4C8	0160-0161	4		CAPACITOR-FXD .01UF +-10% 200VDC POLYE	28480	0160-0161
A2A4C9	0160-2290	4	2	CAPACITOR-FXD .15UF +-10% 80VDC POLYE	28480	0160-2290
A2A4C10	0160-2205	1	1	CAPACITOR-FXD 120PF +-5% 300VDC MICA	28480	0160-2205
A2A4C11	0160-3459	9		CAPACITOR-FXD .02UF +-20% 100VDC CER	28480	0160-3459
A2A4C12	0160-2290	4		CAPACITOR-FXD .15UF +-10% 80VDC POLYE	28480	0160-2290
A2A4C13	0160-2207	3	1	CAPACITOR-FXD 300PF +-5% 300VDC MICA	28480	0160-2207
A2A4C14	0160-3459	9		CAPACITOR-FXD .02UF +-20% 100VDC CER	28480	0160-3459
A2A4C15	0160-3456	6		CAPACITOR-FXD 1000PF +-10% 1KVDC CER	28480	0160-3456
A2A4C16	0160-2055	9	15	CAPACITOR-FXD .01UF +80-20% 100VDC CER	28480	0160-2055
A2A4C17	0160-3459	9		CAPACITOR-FXD .02UF +-20% 100VDC CER	28480	0160-3459
A2A4C18	0170-0040	9	2	CAPACITOR-FXD .047UF +-10% 200VDC POLYE	56289	292P47392
A2A4C19	0160-0166	9		CAPACITOR-FXD .068UF +-10% 200VDC POLYE	28480	0160-0166
A2A4C20	0160-3661	5	2	CAPACITOR-FXD .1UF +-5% 50VDC MET-POLYC	28480	0160-3661
A2A4C21	0160-0166	9		CAPACITOR-FXD .068UF +-10% 200VDC POLYE	28480	0160-0166
A2A4C22	0160-3661	5		CAPACITOR-FXD .1UF +-5% 50VDC MET-POLYC	28480	0160-3661
A2A4CR1	1901-0535	9	4	DIODE-SM SIG SCHOTTKY	28480	1901-0535
A2A4CR2	1901-0535	9		DIODE-SM SIG SCHOTTKY	28480	1901-0535
A2A4CR3	1901-0535	9		DIODE-SM SIG SCHOTTKY	28480	1901-0535
A2A4CR4	1901-0535	9		DIODE-SM SIG SCHOTTKY	28480	1901-0535
A2A4L1	9100-1629	4	2	INDUCTOR RF-CH-MLD 47UH 5% .166DX.385LG	28480	9100-1629
A2A4L2	9100-1629	4		INDUCTOR RF-CH-MLD 47UH 5% .166DX.385LG	28480	9100-1629
A2A4L3	08672-80002	4	2	INDUCTOR- 3.8 MH	28480	08672-80002
A2A4L4	08672-80002	4		INDUCTOR- 3.8 MH	28480	08672-80002
A2A4MP1	1205-0250	9	3	THERMAL LINK SGL TO-5/TO-39-CS	28480	1205-0250
A2A4MP2	08672-20027	7	1	COVER-PHASE DETECTOR	28480	08672-20027
A2A4MP3	86701-40001	9		EXTRACTOR-P.C. BOARD	28480	86701-40001
A2A4Q1	1854-0075	1	1	TRANSISTOR NPN SI TO-39 PD=200MW	28480	1854-0075
A2A4Q2	1854-0071	7	3	TRANSISTOR NPN SI PD=300MW FT=200MHZ	28480	1854-0071
A2A4R1	0757-0280	3		RESISTOR 1K 1% .125W F TC=0+-100	24546	C4-1/8-T0-1001-F
A2A4R2	0698-3629	4	1	RESISTOR 270 5% 2W MO TC=0+-200	28480	0698-3629
A2A4R3	0757-1094	9	1	RESISTOR 1.47K 1% .125W F TC=0+-100	24546	C4-1/8-T0-1471-F
A2A4R4	0757-0200	3		RESISTOR 1K 1% .125W F TC=0+-100	24546	C4-1/8-T0-1001-F
A2A4R5	0757-0280	3		RESISTOR 1K 1% .125W F TC=0+-100	24546	C4-1/8-T0-1001-F
A2A4R6	0757-0280	3		RESISTOR 1K 1% .125W F TC=0+-100	24546	C4-1/8-T0-1001-F
A2A4R7	0757-0280	3		RESISTOR 1K 1% .125W F TC=0+-100	24546	C4-1/8-T0-1001-F
A2A4R8	0757-0440	7	2	RESISTOR 7.5K 1% .125W F TC=0+-100	24546	C4-1/8-T0-7501-F
A2A4R9	0757-0280	3		RESISTOR 1K 1% .125W F TC=0+-100	24546	C4-1/8-T0-1001-F
A2A4R10	0757-0438	3	17	RESISTOR 5.11K 1% .125W F TC=0+-100	24546	C4-1/8-T0-5111-F
A2A4R11	0757-0440	7		RESISTOR 7.5K 1% .125W F TC=0+-100	24546	C4-1/8-T0-7501-F
A2A4R12	0757-0422	5	4	RESISTOR 909 1% .125W F TC=0+-100	24546	C4-1/8-T0-909R-F
A2A4R13	0757-0422	5		RESISTOR 909 1% .125W F TC=0+-100	24546	C4-1/8-T0-909R-F
A2A4R14	0757-0438	3		RESISTOR 5.11K 1% .125W F TC=0+-100	24546	C4-1/8-T0-5111-F
A2A4R15	0698-3160	8		RESISTOR 31.6K 1% .125W F TC=0+-100	24546	C4-1/8-T0-3162-F
A2A4R16	0757-0438	3		RESISTOR 5.11K 1% .125W F TC=0+-100	24546	C4-1/8-T0-5111-F
A2A4R17	0757-0462	3	2	RESISTOR 75K 1% .125W F TC=0+-100	24546	C4-1/8-T0-7502-F
A2A4R18	0757-0458	7	6	RESISTOR 51.1K 1% .125W F TC=0+-100	24546	C4-1/8-T0-5112-F
A2A4R19	0757-0462	3		RESISTOR 75K 1% .125W F TC=0+-100	24546	C4-1/8-T0-7502-F
A2A4R20	0757-0438	3		RESISTOR 5.11K 1% .125W F TC=0+-100	24546	C4-1/8-T0-5111-F
A2A4R21	0757-0401	0		RESISTOR 100 1% .125W F TC=0+-100	24546	C4-1/8-T0-101-F
A2A4R22	0757-0280	3		RESISTOR 1K 1% .125W F TC=0+-100	24546	C4-1/8-T0-1001-F
A2A4R23*	0757-0819	4	1	RESISTOR 909 1% .5W F TC=0+-100	28480	0757-0819
A2A4R24	0757-0280	3		RESISTOR 1K 1% .125W F TC=0+-100	24546	C4-1/8-T0-1001-F
A2A4R25	0757-0424	7	1	RESISTOR 1.1K 1% .125W F TC=0+-100	24546	C4-1/8-T0-1101-F
A2A4R26	0698-3443	0	1	RESISTOR 287 1% .125W F TC=0+-100	24546	C4-1/8-T0-287R-F
A2A4R27	0698-3153	9	1	RESISTOR 3.83K 1% .125W F TC=0+-100	24546	C4-1/8-T0-3831-F
A2A4R28	0757-0346	2		RESISTOR 10 1% .125W F TC=0+-100	24546	C4-1/8-T0-10R0-F
A2A4R29	0757-0200	7	1	RESISTOR 5.62K 1% .125W F TC=0+-100	24546	C4-1/8-T0-5621-F
A2A4R30	0757-0422	5		RESISTOR 909 1% .125W F TC=0+-100	24546	C4-1/8-T0-909R-F
A2A4R31	0757-0278	9		RESISTOR 1.78K 1% .125W F TC=0+-100	24546	C4-1/8-T0-1781-F
A2A4TP1	1251-0600	0		CONNECTOR-SGL CONT PIN 1.14-MM-BSC-SZ SQ	28480	1251-0600
A2A4TP2	1251-0600	0		CONNECTOR-SGL CONT PIN 1.14-MM-BSC-SZ SQ	28480	1251-0600
A2A4TP3	1251-0600	0		CONNECTOR-SGL CONT PIN 1.14-MM-BSC-SZ SQ	28480	1251-0600
A2A4TP4	1251-0600	0		CONNECTOR-SGL CONT PIN 1.14-MM-BSC-SZ SQ	28480	1251-0600
A2A4U1	1820-0429	8	2	IC V RGLTR TO-39	18324	LM309H
A2A4U2	1820-1197	9		IC GATE TTL LS NAND QUAD 2-INP	01295	SN74LS00N
A2A4U3	1820-0281	0	1	IC FF TTL J-K M/S PULSE CLEAR DUAL	01295	SN74107N
A2A4U4	1820-0846	3	1	IC BFR TTL NON-INV QUAD 1-INP	27014	DM8094N
A2A4U5*	1826-0392	6	1	IC OP AMP GP TO-99 PKG	34335	AM301AH

See introduction to this section for ordering information
*Indicates factory selected value

Table 6-3. Replaceable Parts

Reference Designation	HP Part Number	C D	Qty	Description	Mfr Code	Mfr Part Number
A2A4U6	1820-1422	3		IC MV TTL LS MONOSTBL RETRIG	01295	SN74LS122N
A2A4U7	1820-1422	3		IC MV TTL LS MONOSTBL RETRIG	01295	SN74LS122N
A2A4U8	1820-1112	8		IC FF TTL LS D-TYPE POS-EDGE-TRIG	01295	SN74LS74AN
A2A4VR1	1902-3234	3	1	DIODE-ZNR 19.6V 5% DO-35 PD=.4W	28480	1902-3234
A2A5	08672-60145	4	1	DIVIDER ASSEMBLY- 20/30	28480	08672-60145
A2A5C1	0160-2055	9		CAPACITOR-FXD .01UF +80-20% 100VDC CER	28480	0160-2055
A2A5C2	0180-0229	7	4	CAPACITOR-FXD 33UF+-10% 10VDC TA	56289	150D336X9010B2
A2A5C3	0180-0229	7		CAPACITOR-FXD 33UF+-10% 10VDC TA	56289	150D336X9010B2
A2A5C4	0180-2205	3	1	CAPACITOR-FXD .33UF+-10% 35VDC TA	56289	150D334X9035A2
A2A5C5	0160-3466	8		CAPACITOR-FXD 100PF +-10% 1KVDC CER	28480	0160-3466
A2A5C6	0160-2055	9		CAPACITOR-FXD .01UF +80-20% 100VDC CER	28480	0160-2055
A2A5C7	0180-0229	7		CAPACITOR-FXD 33UF+-10% 10VDC TA	56289	150D336X9010B2
A2A5C8	0180-0197	8		CAPACITOR-FXD 2.2UF+-10% 20VDC TA	56289	150D225X9020A2
A2A5C9	0160-2055	9		CAPACITOR-FXD .01UF +80-20% 100VDC CER	28480	0160-2055
A2A5C10	0160-2055	9		CAPACITOR-FXD .01UF +80-20% 100VDC CER	28480	0160-2055
A2A5C11	0160-2055	9		CAPACITOR-FXD .01UF +80-20% 100VDC CER	28480	0160-2055
A2A5C12	0160-2055	9		CAPACITOR-FXD .01UF +80-20% 100VDC CER	28480	0160-2055
A2A5C13	0160-2055	9		CAPACITOR-FXD .01UF +80-20% 100VDC CER	28480	0160-2055
A2A5C14	0160-2055	9		CAPACITOR-FXD .01UF +80-20% 100VDC CER	28480	0160-2055
A2A5C15	0160-2055	9		CAPACITOR-FXD .01UF +80-20% 100VDC CER	28480	0160-2055
A2A5C16	0160-2055	9		CAPACITOR-FXD .01UF +80-20% 100VDC CER	28480	0160-2055
A2A5C17	0160-2055	9		CAPACITOR-FXD .01UF +80-20% 100VDC CER	28480	0160-2055
A2A5C18	0160-2055	9		CAPACITOR-FXD .01UF +80-20% 100VDC CER	28480	0160-2055
A2A5C19	0160-3537	4	1	CAPACITOR-FXD 680PF +-5% 100VDC MICA	28480	0160-3537
A2A5C20	0180-0229	7		CAPACITOR-FXD 33UF+-10% 10VDC TA	56289	150D336X9010B2
A2A5CR1	1901-0040	1		DIODE-SWITCHING 30V 50MA 2NS DO-35	28480	1901-0040
A2A5J1	1250-0544	9		CONNECTOR-RF SM-SNP M SGL-HOLE-FR 50-OHM	28480	1250-0544
A2A5L1*	9100-4078	3	2	INDUCTOR 650H 54%	28480	9100-4078
A2A5L2	9100-1618	1	1	INDUCTOR RF-CH-MLD 5.6UH 10%	28480	9100-1618
A2A5L3	9100-4078	3		INDUCTOR 650H 54%	28480	9100-4078
A2A5MP1	1205-0250	9		THERMAL LINK SGL TO-5/TO-39-CS	28480	1205-0250
A2A5MP2	08672-20028	8	1	COVER-DIVIDER	28480	08672-20028
A2A5MP3	86701-40001	9		EXTRACTOR-P.C. BOARD	28480	86701-40001
A2A5MP4	3050-0079	3	14	WASHER-FL NM NO. 2 .094-IN-ID .188-IN-OD	28480	3050-0079
A2A5MP5	10534-4001	2	8	TACK-RUBBER	28480	10534-4001
A2A5Q4	1854-0019	3	2	TRANSISTOR NPN SI TO-18 PD=360MW	28480	1854-0019
A2A5R1	0698-3628	3	1	RESISTOR 220 5% 2W MO TC=0+-200	28480	0698-3628
A2A5R2	0757-0397	3	1	RESISTOR 68.1 1% .125W F TC=0+-100	24546	C4-1/8-T0-68R1-F
A2A5R3	0698-3444	1		RESISTOR 316 1% .125W F TC=0+-100	24546	C4-1/8-T0-316R-F
A2A5R4	2100-2413	9	1	RESISTOR-TRMR 200 10% C SIDE-ADJ 1-TRN	30983	ET50X201
A2A5R5	0698-7216	3	16	RESISTOR 147 1% .05W F TC=0+-100	24546	C3-1/8-TO-147R-F
A2A5R6	0698-7216	3		RESISTOR 147 1% .05W F TC=0+-100	24546	C3-1/8-TO-147R-F
A2A5R7	0698-7216	3		RESISTOR 147 1% .05W F TC=0+-100	24546	C3-1/8-TO-147R-F
A2A5R8	0698-7216	3		RESISTOR 147 1% .05W F TC=0+-100	24546	C3-1/8-TO-147R-F
A2A5R9	0757-0280	3		RESISTOR 1K 1% .125W F TC=0+-100	24546	C4-1/8-T0-1001-F
A2A5R10	0757-0280	3		RESISTOR 1K 1% .125W F TC=0+-100	24546	C4-1/8-T0-1001-F
A2A5R11	0757-0438	3		RESISTOR 5.11K 1% .125W F TC=0+-100	24546	C4-1/8-T0-5111-F
A2A5R12	0698-3150	6	1	RESISTOR 2.37K 1% .125W F TC=0+-100	24546	C4-1/8-T0-2371-F
A2A5R13	0757-0438	3		RESISTOR 5.11K 1% .125W F TC=0+-100	24546	C4-1/8-T0-5111-F
A2A5R14	0757-0280	3		RESISTOR 1K 1% .125W F TC=0+-100	24546	C4-1/8-T0-1001-F
A2A5R15	0698-3444	1		RESISTOR 316 1% .125W F TC=0+-100	24546	C4-1/8-T0-316R-F
A2A5R16	0698-7216	3		RESISTOR 147 1% .05W F TC=0+-100	24546	C3-1/8-TO-147R-F
A2A5R17	0698-7216	3		RESISTOR 147 1% .05W F TC=0+-100	24546	C3-1/8-TO-147R-F
A2A5R18	0698-7216	3		RESISTOR 147 1% .05W F TC=0+-100	24546	C3-1/8-TO-147R-F
A2A5R19	0698-7216	3		RESISTOR 147 1% .05W F TC=0+-100	24546	C3-1/8-TO-147R-F
A2A5R20	0698-3157	3	1	RESISTOR 19.6K 1% .125W F TC=0+-100	24546	C4-1/8-T0-1962-F
A2A5R21	0757-0280	3		RESISTOR 1K 1% .125W F TC=0+-100	24546	C4-1/8-T0-1001-F
A2A5R22	0757-0280	3		RESISTOR 1K 1% .125W F TC=0+-100	24546	C4-1/8-T0-1001-F
A2A5R23	0757-0280	3		RESISTOR 1K 1% .125W F TC=0+-100	24546	C4-1/8-T0-1001-F
A2A5R24	0698-7216	3		RESISTOR 147 1% .05W F TC=0+-100	24546	C3-1/8-TO-147R-F
A2A5R25	0698-7216	3		RESISTOR 147 1% .05W F TC=0+-100	24546	C3-1/8-TO-147R-F
A2A5R26	0698-7216	3		RESISTOR 147 1% .05W F TC=0+-100	24546	C3-1/8-TO-147R-F
A2A5R27	0698-7216	3		RESISTOR 147 1% .05W F TC=0+-100	24546	C3-1/8-TO-147R-F
A2A5R28	0757-0280	3		RESISTOR 1K 1% .125W F TC=0+-100	24546	C4-1/8-T0-1001-F
A2A5R29	0757-0422	5		RESISTOR 909 1% .125W F TC=0+-100	24546	C4-1/8-T0-909R-F
A2A5R30	0757-0418	9		RESISTOR 619 1% .125W F TC=0+-100	24546	C4-1/8-T0-619R-F
A2A5R31	0757-0418	9		RESISTOR 619 1% .125W F TC=0+-100	24546	C4-1/8-T0-619R-F
A2A5R32	0757-0280	3		RESISTOR 1K 1% .125W F TC=0+-100	24546	C4-1/8-T0-1001-F
A2A5R33	0757-0280	3		RESISTOR 1K 1% .125W F TC=0+-100	24546	C4-1/8-T0-1001-F
A2A5R34	0698-7216	3		RESISTOR 147 1% .05W F TC=0+-100	24546	C3-1/8-TO-147R-F
A2A5R35	0698-7216	3		RESISTOR 147 1% .05W F TC=0+-100	24546	C3-1/8-TO-147R-F

See introduction to this section for ordering information
*Indicates factory selected value

Table 6-3. Replaceable Parts

Reference Designation	HP Part Number	C D	Qty	Description	Mfr Code	Mfr Part Number
A2A5R36	0698-7216	3		RESISTOR 147 1% .05W F TC=0+-100	24546	C3-1/8-TO-147R-F
A2A5R37	0698-7216	3		RESISTOR 147 1% .05W F TC=0+-100	24546	C3-1/8-TO-147R-F
A2A5TP1	1251-0600	0		CONNECTOR-SGL CONT PIN 1.14-MM-BSC-SZ SQ	28480	1251-0600
A2A5TP2	1251-0600	0		CONNECTOR-SGL CONT PIN 1.14-MM-BSC-SZ SQ	28480	1251-0600
A2A5TP3	1251-0600	0		CONNECTOR-SGL CONT PIN 1.14-MM-BSC-SZ SQ	28480	1251-0600
A2A5TP4	1251-0600	0		CONNECTOR-SGL CONT PIN 1.14-MM-BSC-SZ SQ	28480	1251-0600
A2A5TP5	1251-0600	0		CONNECTOR-SGL CONT PIN 1.14-MM-BSC-SZ SQ	28480	1251-0600
A2A5TP6	1251-0600	0		CONNECTOR-SGL CONT PIN 1.14-MM-BSC-SZ SQ	28480	1251-0600
A2A5U1	1820-1251	6	5	IC CNTR TTL LS DECD ASYNCHRO	01295	SN74LS196N
A2A5U2	1820-1251	6		IC CNTR TTL LS DECD ASYNCHRO	01295	SN74LS196N
A2A5U3	1820-1251	6		IC CNTR TTL LS DECD ASYNCHRO	01295	SN74LS196N
A2A5U4	1820-0261	6	1	IC MV TTL MONOSTBL	01295	SN74121N
A2A5U5	1820-0686	9	1	IC GATE TTL S AND TPL 3-INP	01295	SN74S11N
A2A5U6	1820-0629	0	2	IC FF TTL S J-K NEG-EDGE-TRIG	01295	SN74S112N
A2A5U7	1820-0629	0		IC FF TTL S J-K NEG-EDGE-TRIG	01295	SN74S112N
A2A5U8	1820-1384	6	1	IC PRESCR ECL	52648	SP8641B
A2A5U9	1820-0429	8		IC V RGLTR TO-39	18324	LM309H
A2A5U10	1820-1251	6		IC CNTR TTL LS DECD ASYNCHRO	01295	SN74LS196N
A2A5U11	1820-1251	6		IC CNTR TTL LS DECD ASYNCHRO	01295	SN74LS196N
A2A5U12	1820-0909	9	1	IC MULTR TTL	01295	SN74167N
A2A5U13	1820-0751	9	2	IC CNTR TTL DECD NEG-EDGE-TRIG PRESET	01295	SN74196N
A2A5U14	1820-0751	9		IC CNTR TTL DECD NEG-EDGE-TRIG PRESET	01295	SN74196N
A2A5U15	1820-0685	8	1	IC GATE TTL S NAND TPL 3-INP	01295	SN74S10N
A2A5U16	1820-0690	5	1	IC BFR TTL S NAND DUAL 4-INP	01295	SN74S40N
A2A6				NOT ASSIGNED		
A2A7	08673-60005	6	1	I/O BOARD ASSEMBLY	28480	08673-60005
A2A7C1	0180-2620	6	12	CAPACITOR-FXD 2.2UF+-10% 50VDC TA	25088	D2R2GS1B50K
A2A7C2	0180-2620	6		CAPACITOR-FXD 2.2UF+-10% 50VDC TA	25088	D2R2GS1B50K
A2A7C3	0160-0572	1	3	CAPACITOR-FXD 2200PF +-20% 100VDC CER	28480	0160-0572
A2A7C4	0180-2620	6		CAPACITOR-FXD 2.2UF+-10% 50VDC TA	25088	D2R2GS1B50K
A2A7C5	0180-2620	6		CAPACITOR-FXD 2.2UF+-10% 50VDC TA	25088	D2R2GS1B50K
A2A7C6	0180-2620	6		CAPACITOR-FXD 2.2UF+-10% 50VDC TA	25088	D2R2GS1B50K
A2A7C7	0180-2620	6		CAPACITOR-FXD 2.2UF+-10% 50VDC TA	25088	D2R2GS1B50K
A2A7C8	0160-0576	5	1	CAPACITOR-FXD .1UF +-20% 50VDC CER	28480	0160-0576
A2A7C9	0180-2620	6		CAPACITOR-FXD 2.2UF+-10% 50VDC TA	25088	D2R2GS1B50K
A2A7C10	0180-2620	6		CAPACITOR-FXD 2.2UF+-10% 50VDC TA	25088	D2R2GS1B50K
A2A7C11	0180-2620	6		CAPACITOR-FXD 2.2UF+-10% 50VDC TA	25088	D2R2GS1B50K
A2A7C12	0160-0174	9	1	CAPACITOR-FXD .47UF +80-20% 25VDC CER	28480	0160-0174
A2A7C13	0180-2620	6		CAPACITOR-FXD 2.2UF+-10% 50VDC TA	25088	D2R2GS1B50K
A2A7C14	0180-2620	6		CAPACITOR-FXD 2.2UF+-10% 50VDC TA	25088	D2R2GS1B50K
A2A7C15	0180-2620	6		CAPACITOR-FXD 2.2UF+-10% 50VDC TA	25088	D2R2GS1B50K
A2A7C16	0160-0572	1		CAPACITOR-FXD 2200PF +-20% 100VDC CER	28480	0160-0572
A2A7C17	0160-0572	1		CAPACITOR-FXD 2200PF +-20% 100VDC CER	28480	0160-0572
A2A7C18	0160-0153	4	1	CAPACITOR-FXD 1000PF +-10% 200VDC POLYE	28480	0160-0153
A2A7C19	0160-4103	2	2	CAPACITOR-FXD 220PF +-5% 100VDC CER	72982	8121-M100-COG-221J
A2A7C20	0160-0162	5		CAPACITOR-FXD .022UF +-10% 200VDC POLYE	28480	0160-0162
A2A7C21	0170-0040	9		CAPACITOR-FXD .047UF +-10% 200VDC POLYE	56289	292P47392
A2A7C22	0160-4103	2		CAPACITOR-FXD 220PF +-5% 100VDC CER	72982	8121-M100-COG-221J
A2A7CR1	1901-0050	3		DIODE-SWITCHING 80V 200MA 2NS DO-35	28480	1901-0050
A2A7CR2	1901-0050	3		DIODE-SWITCHING 80V 200MA 2NS DO-35	28480	1901-0050
A2A7CR3	1901-0050	3		DIODE-SWITCHING 80V 200MA 2NS DO-35	28480	1901-0050
A2A7CR4	1901-0050	3		DIODE-SWITCHING 80V 200MA 2NS DO-35	28480	1901-0050
A2A7CR5	1901-0050	3		DIODE-SWITCHING 80V 200MA 2NS DO-35	28480	1901-0050
A2A7CR6	1901-0050	3		DIODE-SWITCHING 80V 200MA 2NS DO-35	28480	1901-0050
A2A7CR7	1901-0050	3		DIODE-SWITCHING 80V 200MA 2NS DO-35	28480	1901-0050
A2A7CR8	1901-0050	3		DIODE-SWITCHING 80V 200MA 2NS DO-35	28480	1901-0050
A2A7CR9	1901-0050	3		DIODE-SWITCHING 80V 200MA 2NS DO-35	28480	1901-0050
A2A7CR10	1901-0050	3		DIODE-SWITCHING 80V 200MA 2NS DO-35	28480	1901-0050
A2A7CR11	1901-0050	3		DIODE-SWITCHING 80V 200MA 2NS DO-35	28480	1901-0050
A2A7DS1	1990-0670	0	4	LED-LAMP LUM-INT=1MCD IF=20MA-MAX BVR=5V	28480	1990-0670
A2A7DS2	1990-0670	0		LED-LAMP LUM-INT=1MCD IF=20MA-MAX BVR=5V	28480	1990-0670
A2A7DS3	1990-0670	0		LED-LAMP LUM-INT=1MCD IF=20MA-MAX BVR=5V	28480	1990-0670
A2A7DS4	1990-0670	0		LED-LAMP LUM-INT=1MCD IF=20MA-MAX BVR=5V	28480	1990-0670
A2A7L1	9100-3922	4		INDUCTOR-FIXED 120-1300 HZ	28480	9100-3922
A2A7MP1	1480-0073	6		PIN-ROLL .062-IN-DIA .25-IN-LG BE-CU	28480	1480-0073
A2A7MP2	4040-0748	3		EXTR-PC BD BLK POLYC .062-BD-THKNS	28480	4040-0748
A2A7MP3	4040-0755	2	1	EXTR-PC BD VIO POLYC .062-BD-THKNS	28480	4040-0755
A2A7Q1	1853-0281	9	5	TRANSISTOR PNP 2N2907A SI TO-18 PD=400MW	04713	2N2907A
A2A7Q2	1853-0281	9		TRANSISTOR PNP 2N2907A SI TO-18 PD=400MW	04713	2N2907A
A2A7Q3	1853-0281	9		TRANSISTOR PNP 2N2907A SI TO-18 PD=400MW	04713	2N2907A
A2A7Q4	1853-0281	9		TRANSISTOR PNP 2N2907A SI TO-18 PD=400MW	04713	2N2907A
A2A7Q5	1853-0281	9		TRANSISTOR PNP 2N2907A SI TO-18 PD=400MW	04713	2N2907A

See introduction to this section for ordering information
*Indicates factory selected value

Table 6-3. Replaceable Parts

Reference Designation	HP Part Number	C D	Qty	Description	Mfr Code	Mfr Part Number
A2A7Q6	1854-0477	7	2	TRANSISTOR NPN 2N2222A SI TO-18 PD=500MW	04713	2N2222A
A2A7Q7	1854-0477	7		TRANSISTOR NPN 2N2222A SI TO-18 PD=500MW	04713	2N2222A
A2A7Q8	1853-0314	9	1	TRANSISTOR PNP 2N2905A SI TO-39 PD=600MW	04713	2N2905A
A2A7R1	0757-0465	6	5	RESISTOR 100K 1% .125W F TC=0+-100	24546	C4-1/8-T0-1003-F
A2A7R2	0757-0438	3		RESISTOR 5.11K 1% .125W F TC=0+-100	24546	C4-1/8-T0-5111-F
A2A7R3	0757-0438	3		RESISTOR 5.11K 1% .125W F TC=0+-100	24546	C4-1/8-T0-5111-F
A2A7R4	0698-0083	8		RESISTOR 1.96K 1% .125W F TC=0+-100	24546	C4-1/8-T0-1961-F
A2A7R5	0757-0438	3		RESISTOR 5.11K 1% .125W F TC=0+-100	24546	C4-1/8-T0-5111-F
A2A7R6	0698-3160	8		RESISTOR 31.6K 1% .125W F TC=0+-100	24546	C4-1/8-T0-3162-F
A2A7R7	0757-0438	3		RESISTOR 5.11K 1% .125W F TC=0+-100	24546	C4-1/8-T0-5111-F
A2A7R8	0757-0458	7		RESISTOR 51.1K 1% .125W F TC=0+-100	24546	C4-1/8-T0-5112-F
A2A7R9	0698-3442	9	4	RESISTOR 237 1% .125W F TC=0+-100	24546	C4-1/8-T0-237R-F
A2A7R10	0757-0279	0		RESISTOR 3.16K 1% .125W F TC=0+-100	24546	C4-1/8-T0-3161-F
A2A7R11	0698-3160	8		RESISTOR 31.6K 1% .125W F TC=0+-100	24546	C4-1/8-T0-3162-F
A2A7R12	0757-0442	9		RESISTOR 10K 1% .125W F TC=0+-100	24546	C4-1/8-T0-1002-F
A2A7R13	0757-0438	3		RESISTOR 5.11K 1% .125W F TC=0+-100	24546	C4-1/8-T0-5111-F
A2A7R14	0757-0458	7		RESISTOR 51.1K 1% .125W F TC=0+-100	24546	C4-1/8-T0-5112-F
A2A7R15	0698-3442	9		RESISTOR 237 1% .125W F TC=0+-100	24546	C4-1/8-T0-237R-F
A2A7R16	0757-0458	7		RESISTOR 51.1K 1% .125W F TC=0+-100	24546	C4-1/8-T0-5112-F
A2A7R17	0698-3160	8		RESISTOR 31.6K 1% .125W F TC=0+-100	24546	C4-1/8-T0-3162-F
A2A7R18	0757-0442	9		RESISTOR 10K 1% .125W F TC=0+-100	24546	C4-1/8-T0-1002-F
A2A7R19	0757-0438	3		RESISTOR 5.11K 1% .125W F TC=0+-100	24546	C4-1/8-T0-5111-F
A2A7R20	0698-3442	9		RESISTOR 237 1% .125W F TC=0+-100	24546	C4-1/8-T0-237R-F
A2A7R21	0698-3160	8		RESISTOR 31.6K 1% .125W F TC=0+-100	24546	C4-1/8-T0-3162-F
A2A7R22	0757-0438	3		RESISTOR 5.11K 1% .125W F TC=0+-100	24546	C4-1/8-T0-5111-F
A2A7R23	0698-3442	9		RESISTOR 237 1% .125W F TC=0+-100	24546	C4-1/8-T0-237R-F
A2A7R24	0757-0438	3		RESISTOR 5.11K 1% .125W F TC=0+-100	24546	C4-1/8-T0-5111-F
A2A7R25	0757-0159	5	1	RESISTOR 1K 1% .5W F TC=0+-100	28480	0757-0159
A2A7R26	0698-0083	8		RESISTOR 1.96K 1% .125W F TC=0+-100	24546	C4-1/8-T0-1961-F
A2A7R27	0757-0438	3		RESISTOR 5.11K 1% .125W F TC=0+-100	24546	C4-1/8-T0-5111-F
A2A7R28	0757-0199	3		RESISTOR 21.5K 1% .125W F TC=0+-100	24546	C4-1/8-T0-2152-F
A2A7R29	0757-0438	3		RESISTOR 5.11K 1% .125W F TC=0+-100	24546	C4-1/8-T0-5111-F
A2A7R30	0757-0438	3		RESISTOR 5.11K 1% .125W F TC=0+-100	24546	C4-1/8-T0-5111-F
A2A7R31	0698-0083	8		RESISTOR 1.96K 1% .125W F TC=0+-100	24546	C4-1/8-T0-1961-F
A2A7R32	0698-0083	8		RESISTOR 1.96K 1% .125W F TC=0+-100	24546	C4-1/8-T0-1961-F
A2A7R33	1810-0280	8		NETWORK-RES 10-SIP10.0K OHM X 9	01121	210A103
A2A7R34	2100-3353	8	2	RESISTOR-TRMR 20K 10% C SIDE-ADJ 1-TRN	28480	2100-3353
A2A7R35	0757-0442	9		RESISTOR 10K 1% .125W F TC=0+-100	24546	C4-1/8-T0-1002-F
A2A7R36	0698-0083	8		RESISTOR 1.96K 1% .125W F TC=0+-100	24546	C4-1/8-T0-1961-F
A2A7R37	0757-0279	0		RESISTOR 3.16K 1% .125W F TC=0+-100	24546	C4-1/8-T0-3161-F
A2A7R38	0757-0274	5	3	RESISTOR 1.21K 1% .125W F TC=0+-100	24546	C4-1/8-T0-1211-F
A2A7R39	0757-0279	0		RESISTOR 3.16K 1% .125W F TC=0+-100	24546	C4-1/8-T0-3161-F
A2A7R40	0757-0442	9		RESISTOR 10K 1% .125W F TC=0+-100	24546	C4-1/8-T0-1002-F
A2A7R41	0757-0401	0		RESISTOR 100 1% .125W F TC=0+-100	24546	C4-1/8-T0-101-F
A2A7R42	0698-3161	9	1	RESISTOR 38.3K 1% .125W F TC=0+-100	24546	C4-1/8-T0-3832-F
A2A7R43	0757-0279	0		RESISTOR 3.16K 1% .125W F TC=0+-100	24546	C4-1/8-T0-3161-F
A2A7R44	0757-0401	0		RESISTOR 100 1% .125W F TC=0+-100	24546	C4-1/8-T0-101-F
A2A7R45	0757-0465	6		RESISTOR 100K 1% .125W F TC=0+-100	24546	C4-1/8-T0-1003-F
A2A7R46	0757-0442	9		RESISTOR 10K 1% .125W F TC=0+-100	24546	C4-1/8-T0-1002-F
A2A7R47	0757-0465	6		RESISTOR 100K 1% .125W F TC=0+-100	24546	C4-1/8-T0-1003-F
A2A7R48	0757-0401	0		RESISTOR 100 1% .125W F TC=0+-100	24546	C4-1/8-T0-101-F
A2A7R49	0757-0465	6		RESISTOR 100K 1% .125W F TC=0+-100	24546	C4-1/8-T0-1003-F
A2A7R50	2100-3353	8		RESISTOR-TRMR 20K 10% C SIDE-ADJ 1-TRN	28480	2100-3353
A2A7R51	0757-0442	9		RESISTOR 10K 1% .125W F TC=0+-100	24546	C4-1/8-T0-1002-F
A2A7R52	0757-0458	7		RESISTOR 51.1K 1% .125W F TC=0+-100	24546	C4-1/8-T0-5112-F
A2A7R53	0757-0465	6		RESISTOR 100K 1% .125W F TC=0+-100	24546	C4-1/8-T0-1003-F
A2A7R54	0757-0458	7		RESISTOR 51.1K 1% .125W F TC=0+-100	24546	C4-1/8-T0-5112-F
A2A7R55	0757-0401	0		RESISTOR 100 1% .125W F TC=0+-100	24546	C4-1/8-T0-101-F
A2A7R56	0757-0460	1	1	RESISTOR 61.9K 1% .125W F TC=0+-100	24546	C4-1/8-T0-6192-F
A2A7R57	0757-0274	5		RESISTOR 1.21K 1% .125W F TC=0+-100	24546	C4-1/8-T0-1211-F
A2A7R58	0757-0274	5		RESISTOR 1.21K 1% .125W F TC=0+-100	24546	C4-1/8-T0-1211-F
A2A7TP1	1251-0600	0		CONNECTOR-SGL CONT PIN 1.14-MM-BSC-SZ SQ	28480	1251-0600
A2A7TP2	1251-0600	0		CONNECTOR-SGL CONT PIN 1.14-MM-BSC-SZ SQ	28480	1251-0600
A2A7TP3	1251-0600	0		CONNECTOR-SGL CONT PIN 1.14-MM-BSC-SZ SQ	28480	1251-0600
A2A7TP4	1251-0600	0		CONNECTOR-SGL CONT PIN 1.14-MM-BSC-SZ SQ	28480	1251-0600
A2A7U1	1820-2079	8	1	IC GATE CMOS NOR DUAL 4-INP	04713	MC14002BCP
A2A7U2	1820-1202	7		IC GATE TTL LS NAND TPL 3-INP	01295	SN74LS10N
A2A7U3	1820-1422	3		IC MV TTL LS MONOSTBL RETRIG	01295	SN74LS122N
A2A7U4	1820-1197	9		IC GATE TTL LS NAND QUAD 2-INP	01295	SN74LS00N
A2A7U5	1820-1216	3		IC DCDR TTL LS 3-TO-8-LINE 3-INP	01295	SN74LS138N
A2A7U6	1820-0693	8	2	IC FF TTL S D-TYPE POS-EDGE-TRIG	01295	SN74S74N
A2A7U7	1820-1858	9		IC FF TTL LS D-TYPE OCTL	01295	SN74LS377N
A2A7U8	1826-0600	9	2	IC OP AMP LOW-BIAS-H-IMPD QUAD 14-DIP-P	01295	TL074ACN
A2A7U9	1820-1199	1		IC INV TTL LS HEX 1-INP	01295	SN74LS04N
A2A7U10	1820-1445	0	1	IC LCH TTL LS 4-BIT	01295	SN74LS375N

See introduction to this section for ordering information
*Indicates factory selected value

Table 6-3. Replaceable Parts

Reference Designation	HP Part Number	C D	Qty	Description	Mfr Code	Mfr Part Number
A2A7U11	1820-2081	2	1	IC NMOS	04713	MC68A21P
A2A7U12	1820-1759	9	20	IC BFR TTL LS NON-INV OCTL	27014	DM81LS97N
A2A7U13	1820-1759	9		IC BFR TTL LS NON-INV OCTL	27014	DM81LS97N
A2A7U14	1826-0462	1	1	IC CONV 10-B-D/A 16-DIP-C PKG	04713	MC3410CL
A2A7U15	1820-0693	8		IC FF TTL S D-TYPE POS-EDGE-TRIG	01295	SN74S74N
A2A7U16	1820-1195	7		IC FF TTL LS D-TYPE POS-EDGE-TRIG COM	01295	SN74LS175N
A2A7U17	1820-1747	5	2	IC GATE CMOS NAND QUAD 2-INP	04713	MC14011BCP
A2A7U18	1826-0600	9		IC OP AMP LOW-BIAS-H-IMPD QUAD 14-DIP-P	01295	TL074ACN
A2A7U19	1820-1419	8	1	IC COMPTR TTL LS MAGTD 4-BIT	01295	SN74LS85N
A2A7U20	1820-1759	9		IC BFR TTL LS NON-INV OCTL	27014	DM81LS97N
A2A7U21	1820-1858	9		IC FF TTL LS D-TYPE OCTL	01295	SN74LS377N
A2A7U22	1820-1858	9		IC FF TTL LS D-TYPE OCTL	01295	SN74LS377N
A2A7U23	1826-0026	3	1	IC COMPARATOR PRCN TO-99 PKG	01295	LM311L
A2A7U24	1820-1285	6	1	IC GATE TTL LS AND-OR-INV 4-INP	01295	SN74LS54N
A2A7U25	1820-1199	1		IC INV TTL LS HEX 1-INP	01295	SN74LS04N
A2A7U26	1820-1759	9		IC BFR TTL LS NON-INV OCTL	27014	DM81LS97N
A2A7VR1	1902-0962	8	1	DIODE-ZNR 15V 5% DO-35 PD=.4W TC=+.087%	28480	1902-0962
A2A7VR2	1902-0950	4	1	DIODE-ZNR 4.7V 5% DO-35 PD=.4W TC=+.025%	28480	1902-0950
A2A7XU11	1200-0654	7	3	SOCKET-IC 40-CONT DIP DIP-SLDR	28480	1200-0654
A2A8	08673-60009	0	1	MICROPROCESSOR BOARD ASSEMBLY	28480	08673-60009
A2A8C1	0160-2055	9		CAPACITOR-FXD .01UF +80-20% 100VDC CER	28480	0160-2055
A2A8C2	0180-0197	8		CAPACITOR-FXD 2.2UF+-10% 20VDC TA	56289	150D225X9020A2
A2A8C3	0180-0197	8		CAPACITOR-FXD 2.2UF+-10% 20VDC TA	56289	150D225X9020A2
A2A8C4	0180-0197	8		CAPACITOR-FXD 2.2UF+-10% 20VDC TA	56289	150D225X9020A2
A2A8C5	0180-0197	8		CAPACITOR-FXD 2.2UF+-10% 20VDC TA	56289	150D225X9020A2
A2A8C6	0180-0197	8		CAPACITOR-FXD 2.2UF+-10% 20VDC TA	56289	150D225X9020A2
A2A8C7	0180-0197	8		CAPACITOR-FXD 2.2UF+-10% 20VDC TA	56289	150D225X9020A2
A2A8C8	0180-0197	8		CAPACITOR-FXD 2.2UF+-10% 20VDC TA	56289	150D225X9020A2
A2A8C9	0160-2255	1	1	CAPACITOR-FXD 8.2PF +-.25PF 500VDC CER	28480	0160-2255
A2A8C10	0160-3466	8		CAPACITOR-FXD 100PF +-10% 1KVDC CER	28480	0160-3466
A2A8C11	0180-0197	8		CAPACITOR-FXD 2.2UF+-10% 20VDC TA	56289	150D225X9020A2
A2A8C12	0160-2055	9		CAPACITOR-FXD .01UF +80-20% 100VDC CER	28480	0160-2055
A2A8CR1	1901-0028	5	1	DIODE-PWR RECT 400V 750MA DO-29	28480	1901-0028
A2A8L1	9100-3922	4		INDUCTOR-FIXED 120-1300 HZ	28480	9100-3922
A2A8L2	9140-0179	1	1	INDUCTOR RF-CH-MLD 22UH 10% .166DX.385LG	28480	9140-0179
A2A8MP1	1480-0073	6		PIN-ROLL .062-IN-DIA .25-IN-LG BE-CU	28480	1480-0073
A2A8MP2	4040-0747	2	1	EXTR-PC BD GRA POLYC .062-BD-THKNS	28480	4040-0747
A2A8MP3	4040-0748	3		EXTR-PC BD BLK POLYC .062-BD-THKNS	28480	4040-0748
A2A8Q1	1853-0393	4	1	TRANSISTOR PNP SI TO-18 PD=500MW	28480	1853-0393
A2A8Q2	1854-0019	3		TRANSISTOR NPN SI TO-18 PD=360MW	28480	1854-0019
A2A8R1	0757-0279	0		RESISTOR 3.16K 1% .125W F TC=0+-100	24546	C4-1/8-T0-3161-F
A2A8R2	0757-0279	0		RESISTOR 3.16K 1% .125W F TC=0+-100	24546	C4-1/8-T0-3161-F
A2A8R3	0757-0279	0		RESISTOR 3.16K 1% .125W F TC=0+-100	24546	C4-1/8-T0-3161-F
A2A8R4	0698-3444	1		RESISTOR 316 1% .125W F TC=0+-100	24546	C4-1/8-T0-316R-F
A2A8R5	0757-0279	0		RESISTOR 3.16K 1% .125W F TC=0+-100	24546	C4-1/8-T0-3161-F
A2A8R6	0757-0442	9		RESISTOR 10K 1% .125W F TC=0+-100	24546	C4-1/8-T0-1002-F
A2A8R7	0757-0442	9		RESISTOR 10K 1% .125W F TC=0+-100	24546	C4-1/8-T0-1002-F
A2A8R8	0757-0199	3		RESISTOR 21.5K 1% .125W F TC=0+-100	24546	C4-1/8-T0-2152-F
A2A8R9	0757-0416	7		RESISTOR 511 1% .125W F TC=0+-100	24546	C4-1/8-T0-511R-F
A2A8R10	0757-0280	3		RESISTOR 1K 1% .125W F TC=0+-100	24546	C4-1/8-T0-1001-F
A2A8R11	0757-0279	0		RESISTOR 3.16K 1% .125W F TC=0+-100	24546	C4-1/8-T0-3161-F
A2A8R12	0757-0279	0		RESISTOR 3.16K 1% .125W F TC=0+-100	24546	C4-1/8-T0-3161-F
A2A8R13	0757-0279	0		RESISTOR 3.16K 1% .125W F TC=0+-100	24546	C4-1/8-T0-3161-F
A2A8R14	0757-0199	3		RESISTOR 21.5K 1% .125W F TC=0+-100	24546	C4-1/8-T0-2152-F
A2A8R15	0757-0279	0		RESISTOR 3.16K 1% .125W F TC=0+-100	24546	C4-1/8-T0-3161-F
A2A8R16	0757-0279	0		RESISTOR 3.16K 1% .125W F TC=0+-100	24546	C4-1/8-T0-3161-F
A2A8R17	0757-0442	9		RESISTOR 10K 1% .125W F TC=0+-100	24546	C4-1/8-T0-1002-F
A2A8R18	0757-0280	3		RESISTOR 1K 1% .125W F TC=0+-100	24546	C4-1/8-T0-1001-F
A2A8R19	0757-0280	3		RESISTOR 1K 1% .125W F TC=0+-100	24546	C4-1/8-T0-1001-F
A2A8R20	0757-0280	3		RESISTOR 1K 1% .125W F TC=0+-100	24546	C4-1/8-T0-1001-F
A2A8R21	0757-0442	9		RESISTOR 10K 1% .125W F TC=0+-100	24546	C4-1/8-T0-1002-F
A2A8R22	1810-0275	1	7	NETWORK-RES 10-SIP1.0K OHM X 9	01121	210A102
A2A8S1	3100-3364	2	1	SWITCH-ROTARY 16 PIN DIP 4PDT	28480	3100-3364
A2A8TP1	1251-0600	0		CONNECTOR-SGL CONT PIN 1.14-MM-BSC-SZ SQ	28480	1251-0600
A2A8TP2	1251-0600	0		CONNECTOR-SGL CONT PIN 1.14-MM-BSC-SZ SQ	28480	1251-0600
A2A8TP2GND	1251-0600	0	24	CONNECTOR-SGL CONT PIN 1.14-MM-BSC-SZ SQ	28480	1251-0600
A2A8TP3	1251-0600	0		CONNECTOR-SGL CONT PIN 1.14-MM-BSC-SZ SQ	28480	1251-0600
A2A8TP4	1251-0600	0		CONNECTOR-SGL CONT PIN 1.14-MM-BSC-SZ SQ	28480	1251-0600

See introduction to this section for ordering information
*Indicates factory selected value

Table 6-3. Replaceable Parts

Reference Designation	HP Part Number	C D	Qty	Description	Mfr Code	Mfr Part Number
A2A8TP5	1251-0600	0		CONNECTOR-SGL CONT PIN 1.14-MM-BSC-SZ SQ	28480	1251-0600
A2A8TP5GND	1251-0600	0		CONNECTOR-SGL CONT PIN 1.14-MM-BSC-SZ SQ	28480	1251-0600
A2A8U1	1820-1112	8		IC FF TTL LS D-TYPE POS-EDGE-TRIG	01295	SN74LS74AN
A2A8U2	1820-1201	6		IC GATE TTL LS AND QUAD 2-INP	01295	SN74LS08N
A2A8U3	08673-80011	6	1	ROM-PROGRAMMED	28480	08673-80011
A2A8U4	1820-1201	6		IC GATE TTL LS AND QUAD 2-INP	01295	SN74LS08N
A2A8U5	1820-1144	6	1	IC GATE TTL LS NOR QUAD 2-INP	01295	SN74LS02N
A2A8U6	1820-2099	2	1	IC MICPROC NMOS 8-BIT	04713	MC6802P
A2A8U7	1820-1203	8	2	IC GATE TTL LS AND TPL 3-INP	01295	SN74LS11N
A2A8U8	1820-2469	0	1	IC-MICROPROCESSOR	28480	1820-2469
A2A8U9	1820-1759	9		IC BFR TTL LS NON-INV OCTL	27014	DM81LS97N
A2A8U10	1820-1112	8		IC FF TTL LS D-TYPE POS-EDGE-TRIG	01295	SN74LS74AN
A2A8U11	1820-1197	9		IC GATE TTL LS NAND QUAD 2-INP	01295	SN74LS00N
A2A8U12	1820-1197	9		IC GATE TTL LS NAND QUAD 2-INP	01295	SN74LS00N
A2A8U13	1820-1216	3		IC DCDR TTL LS 3-TO-8-LINE 3-INP	01295	SN74LS138N
A2A8U14	1820-1216	3		IC DCDR TTL LS 3-TO-8-LINE 3-INP	01295	SN74LS138N
A2A8U15	1820-1197	9		IC GATE TTL LS NAND QUAD 2-INP	01295	SN74LS00N
A2A8U16	1820-1202	7		IC GATE TTL LS NAND TPL 3-INP	01295	SN74LS10N
A2A8U17	1820-1199	1		IC INV TTL LS HEX 1-INP	01295	SN74LS04N
A2A8U18	1820-1932	0	1	IC MV CMOS MONOSTBL RETRIG/RESET DUAL	04713	MC14538BCP
A2A8U19	1820-1747	5		IC GATE CMOS NAND QUAD 2-INP	04713	MC14011BCP
A2A8U20	1820-1746	4	2	IC BFR CMOS INV HEX	04713	MC14049UBCP
A2A8U21	1820-1216	3		IC DCDR TTL LS 3-TO-8-LINE 3-INP	01295	SN74LS138N
A2A8U22	1820-1759	9		IC BFR TTL LS NON-INV OCTL	27014	DM81LS97N
A2A8U23	1820-1759	9		IC BFR TTL LS NON-INV OCTL	27014	DM81LS97N
A2A8U24	1820-1851	2		IC ENCDR TTL LS	01295	SN74LS148N
A2A8U25	1820-1759	9		IC BFR TTL LS NON-INV OCTL	27014	DM81LS97N
A2A8U26	1820-1759	9		IC BFR TTL LS NON-INV OCTL	27014	DM81LS97N
A2A8U27	1820-1759	9		IC BFR TTL LS NON-INV OCTL	27014	DM81LS97N
A2A8U28	1820-1202	7		IC GATE TTL LS NAND TPL 3-INP	01295	SN74LS10N
A2A8XU3	1200-0541	1	10	SOCKET-IC 24-CONT DIP DIP-SLDR	28480	1200-0541
A2A8XU6	1200-0654	7		SOCKET-IC 40-CONT DIP DIP-SLDR	28480	1200-0654
A2A9	08673-60006	7	1	FREQUENCY/HP-IB BOARD ASSEMBLY	28480	08673-60006
A2A9C1	0180-0116	1		CAPACITOR-FXD 6.8UF+-10% 35VDC TA	56289	150D685X9035B2
A2A9C2	0180-0116	1		CAPACITOR-FXD 6.8UF+-10% 35VDC TA	56289	150D685X9035B2
A2A9C3	0180-0116	1		CAPACITOR-FXD 6.8UF+-10% 35VDC TA	56289	150D685X9035B2
A2A9L1	9100-3922	4		INDUCTOR-FIXED 120-1300 HZ	28480	9100-3922
A2A9MP1	1480-0073	6		PIN-ROLL .062-IN-DIA .25-IN-LG BE-CU	28480	1480-0073
A2A9MP2	4040-0748	3		EXTR-PC BD BLK POLYC .062-BD-THKNS	28480	4040-0748
A2A9MP3	4040-0756	3	1	EXTR-PC BD WHT POLYC .062-BD-THKNS	28480	4040-0756
A2A9Q1	1854-0071	7		TRANSISTOR NPN SI PD=300MW FT=200MHZ	28480	1854-0071
A2A9Q2	1854-0071	7		TRANSISTOR NPN SI PD=300MW FT=200MHZ	28480	1854-0071
A2A9R1	1810-0275	1		NETWORK-RES 10-SIP1.0K OHM X 9	01121	210A102
A2A9R2	0757-0442	9		RESISTOR 10K 1% .125W F TC=0+-100	24546	C4-1/8-T0-1002-F
A2A9R3	0757-0442	9		RESISTOR 10K 1% .125W F TC=0+-100	24546	C4-1/8-T0-1002-F
A2A9R4	1810-0275	1		NETWORK-RES 10-SIP1.0K OHM X 9	01121	210A102
A2A9R5	0757-0416	7		RESISTOR 511 1% .125W F TC=0+-100	24546	C4-1/8-T0-511R-F
A2A9R6	0757-0416	7		RESISTOR 511 1% .125W F TC=0+-100	24546	C4-1/8-T0-511R-F
A2A9R7	0757-0442	9		RESISTOR 10K 1% .125W F TC=0+-100	24546	C4-1/8-T0-1002-F
A2A9S1	3101-1856	5	1	SWITCH-SL 8-1A DIP-SLIDE-ASSY .1A 50VDC	28480	3101-1856
A2A9TP1	1251-0600	0		CONNECTOR-SGL CONT PIN 1.14-MM-BSC-SZ SQ	28480	1251-0600
A2A9U1	1820-1955	7	5	IC ADDR CMOS FULL ADDER 4-BIT	3L585	CD4008BE
A2A9U2	1820-1955	7		IC ADDR CMOS FULL ADDER 4-BIT	3L585	CD4008BE
A2A9U3	1820-1955	7		IC ADDR CMOS FULL ADDER 4-BIT	3L585	CD4008BE
A2A9U4	1820-1955	7		IC ADDR CMOS FULL ADDER 4-BIT	3L585	CD4008BE
A2A9U5	1820-1955	7		IC ADDR CMOS FULL ADDER 4-BIT	3L585	CD4008BE
A2A9U6	1820-1208	3	1	IC GATE TTL LS OR QUAD 2-INP	01295	SN74LS32N
A2A9U7	1820-1197	9		IC GATE TTL LS NAND QUAD 2-INP	01295	SN74LS00N
A2A9U8	1820-1216	3		IC DCDR TTL LS 3-TO-8-LINE 3-INP	01295	SN74LS138N
A2A9U9	1820-1199	1		IC INV TTL LS HEX 1-INP	01295	SN74LS04N
A2A9U10	1820-2549	7	1	IC-8291A P HPIB	28480	1820-2549
A2A9U11	1820-2485	0	1	IC RCVR TTL LS BUS OCTL	01295	SN75160N
A2A9U12	1820-1746	4		IC BFR CMOS INV HEX	04713	MC14049UBCP
A2A9U13	1820-1976	2	2	IC BFR CMOS NON-INV HEX	3L585	CD4050BE
A2A9U14	1820-1976	2		IC BFR CMOS NON-INV HEX	3L585	CD4050BE
A2A9U15	1820-1858	9		IC FF TTL LS D-TYPE OCTL	01295	SN74LS377N
A2A9U16	1820-1858	9		IC FF TTL LS D-TYPE OCTL	01295	SN74LS377N
A2A9U17	1820-1858	9		IC FF TTL LS D-TYPE OCTL	01295	SN74LS377N
A2A9U18	1820-1858	9		IC FF TTL LS D-TYPE OCTL	01295	SN74LS377N
A2A9U19	1820-1759	9		IC BFR TTL LS NON-INV OCTL	27014	DM81LS97N
A2A9U20	1820-1759	9		IC BFR TTL LS NON-INV OCTL	27014	DM81LS97N

See introduction to this section for ordering information
*Indicates factory selected value

Table 6-3. Replaceable Parts

Reference Designation	HP Part Number	C D	Qty	Description	Mfr Code	Mfr Part Number
A2A9U21	1820-1759	9		IC BFR TTL LS NON-INV OCTL	27014	DM81LS97N
A2A9U22	1820-2483	8	1	IC RCVR TTL LS BUS OCTL	01295	SN75161N
A2A9XU10	1200-0654	7		SOCKET-IC 40-CONT DIP DIP-SLDR	28480	1200-0654
A2A10	08673-60008	9	1	RAM BOARD ASSEMBLY	28480	08673-60008
A2A10C1	0180-2617	1	9	CAPACITOR-FXD 6.8UF+-10% 35VDC TA	25088	D6R8GS1B35K
A2A10C2	0180-2617	1		CAPACITOR-FXD 6.8UF+-10% 35VDC TA	25088	D6R8GS1B35K
A2A10C3	0180-2617	1		CAPACITOR-FXD 6.8UF+-10% 35VDC TA	25088	D6R8GS1B35K
A2A10C4	0180-2617	1		CAPACITOR-FXD 6.8UF+-10% 35VDC TA	25088	D6R8GS1B35K
A2A10C5	0160-3457	7	1	CAPACITOR-FXD 2000PF +-10% 250VDC CER	28480	0160-3457
A2A10C6	0180-2617	1		CAPACITOR-FXD 6.8UF+-10% 35VDC TA	25088	D6R8GS1B35K
A2A10C7	0180-2617	1		CAPACITOR-FXD 6.8UF+-10% 35VDC TA	25088	D6R8GS1B35K
A2A10C8	0180-2617	1		CAPACITOR-FXD 6.8UF+-10% 35VDC TA	25088	D6R8GS1B35K
A2A10C9	0180-2617	1		CAPACITOR-FXD 6.8UF+-10% 35VDC TA	25088	D6R8GS1B35K
A2A10C10	0180-2617	1		CAPACITOR-FXD 6.8UF+-10% 35VDC TA	25088	D6R8GS1B35K
A2A10CR1	1901-0376	6	2	DIODE-GEN PRP 35V 50MA DO-35	28480	1901-0376
A2A10CR2	1901-0376	6		DIODE-GEN PRP 35V 50MA DO-35	28480	1901-0376
A2A10L1	9100-3922	4		INDUCTOR-FIXED 120-1300 HZ	28480	9100-3922
A2A10MP1	1480-0073	6		PIN-ROLL .062-IN-DIA .25-IN-LG BE-CU	28480	1480-0073
A2A10MP2	4040-0748	3		EXTR-PC BD BLK POLYC .062-BD-THKNS	28480	4040-0748
A2A10MP3	4040-0749	4		EXTR-PC BD BRN POLYC .062-BD-THKNS	28480	4040-0749
A2A10R1	0698-3459	8	1	RESISTOR 383K 1% .125W F TC=0+-100	28480	0698-3459
A2A10R2	1810-0275	1		NETWORK-RES 10-SIP1.0K OHM X 9	01121	210A102
A2A10R3	1810-0275	1		NETWORK-RES 10-SIP1.0K OHM X 9	01121	210A102
A2A10R4	1810-0275	1		NETWORK-RES 10-SIP1.0K OHM X 9	01121	210A102
A2A10S1	3101-2135	5	1	SWITCH-RKR DIP-RKR-ASSY DPDT .05A 30VDC	28480	3101-2135
A2A10U1	1818-0439	5	16	IC CMOS 1024 (1K) STAT RAM 300-NS 3-S	34371	HM1-6561B-9
A2A10U2	1818-0439	5		IC CMOS 1024 (1K) STAT RAM 300-NS 3-S	34371	HM1-6561B-9
A2A10U3	1818-0439	5		IC CMOS 1024 (1K) STAT RAM 300-NS 3-S	34371	HM1-6561B-9
A2A10U4	1818-0439	5		IC CMOS 1024 (1K) STAT RAM 300-NS 3-S	34371	HM1-6561B-9
A2A10U5	1818-0439	5		IC CMOS 1024 (1K) STAT RAM 300-NS 3-S	34371	HM1-6561B-9
A2A10U6	1818-0439	5		IC CMOS 1024 (1K) STAT RAM 300-NS 3-S	34371	HM1-6561B-9
A2A10U7	1818-0439	5		IC CMOS 1024 (1K) STAT RAM 300-NS 3-S	34371	HM1-6561B-9
A2A10U8	1818-0439	5		IC CMOS 1024 (1K) STAT RAM 300-NS 3-S	34371	HM1-6561B-9
A2A10U9	1820-1206	1	1	IC GATE TTL LS NOR TPL 3-INP	01295	SN74LS27N
A2A10U10	1820-1197	9		IC GATE TTL LS NAND QUAD 2-INP	01295	SN74LS00N
A2A10U11	1820-1730	6	1	IC FF TTL LS D-TYPE POS-EDGE-TRIG COM	01295	SN74LS273N
A2A10U12	1820-1759	9		IC BFR TTL LS NON-INV OCTL	27014	DM81LS97N
A2A10U13	08673-80001	4	1	ROM-PROGRAMMED	28480	08673-80001
A2A10U14	1818-0439	5		IC CMOS 1024 (1K) STAT RAM 300-NS 3-S	34371	HM1-6561B-9
A2A10U15	1818-0439	5		IC CMOS 1024 (1K) STAT RAM 300-NS 3-S	34371	HM1-6561B-9
A2A10U16	1818-0439	5		IC CMOS 1024 (1K) STAT RAM 300-NS 3-S	34371	HM1-6561B-9
A2A10U17	1818-0439	5		IC CMOS 1024 (1K) STAT RAM 300-NS 3-S	34371	HM1-6561B-9
A2A10U18	1818-0439	5		IC CMOS 1024 (1K) STAT RAM 300-NS 3-S	34371	HM1-6561B-9
A2A10U19	1818-0439	5		IC CMOS 1024 (1K) STAT RAM 300-NS 3-S	34371	HM1-6561B-9
A2A10U20	1818-0439	5		IC CMOS 1024 (1K) STAT RAM 300-NS 3-S	34371	HM1-6561B-9
A2A10U21	1818-0439	5		IC CMOS 1024 (1K) STAT RAM 300-NS 3-S	34371	HM1-6561B-9
A2A10U22	1820-1759	9		IC BFR TTL LS NON-INV OCTL	27014	DM81LS97N
A2A10U23	1820-1216	3		IC DCDR TTL LS 3-TO-8-LINE 3-INP	01295	SN74LS138N
A2A10U24	1820-1216	3		IC DCDR TTL LS 3-TO-8-LINE 3-INP	01295	SN74LS138N
A2A10U25	1820-1759	9		IC BFR TTL LS NON-INV OCTL	27014	DM81LS97N
A2A10U26	1820-1759	9		IC BFR TTL LS NON-INV OCTL	27014	DM81LS97N
A2A11	08673-60014	7	1	ROM BOARD ASSEMBLY	28480	08673-60014
A2A11C1	0180-0197	8		CAPACITOR-FXD 2.2UF+-10% 20VDC TA	56289	150D225X9020A2
A2A11C2	0180-0197	8		CAPACITOR-FXD 2.2UF+-10% 20VDC TA	56289	150D225X9020A2
A2A11C3	0180-0197	8		CAPACITOR-FXD 2.2UF+-10% 20VDC TA	56289	150D225X9020A2
A2A11C4	0180-0197	8		CAPACITOR-FXD 2.2UF+-10% 20VDC TA	56289	150D225X9020A2
A2A11C5	0180-0197	8		CAPACITOR-FXD 2.2UF+-10% 20VDC TA	56289	150D225X9020A2
A2A11L1	9100-3922	4		INDUCTOR-FIXED 120-1300 HZ	28480	9100-3922
A2A11MP1	1480-0073	6		PIN-ROLL .062-IN-DIA .25-IN-LG BE-CU	28480	1480-0073
A2A11MP2	4040-0749	4		EXTR-PC BD BRN POLYC .062-BD-THKNS	28480	4040-0749
A2A11R1	1810-0275	1		NETWORK-RES 10-SIP1.0K OHM X 9	01121	210A102
A2A11U1	08673-80002	5	2	ROM-PROGRAMMED	28480	08673-80002
A2A11U2	08673-80004	7	1	ROM-PROGRAMMED	28480	08673-80004
A2A11U3	08673-80005	8	1	ROM-PROGRAMMED	28480	08673-80005
A2A11U4	08673-80006	9	1	ROM-PROGRAMMED	28480	08673-80006
A2A11U5	08673-80007	0	1	ROM-PROGRAMMED	28480	08673-80007
A2A11U6	08673-80008	1	1	ROM-PROGRAMMED	28480	08673-80008
A2A11U7	08673-80009	2	1	ROM-PROGRAMMED	28480	08673-80009
A2A11U8	08673-80010	5	1	ROM-PROGRAMMED	28480	08673-80010
A2A11U9	08673-80002	5		ROM-PROGRAMMED	28480	08673-80002
A2A11U10	1820-1216	3		IC DCDR TTL LS 3-TO-8-LINE 3-INP	01295	SN74LS138N

See introduction to this section for ordering information
*Indicates factory selected value

Table 6-3. Replaceable Parts

Reference Designation	HP Part Number	C D	Qty	Description	Mfr Code	Mfr Part Number
A2A11U11	1820-1759	9		IC BFR TTL LS NON-INV OCTL	27014	DM81LS97N
A2A11U12	1820-1203	8		IC GATE TTL LS AND TPL 3-INP	01295	SN74LS11N
A2A11U13	1820-1759	9		IC BFR TTL LS NON-INV OCTL	27014	DM81LS97N
A2A11U14	1820-1216	3		IC DCDR TTL LS 3-TO-8-LINE 3-INP	01295	SN74LS138N
A2A11U15	1820-1759	9		IC BFR TTL LS NON-INV OCTL	27014	DM81LS97N
A2A11XU1	1200-0541	1		SOCKET-IC 24-CONT DIP DIP-SLDR	28480	1200-0541
A2A11XU2	1200-0541	1		SOCKET-IC 24-CONT DIP DIP-SLDR	28480	1200-0541
A2A11XU3	1200-0541	1		SOCKET-IC 24-CONT DIP DIP-SLDR	28480	1200-0541
A2A11XU4	1200-0541	1		SOCKET-IC 24-CONT DIP DIP-SLDR	28480	1200-0541
A2A11XU5	1200-0541	1		SOCKET-IC 24-CONT DIP DIP-SLDR	28480	1200-0541
A2A11XU6	1200-0541	1		SOCKET-IC 24-CONT DIP DIP-SLDR	28480	1200-0541
A2A11XU7	1200-0541	1		SOCKET-IC 24-CONT DIP DIP-SLDR	28480	1200-0541
A2A11XU8	1200-0541	1		SOCKET-IC 24-CONT DIP DIP-SLDR	28480	1200-0541
A2A11XU9	1200-0541	1		SOCKET-IC 24-CONT DIP DIP-SLDR	28480	1200-0541
A2A12				NOT ASSIGNED		
A2A13	08673-60002	3	1	MOTHERBOARD ASSEMBLY	28480	08673-60002
A2A13C1	0160-3879	7		CAPACITOR-FXD .01UF +-20% 100VDC CER	28480	0160-3879
A2A13C2	0160-3879	7		CAPACITOR-FXD .01UF +-20% 100VDC CER	28480	0160-3879
A2A13C3	0160-3877	5	16	CAPACITOR-FXD 100PF +-20% 200VDC CER	28480	0160-3877
A2A13C4	0160-3877	5		CAPACITOR-FXD 100PF +-20% 200VDC CER	28480	0160-3877
A2A13C5	0160-3877	5		CAPACITOR-FXD 100PF +-20% 200VDC CER	28480	0160-3877
A2A13C6	0160-3877	5		CAPACITOR-FXD 100PF +-20% 200VDC CER	28480	0160-3877
A2A13C7	0160-3877	5		CAPACITOR-FXD 100PF +-20% 200VDC CER	28480	0160-3877
A2A13C8	0160-3877	5		CAPACITOR-FXD 100PF +-20% 200VDC CER	28480	0160-3877
A2A13C9	0160-3877	5		CAPACITOR-FXD 100PF +-20% 200VDC CER	28480	0160-3877
A2A13C10	0160-3877	5		CAPACITOR-FXD 100PF +-20% 200VDC CER	28480	0160-3877
A2A13C11	0160-3877	5		CAPACITOR-FXD 100PF +-20% 200VDC CER	28480	0160-3877
A2A13C12	0160-3877	5		CAPACITOR-FXD 100PF +-20% 200VDC CER	28480	0160-3877
A2A13C13	0160-3877	5		CAPACITOR-FXD 100PF +-20% 200VDC CER	28480	0160-3877
A2A13C14	0160-3877	5		CAPACITOR-FXD 100PF +-20% 200VDC CER	28480	0160-3877
A2A13C15	0160-3877	5		CAPACITOR-FXD 100PF +-20% 200VDC CER	28480	0160-3877
A2A13C16	0160-3877	5		CAPACITOR-FXD 100PF +-20% 200VDC CER	28480	0160-3877
A2A13C17	0160-3877	5		CAPACITOR-FXD 100PF +-20% 200VDC CER	28480	0160-3877
A2A13C18	0160-3877	5		CAPACITOR-FXD 100PF +-20% 200VDC CER	28480	0160-3877
A2A13J1	1250-1255	1	2	CONNECTOR-RF SMB M PC 50-OHM	28480	1250-1255
A2A13J2	1251-5722	7	1	CONNECTOR 50-PIN M POST TYPE	28480	1251-5722
A2A13J3	1251-5721	6	1	CONNECTOR 40-PIN M POST TYPE	28480	1251-5721
A2A13J4	1251-3025	9	2	CONNECTOR 34-PIN M RECTANGULAR	28480	1251-3025
A2A13J5	1251-3109	0	1	CONNECTOR 20-PIN M RECTANGULAR	28480	1251-3109
A2A13MP1	0380-0817	3	2	SPACER-RVT-ON .095-IN-LG .152-IN-ID	00000	ORDER BY DESCRIPTION
A2A13MP2	1251-0600	0		CONNECTOR-SGL CONT PIN 1.14-MM-BSC-SZ SQ	28480	1251-0600
A2A13R1	0757-1000	7	1	RESISTOR 51.1 1% .5W F TC=0+-100	28480	0757-1000
A2A13W1	08673-20070	1	1	CABLE-SEMI RIGID	28480	08673-20070
A2A13XA1A	1251-2026	8	12	CONNECTOR-PC EDGE 18-CONT/ROW 2-ROWS	28480	1251-2026
A2A13XA1B	1251-2026	8		CONNECTOR-PC EDGE 18-CONT/ROW 2-ROWS	28480	1251-2026
A2A13XA2	1251-1365	6	1	CONNECTOR-PC EDGE 22-CONT/ROW 2-ROWS	28480	1251-1365
A2A13XA3	1251-2026	8		CONNECTOR-PC EDGE 18-CONT/ROW 2-ROWS	28480	1251-2026
A2A13XA4	1251-2026	8		CONNECTOR-PC EDGE 18-CONT/ROW 2-ROWS	28480	1251-2026
A2A13XA5	1251-2026	8		CONNECTOR-PC EDGE 18-CONT/ROW 2-ROWS	28480	1251-2026
A2A13XA6				NOT ASSIGNED		
A2A13XA7A	1251-2026	8		CONNECTOR-PC EDGE 18-CONT/ROW 2-ROWS	28480	1251-2026
A2A13XA7B	1251-2026	8		CONNECTOR-PC EDGE 18-CONT/ROW 2-ROWS	28480	1251-2026
A2A13XA7C	1251-2035	9	5	CONNECTOR-PC EDGE 15-CONT/ROW 2-ROWS	28480	1251-2035
A2A13XA8B	1251-2026	8		CONNECTOR-PC EDGE 18-CONT/ROW 2-ROWS	28480	1251-2026
A2A13XA8C	1251-2035	9		CONNECTOR-PC EDGE 15-CONT/ROW 2-ROWS	28480	1251-2035
A2A13XA9A	1251-2026	8		CONNECTOR-PC EDGE 18-CONT/ROW 2-ROWS	28480	1251-2026
A2A13XA9B	1251-2026	8		CONNECTOR-PC EDGE 18-CONT/ROW 2-ROWS	28480	1251-2026
A2A13XA9C	1251-2035	9		CONNECTOR-PC EDGE 15-CONT/ROW 2-ROWS	28480	1251-2035
A2A13XA10B	1251-2026	8		CONNECTOR-PC EDGE 18-CONT/ROW 2-ROWS	28480	1251-2026
A2A13XA10C	1251-2035	9		CONNECTOR-PC EDGE 15-CONT/ROW 2-ROWS	28480	1251-2035
A2A13XA11B	1251-2026	8		CONNECTOR-PC EDGE 18-CONT/ROW 2-ROWS	28480	1251-2026
A2A13XA11C	1251-2035	9		CONNECTOR-PC EDGE 15-CONT/ROW 2-ROWS	28480	1251-2035
A2A14	08673-60013	6	1	REAR INTERCONNECT BOARD ASSEMBLY	28480	08673-60013
A2A14J1	1251-3025	9		CONNECTOR 34-PIN M RECTANGULAR	28480	1251-3025
A2A15	08673-60010	3	1	HP-IB CONNECTOR BOARD ASSEMBLY	28480	08673-60010
A2A15J1	1251-3283	1	1	CONNECTOR 24-PIN F MICRORIBBON	28480	1251-3283
A2A15MP1	0380-0643	3	2	STANDOFF-HEX .255-IN-LG 6-32THD	00000	ORDER BY DESCRIPTION
A2A15MP2	2190-0017	4	2	WASHER-LK HLCL NO. 8 .168-IN-ID	28480	2190-0017
A2A15MP3	2190-0019	6	2	WASHER-LK HLCL NO. 4 .115-IN-ID	28480	2190-0019
A2A15MP4	2200-0109	8	2	SCREW-MACH 4-40 .438-IN-LG PAN-HD-POZI	00000	ORDER BY DESCRIPTION
A2A15MP5	2260-0002	6	2	NUT-HEX-DBL-CHAM 4-40-THD .062-IN-THK	00000	ORDER BY DESCRIPTION

See introduction to this section for ordering information
*Indicates factory selected value

Table 6-3. Replaceable Parts

Reference Designation	HP Part Number	C D	Qty	Description	Mfr Code	Mfr Part Number
A2A15MP6	3050-0139	6	2	WASHER-FL MTLC NO. 8 .172-IN-ID	28480	3050-0139
A2A15XA1	1251-3403	7	1	CONNECTOR-PC EDGE 10-CONT/ROW 2-ROWS	28480	1251-3403
A2BT1	08672-60092	0	1	BATTERY PACK ASSEMBLY	28480	08672-60092
A2J1	1250-1255	1		CONNECTOR-RF SMB M PC 50-OHM	28480	1250-1255
A2J2	1250-0083	1	5	CONNECTOR-RF BNC FEM SGL-HOLE-FR 50-OHM	28480	1250-0083
A2J3	1250-0083	1		CONNECTOR-RF BNC FEM SGL-HOLE-FR 50-OHM	28480	1250-0083
A2J4	1250-0083	1		CONNECTOR-RF BNC FEM SGL-HOLE-FR 50-OHM	28480	1250-0083
A2J5	1250-0083	1		CONNECTOR-RF BNC FEM SGL-HOLE-FR 50-OHM	28480	1250-0083
A2J6	1251-0143	6	1	CONNECTOR 14-PIN F MICRO RIBBON	28480	1251-0143
A2J7	1250-0083	1		CONNECTOR-RF BNC FEM SGL-HOLE-FR 50-OHM	28480	1250-0083
A2MP1	0624-0268	6	48	SCREW-TPG 4-24 .375-IN-LG PAN-HD-POZI	00000	ORDER BY DESCRIPTION
A2MP2	2190-0018	5	2	WASHER-LK HLCL NO. 6 .141-IN-ID	28480	2190-0018
A2MP3	2190-0401	0	14	WASHER-FL NM NO. 4 .12-IN-ID .312-IN-OD	28480	2190-0401
A2MP4	2200-0103	2	17	SCREW-MACH 4-40 .25-IN-LG PAN-HD-POZI	00000	ORDER BY DESCRIPTION
A2MP5	2360-0115	4	2	SCREW-MACH 6-32 .312-IN-LG PAN-HD-POZI	00000	ORDER BY DESCRIPTION
A2MP6	2360-0181	4	13	SCREW-MACH 6-32 .25-IN-LG 82 DEG	00000	ORDER BY DESCRIPTION
A2MP7	2360-0194	9	2	SCREW-MACH 6-32 .312-IN-LG 100 DEG	00000	ORDER BY DESCRIPTION
A2MP8	2360-0195	0	2	SCREW-MACH 6-32 .312-IN-LG PAN-HD-POZI	00000	ORDER BY DESCRIPTION
A2MP9	2510-0121	1	4	SCREW-MACH 8-32 .375-IN-LG 82 DEG	00000	ORDER BY DESCRIPTION
A2MP10	3050-0010	2	2	WASHER-FL MTLC NO. 6 .147-IN-ID	28480	3050-0010
A2MP11	7100-1266	3	1	CAN-SQUARE	28480	7100-1266
A2MP12	08672-00011	7	1	CLAMP-BATTERY	28480	08672-00011
A2MP13	08672-20120	1	12	STEP WASHER	28480	08672-20120
A2MP14	08672-20142	7	1	AMPLIFIER HOUSING	28480	08672-20142
A2MP15	08672-20146	1	1	MOUNTING BLOCK	28480	08672-20146
A2MP16	08672-60029	3	1	BATTERY HOLDER ASSEMBLY	28480	08672-60029
A2MP17	08673-00003	8	1	SUPPORT-FRONT DCU	28480	08673-00003
A2MP18	08673-00005	0	1	GUSSET-RIGHT DCU	28480	08673-00005
A2MP19	08673-00006	1	1	GUSSET-CENTER DCU	28480	08673-00006
A2MP20	08673-00007	2	1	GUSSET-LEFT DCU	28480	08673-00007
A2MP21	0380-0644	4	2	STANDOFF-METRIC	00000	ORDER BY DESCRIPTION
A2MP22	0520-0129	8	2	SCREW-MACH 2-56 .312-IN-LG PAN-HD-POZI	00000	ORDER BY DESCRIPTION
A2MP23	0610-0001	6	2	NUT-HEX-DBL-CHAM 2-56-THD .062-IN-THK	00000	ORDER BY DESCRIPTION
A2MP24	1400-0249	0	3	CABLE TIE .062-.625-DIA .091-WD NYL	06383	PLT1M-8
A2MP25	2190-0016	3	5	WASHER-LK INTL T 3/8 IN .377-IN-ID	28480	2190-0016
A2MP26	2190-0045	8	2	WASHER-LK HLCL NO. 2 .088-IN-ID	28480	2190-0045
A2MP27	2200-0103	2		SCREW-MACH 4-40 .25-IN-LG PAN-HD-POZI	00000	ORDER BY DESCRIPTION
A2MP28	2950-0043	8	5	NUT-HEX-DBL-CHAM 3/8-32-THD .094-IN-THK	00000	ORDER BY DESCRIPTION
A2MP29	08673-00008	3	1	PANEL-REAR DCU	28480	08673-00008
A2MP30	08673-00009	4	1	COVER-DCU	28480	08673-00009
A2W1	08672-60030	6	1	CABLE ASSEMBLY-VCO OUTPUT	28480	08672-60030
A2W2	08673-60024	9	1	CABLE ASSEMBLY-34 CONDUCTOR 8	28480	08673-60024

See introduction to this section for ordering information
*Indicates factory selected value

Table 6-3. Replaceable Parts

Reference Designation	HP Part Number	C D	Qty	Description	Mfr Code	Mfr Part Number
A3				A3 RF SOURCE MAINFRAME ASSEMBLY		
				M/N REFERENCE ASSEMBLY		
A3A1A1	86701-60021	5	1	REFERENCE PHASE DETECTOR ASSEMBLY	28480	86701-60021
A3A1A1C1	0180-0197	8	19	CAPACITOR-FXD 2.2UF+-10% 20VDC TA	56289	150D225X9020A2
A3A1A1C2	0180-0197	8		CAPACITOR-FXD 2.2UF+-10% 20VDC TA	56289	150D225X9020A2
A3A1A1C3	0180-1746	5	8	CAPACITOR-FXD 15UF+-10% 20VDC TA	56289	150D156X9020B2
A3A1A1C4	0160-3879	7	30	CAPACITOR-FXD .01UF +-20% 100VDC CER	28480	0160-3879
A3A1A1C5	0140-0190	7	2	CAPACITOR-FXD 39PF +-5% 300VDC MICA	72136	DM15E390J0300WV1CR
A3A1A1C6	0160-3879	7		CAPACITOR-FXD .01UF +-20% 100VDC CER	28480	0160-3879
A3A1A1C7	0160-2055	9	52	CAPACITOR-FXD .01UF +80-20% 100VDC CER	28480	0160-2055
A3A1A1C8	0180-0197	8		CAPACITOR-FXD 2.2UF+-10% 20VDC TA	56289	150D225X9020A2
A3A1A1C9	0160-3879	7		CAPACITOR-FXD .01UF +-20% 100VDC CER	28480	0160-3879
A3A1A1C10	0160-2055	9		CAPACITOR-FXD .01UF +80-20% 100VDC CER	28480	0160-2055
A3A1A1C11	0180-0197	8		CAPACITOR-FXD 2.2UF+-10% 20VDC TA	56289	150D225X9020A2
A3A1A1C12	0160-2199	2	7	CAPACITOR-FXD 30PF +-5% 300VDC MICA	28480	0160-2199
A3A1A1C13	0180-0197	8		CAPACITOR-FXD 2.2UF+-10% 20VDC TA	56289	150D225X9020A2
A3A1A1C14	0160-2204	0	6	CAPACITOR-FXD 100PF +-5% 300VDC MICA	28480	0160-2204
A3A1A1C15	0180-0197	8		CAPACITOR-FXD 2.2UF+-10% 20VDC TA	56289	150D225X9020A2
A3A1A1C16	0160-2055	9		CAPACITOR-FXD .01UF +80-20% 100VDC CER	28480	0160-2055
A3A1A1C17	0160-2055	9		CAPACITOR-FXD .01UF +80-20% 100VDC CER	28480	0160-2055
A3A1A1C18	0160-2055	9		CAPACITOR-FXD .01UF +80-20% 100VDC CER	28480	0160-2055
A3A1A1C19	0160-2055	9		CAPACITOR-FXD .01UF +80-20% 100VDC CER	28480	0160-2055
A3A1A1C20	0160-2055	9		CAPACITOR-FXD .01UF +80-20% 100VDC CER	28480	0160-2055
A3A1A1C21	0160-2055	9		CAPACITOR-FXD .01UF +80-20% 100VDC CER	28480	0160-2055
A3A1A1C22	0160-2055	9		CAPACITOR-FXD .01UF +80-20% 100VDC CER	28480	0160-2055
A3A1A1C23	0180-0553	0	1	CAPACITOR-FXD 22UF+-20% 25VDC TA	28480	0180-0553
A3A1A1C24	0160-2055	9		CAPACITOR-FXD .01UF +80-20% 100VDC CER	28480	0160-2055
A3A1A1C25	0160-2055	9		CAPACITOR-FXD .01UF +80-20% 100VDC CER	28480	0160-2055
A3A1A1C26	0160-2204	0		CAPACITOR-FXD 100PF +-5% 300VDC MICA	28480	0160-2204
A3A1A1C27	0140-0193	0	6	CAPACITOR-FXD 82PF +-5% 300VDC MICA	72136	DM15E820J0300WV1CR
A3A1A1C28	0180-0491	5	3	CAPACITOR-FXD 10UF+-20% 25VDC TA	28480	0180-0491
A3A1A1C29	0160-2055	9		CAPACITOR-FXD .01UF +80-20% 100VDC CER	28480	0160-2055
A3A1A1C30	0140-0193	0		CAPACITOR-FXD 82PF +-5% 300VDC MICA	72136	DM15E820J0300WV1CR
A3A1A1C31	0180-1746	5		CAPACITOR-FXD 15UF+-10% 20VDC TA	56289	150D156X9020B2
A3A1A1C32	0170-0066	9	1	CAPACITOR-FXD .027UF +-10% 200VDC POLYE	28480	0170-0066
A3A1A1C33	0160-2055	9		CAPACITOR-FXD .01UF +80-20% 100VDC CER	28480	0160-2055
A3A1A1C34	0160-2055	9		CAPACITOR-FXD .01UF +80-20% 100VDC CER	28480	0160-2055
A3A1A1C35	0140-0193	0		CAPACITOR-FXD 82PF +-5% 300VDC MICA	72136	DM15E820J0300WV1CR
A3A1A1C36	0160-2055	9		CAPACITOR-FXD .01UF +80-20% 100VDC CER	28480	0160-2055
A3A1A1C37	0160-2055	9		CAPACITOR-FXD .01UF +80-20% 100VDC CER	28480	0160-2055
A3A1A1C38	0140-0193	0		CAPACITOR-FXD 82PF +-5% 300VDC MICA	72136	DM15E820J0300WV1CR
A3A1A1C39	0160-3454	4	25	CAPACITOR-FXD 220PF +-10% 1KVDC CER	28480	0160-3454
A3A1A1C40	0180-1746	5		CAPACITOR-FXD 15UF+-10% 20VDC TA	56289	150D156X9020B2
A3A1A1C41	0160-2055	9		CAPACITOR-FXD .01UF +80-20% 100VDC CER	28480	0160-2055
A3A1A1C42	0160-2055	9		CAPACITOR-FXD .01UF +80-20% 100VDC CER	28480	0160-2055
A3A1A1C43	0160-2206	2	1	CAPACITOR-FXD 160PF +-5% 300VDC MICA	28480	0160-2206
A3A1A1C44	0160-2055	9		CAPACITOR-FXD .01UF +80-20% 100VDC CER	28480	0160-2055
A3A1A1C45	0160-2055	9		CAPACITOR-FXD .01UF +80-20% 100VDC CER	28480	0160-2055
A3A1A1C46	0140-0210	2	3	CAPACITOR-FXD 270PF +-5% 300VDC MICA	72136	DM15F271J0300WV1CR
A3A1A1C47	0160-2055	9		CAPACITOR-FXD .01UF +80-20% 100VDC CER	28480	0160-2055
A3A1A1C48	0140-0210	2		CAPACITOR-FXD 270PF +-5% 300VDC MICA	72136	DM15F271J0300WV1CR
A3A1A1C49	0160-2201	7	1	CAPACITOR-FXD 51PF +-5% 300VDC MICA	28480	0160-2201
A3A1A1C50	0160-2055	9		CAPACITOR-FXD .01UF +80-20% 100VDC CER	28480	0160-2055
A3A1A1C51	0140-0210	2		CAPACITOR-FXD 270PF +-5% 300VDC MICA	72136	DM15F271J0300WV1CR
A3A1A1C52	0160-2055	9		CAPACITOR-FXD .01UF +80-20% 100VDC CER	28480	0160-2055
A3A1A1C53	0160-2055	9		CAPACITOR-FXD .01UF +80-20% 100VDC CER	28480	0160-2055
A3A1A1C54	0180-0183	2	1	CAPACITOR-FXD 10UF+75-10% 50VDC AL	56289	30D106G050CB2
A3A1A1C55	0180-1746	5		CAPACITOR-FXD 15UF+-10% 20VDC TA	56289	150D156X9020B2
A3A1A1C56	0180-0229	7	3	CAPACITOR-FXD 33UF+-10% 10VDC TA	56289	150D336X9010B2
A3A1A1C57	0160-2204	0		CAPACITOR-FXD 100PF +-5% 300VDC MICA	28480	0160-2204
A3A1A1C58	0160-3879	7		CAPACITOR-FXD .01UF +-20% 100VDC CER	28480	0160-3879
A3A1A1C59	0160-3878	6	35	CAPACITOR-FXD 1000PF +-20% 100VDC CER	28480	0160-3878
A3A1A1C60	0160-3879	7		CAPACITOR-FXD .01UF +-20% 100VDC CER	28480	0160-3879
A3A1A1C61	0160-3454	4		CAPACITOR-FXD 220PF +-10% 1KVDC CER	28480	0160-3454
A3A1A1C62	0160-3878	6		CAPACITOR-FXD 1000PF +-20% 100VDC CER	28480	0160-3878
A3A1A1CR1	1901-0518	8	6	DIODE-SM SIG SCHOTTKY	28480	1901-0518
A3A1A1CR2	1901-0518	8		DIODE-SM SIG SCHOTTKY	28480	1901-0518
A3A1A1CR3	1901-0518	8		DIODE-SM SIG SCHOTTKY	28480	1901-0518
A3A1A1CR4	1901-0518	8		DIODE-SM SIG SCHOTTKY	28480	1901-0518
A3A1A1CR5	1901-0518	8		DIODE-SM SIG SCHOTTKY	28480	1901-0518

See introduction to this section for ordering information
*Indicates factory selected value

Table 6-3. Replaceable Parts

Reference Designation	HP Part Number	C D	Qty	Description	Mfr Code	Mfr Part Number
A3A1A1CR6	1901-0518	8		DIODE-SM SIG SCHOTTKY	28480	1901-0518
A3A1A1J1	1250-0544	9	8	CONNECTOR-RF SM-SNP M SGL-HOLE-FR 50-OHM	28480	1250-0544
A3A1A1J2	1250-0544	9		CONNECTOR-RF SM-SNP M SGL-HOLE-FR 50-OHM	28480	1250-0544
A3A1A1J3	1250-0544	9		CONNECTOR-RF SM-SNP M SGL-HOLE-FR 50-OHM	28480	1250-0544
A3A1A1J4	1250-0544	9		CONNECTOR-RF SM-SNP M SGL-HOLE-FR 50-OHM	28480	1250-0544
A3A1A1J5	1250-0544	9		CONNECTOR-RF SM-SNP M SGL-HOLE-FR 50-OHM	28480	1250-0544
A3A1A1L1	9140-0238	3	2	INDUCTOR RF-CH-MLD 82UH 5% .166DX.385LG	28480	9140-0238
A3A1A1L2	9140-0238	3		INDUCTOR RF-CH-MLD 82UH 5% .166DX.385LG	28480	9140-0238
A3A1A1L3	9140-0143	9	3	INDUCTOR RF-CH-MLD 3.3UH 10% .105DX.26LG	28480	9140-0143
A3A1A1L4	9140-0143	9		INDUCTOR RF-CH-MLD 3.3UH 10% .105DX.26LG	28480	9140-0143
A3A1A1L5	9100-2261	2	1	INDUCTOR RF-CH-MLD 2.7UH 10% .105DX.26LG	28480	9100-2261
A3A1A1L6	9140-0114	4	1	INDUCTOR RF-CH-MLD 10UH 10% .166DX.385LG	28480	9140-0114
A3A1A1L7	9100-2255	4	4	INDUCTOR RF-CH-MLD 470NH 10% .105DX.26LG	28480	9100-2255
A3A1A1L8	9100-0368	6	4	INDUCTOR RF-CH-MLD 330NH 10% .105DX.26LG	28480	9100-0368
A3A1A1L9	9100-2257	6	3	INDUCTOR RF-CH-MLD 820NH 10% .105DX.26LG	28480	9100-2257
A3A1A1L10	9100-2255	4		INDUCTOR RF-CH-MLD 470NH 10% .105DX.26LG	28480	9100-2255
A3A1A1L11	9100-2257	6		INDUCTOR RF-CH-MLD 820NH 10% .105DX.26LG	28480	9100-2257
A3A1A1L12	9100-2255	4		INDUCTOR RF-CH-MLD 470NH 10% .105DX.26LG	28480	9100-2255
A3A1A1L13	9100-2257	6		INDUCTOR RF-CH-MLD 820NH 10% .105DX.26LG	28480	9100-2257
A3A1A1L14	9100-2255	4		INDUCTOR RF-CH-MLD 470NH 10% .105DX.26LG	28480	9100-2255
A3A1A1L15	9100-2256	5	1	INDUCTOR RF-CH-MLD 560NH 10% .105DX.26LG	28480	9100-2256
A3A1A1MP1	1205-0250	9	1	THERMAL LINK SGL TO-5/TO-39-CS	28480	1205-0250
A3A1A1MP2	2190-0124	4	8	WASHER-LK INTL T NO. 10 .195-IN-ID	28480	2190-0124
A3A1A1MP3	2200-0101	0	10	SCREW-MACH 4-40 .188-IN-LG PAN-HD-POZI	00000	ORDER BY DESCRIPTION
A3A1A1MP4	2950-0078	9	4	NUT-HEX-DBL-CHAM 10-32-THD .067-IN-THK	28480	2950-0078
A3A1A1MP5	6040-0239	9	1	LUBRICANT-GREASE SIL	05820	120
A3A1A1MP6	86701-20040	4	1	COVER-P.C. (PHASE LOCK)	28480	86701-20040
A3A1A1MP7	86701-40001	9	12	EXTRACTOR-P.C. BOARD	28480	86701-40001
A3A1A1Q1	1854-0019	3	3	TRANSISTOR NPN SI TO-18 PD=360MW	28480	1854-0019
A3A1A1Q2	1854-0019	3		TRANSISTOR NPN SI TO-18 PD=360MW	28480	1854-0019
A3A1A1Q3	1854-0019	3		TRANSISTOR NPN SI TO-18 PD=360MW	28480	1854-0019
A3A1A1Q4	1855-0049	1	1	TRANSISTOR-JFET DUAL N-CHAN D-MODE SI	28480	1855-0049
A3A1A1Q5	1853-0451	5	15	TRANSISTOR PNP 2N3799 SI TO-18 PD=360MW	01295	2N3799
A3A1A1Q6	1853-0451	5		TRANSISTOR PNP 2N3799 SI TO-18 PD=360MW	01295	2N3799
A3A1A1Q7	1853-0034	0	1	TRANSISTOR PNP SI TO-18 PD=360MW	28480	1853-0034
A3A1A1R1	0757-0399	5	3	RESISTOR 82.5 1% .125W F TC=0+-100	24546	C4-1/8-T0-82R5-F
A3A1A1R2	0757-0417	8	1	RESISTOR 562 1% .125W F TC=0+-100	24546	C4-1/8-T0-562R-F
A3A1A1R3	0757-0416	7	19	RESISTOR 511 1% .125W F TC=0+-100	24546	C4-1/8-T0-511R-F
A3A1A1R4	0757-0401	0	26	RESISTOR 100 1% .125W F TC=0+-100	24546	C4-1/8-T0-101-F
A3A1A1R5	0698-3156	2	3	RESISTOR 14.7K 1% .125W F TC=0+-100	24546	C4-1/8-T0-1472-F
A3A1A1R6	0757-0401	0		RESISTOR 100 1% .125W F TC=0+-100	24546	C4-1/8-T0-101-F
A3A1A1R7	0757-0420	3	6	RESISTOR 750 1% .125W F TC=0+-100	24546	C4-1/8-T0-751-F
A3A1A1R8	0757-0438	3	20	RESISTOR 5.11K 1% .125W F TC=0+-100	24546	C4-1/8-T0-5111-F
A3A1A1R9	0757-0399	5		RESISTOR 82.5 1% .125W F TC=0+-100	24546	C4-1/8-T0-82R5-F
A3A1A1R10	0698-7222	1	2	RESISTOR 261 1% .05W F TC=0+-100	24546	C3-1/8-T0-261R-F
A3A1A1R11	0698-7219	6	7	RESISTOR 196 1% .05W F TC=0+-100	24546	C3-1/8-T0-196R-F
A3A1A1R12	0757-0442	9	20	RESISTOR 10K 1% .125W F TC=0+-100	24546	C4-1/8-T0-1002-F
A3A1A1R13	0698-3453	2	3	RESISTOR 196K 1% .125W F TC=0+-100	24546	C4-1/8-T0-1963-F
A3A1A1R14	0757-0442	9		RESISTOR 10K 1% .125W F TC=0+-100	24546	C4-1/8-T0-1002-F
A3A1A1R15	0698-3453	2		RESISTOR 196K 1% .125W F TC=0+-100	24546	C4-1/8-T0-1963-F
A3A1A1R16	0757-0441	8	6	RESISTOR 8.25K 1% .125W F TC=0+-100	24546	C4-1/8-T0-8251-F
A3A1A1R17	0698-3438	3	3	RESISTOR 147 1% .125W F TC=0+-100	24546	C4-1/8-T0-147R-F
A3A1A1R18	0757-0346	2	31	RESISTOR 10 1% .125W F TC=0+-100	24546	C4-1/8-T0-10R0-F
A3A1A1R19	0757-0346	2		RESISTOR 10 1% .125W F TC=0+-100	24546	C4-1/8-T0-10R0-F
A3A1A1R20	0757-0441	8		RESISTOR 8.25K 1% .125W F TC=0+-100	24546	C4-1/8-T0-8251-F
A3A1A1R21	0698-3438	3		RESISTOR 147 1% .125W F TC=0+-100	24546	C4-1/8-T0-147R-F
A3A1A1R22	0698-3136	8	1	RESISTOR 17.8K 1% .125W F TC=0+-100	24546	C4-1/8-T0-1782-F
A3A1A1R23	0757-0346	2		RESISTOR 10 1% .125W F TC=0+-100	24546	C4-1/8-T0-10R0-F
A3A1A1R24	0698-3154	0	12	RESISTOR 4.22K 1% .125W F TC=0+-100	24546	C4-1/8-T0-4221-F
A3A1A1R25	0757-0346	2		RESISTOR 10 1% .125W F TC=0+-100	24546	C4-1/8-T0-10R0-F
A3A1A1R26	0757-0280	3	23	RESISTOR 1K 1% .125W F TC=0+-100	24546	C4-1/8-T0-1001-F
A3A1A1R27	0698-3154	0		RESISTOR 4.22K 1% .125W F TC=0+-100	24546	C4-1/8-T0-4221-F
A3A1A1R28	0698-3450	9	3	RESISTOR 42.2K 1% .125W F TC=0+-100	24546	C4-1/8-T0-4222-F
A3A1A1R29	0698-3449	6	2	RESISTOR 28.7K 1% .125W F TC=0+-100	24546	C4-1/8-T0-2872-F
A3A1A1R30	0757-0444	1	2	RESISTOR 12.1K 1% .125W F TC=0+-100	24546	C4-1/8-T0-1212-F
A3A1A1R31	0698-3154	0		RESISTOR 4.22K 1% .125W F TC=0+-100	24546	C4-1/8-T0-4221-F
A3A1A1R32	0757-0346	2		RESISTOR 10 1% .125W F TC=0+-100	24546	C4-1/8-T0-10R0-F
A3A1A1R33	0698-3154	0		RESISTOR 4.22K 1% .125W F TC=0+-100	24546	C4-1/8-T0-4221-F
A3A1A1R34	0757-0346	2		RESISTOR 10 1% .125W F TC=0+-100	24546	C4-1/8-T0-10R0-F
A3A1A1R35	0757-0280	3		RESISTOR 1K 1% .125W F TC=0+-100	24546	C4-1/8-T0-1001-F
A3A1A1R36	0757-0444	1		RESISTOR 12.1K 1% .125W F TC=0+-100	24546	C4-1/8-T0-1212-F
A3A1A1R37	0757-0200	7	1	RESISTOR 5.62K 1% .125W F TC=0+-100	24546	C4-1/8-T0-5621-F
A3A1A1R38	0757-0421	4	9	RESISTOR 825 1% .125W F TC=0+-100	24546	C4-1/8-T0-825R-F
A3A1A1R39	0757-0440	7	5	RESISTOR 7.5K 1% .125W F TC=0+-100	24546	C4-1/8-T0-7501-F
A3A1A1R40	0757-0394	0	16	RESISTOR 51.1 1% .125W F TC=0+-100	24546	C4-1/8-T0-51R1-F

See introduction to this section for ordering information
*Indicates factory selected value

Table 6-3. Replaceable Parts

Reference Designation	HP Part Number	C D	Qty	Description	Mfr Code	Mfr Part Number
A3A1A1R41	0698-3446	3	2	RESISTOR 383 1% .125W F TC=0+-100	24546	C4-1/8-T0-383R-F
A3A1A1R42	0698-0085	0	7	RESISTOR 2.61K 1% .125W F TC=0+-100	24546	C4-1/8-T0-2611-F
A3A1A1R43	0757-0442	9		RESISTOR 10K 1% .125W F TC=0+-100	24546	C4-1/8-T0-1002-F
A3A1A1R44	0757-0442	9		RESISTOR 10K 1% .125W F TC=0+-100	24546	C4-1/8-T0-1002-F
A3A1A1R45	0757-0280	3		RESISTOR 1K 1% .125W F TC=0+-100	24546	C4-1/8-T0-1001-F
A3A1A1R46	0698-3154	0		RESISTOR 4.22K 1% .125W F TC=0+-100	24546	C4-1/8-T0-4221-F
A3A1A1R47	0698-3453	2		RESISTOR 196K 1% .125W F TC=0+-100	24546	C4-1/8-T0-1963-F
A3A1A1R48	0757-0442	9		RESISTOR 10K 1% .125W F TC=0+-100	24546	C4-1/8-T0-1002-F
A3A1A1R49	0698-7285	6	1	RESISTOR 110K 1% .05W F TC=0+-100	24546	C3-1/8-T0-1103-F
A3A1A1R50	0698-3157	3	6	RESISTOR 19.6K 1% .125W F TC=0+-100	24546	C4-1/8-T0-1962-F
A3A1A1R51	0698-3157	3		RESISTOR 19.6K 1% .125W F TC=0+-100	24546	C4-1/8-T0-1962-F
A3A1A1R52	0757-0401	0		RESISTOR 100 1% .125W F TC=0+-100	24546	C4-1/8-T0-101-F
A3A1A1R53	0698-3440	7	8	RESISTOR 196 1% .125W F TC=0+-100	24546	C4-1/8-T0-196R-F
A3A1A1R54	0698-7234	5	1	RESISTOR 825 1% .05W F TC=0+-100	24546	C3-1/8-T0-825R-F
A3A1A1R55	0698-7257	2	1	RESISTOR 7.5K 1% .05W F TC=0+-100	24546	C3-1/8-T0-7501-F
A3A1A1R56	0757-0394	0		RESISTOR 51.1 1% .125W F TC=0+-100	24546	C4-1/8-T0-51R1-F
A3A1A1R57	0698-3446	3		RESISTOR 383 1% .125W F TC=0+-100	24546	C4-1/8-T0-383R-F
A3A1A1R58	0698-7246	9	1	RESISTOR 2.61K 1% .05W F TC=0+-100	24546	C3-1/8-T0-2611-F
A3A1A1R59	0698-3440	7		RESISTOR 196 1% .125W F TC=0+-100	24546	C4-1/8-T0-196R-F
A3A1A1R60	0757-0276	7	4	RESISTOR 61.9 1% .125W F TC=0+-100	24546	C4-1/8-T0-6192-F
A3A1A1R61	0757-0280	3		RESISTOR 1K 1% .125W F TC=0+-100	24546	C4-1/8-T0-1001-F
A3A1A1R62	0757-1094	9	3	RESISTOR 1.47K 1% .125W F TC=0+-100	24546	C4-1/8-T0-1471-F
A3A1A1R63	0698-0085	0		RESISTOR 2.61K 1% .125W F TC=0+-100	24546	C4-1/8-T0-2611-F
A3A1A1R64	0698-3132	4	4	RESISTOR 261 1% .125W F TC=0+-100	24546	C4-1/8-T0-2610-F
A3A1A1R65	0698-0085	0		RESISTOR 2.61K 1% .125W F TC=0+-100	24546	C4-1/8-T0-2611-F
A3A1A1R66	0757-0421	4		RESISTOR 825 1% .125W F TC=0+-100	24546	C4-1/8-T0-825R-F
A3A1A1R67	0757-0280	3		RESISTOR 1K 1% .125W F TC=0+-100	24546	C4-1/8-T0-1001-F
A3A1A1R68	0757-0416	7		RESISTOR 511 1% .125W F TC=0+-100	24546	C4-1/8-T0-511R-F
A3A1A1R69	0757-0416	7		RESISTOR 511 1% .125W F TC=0+-100	24546	C4-1/8-T0-511R-F
A3A1A1R70	0757-0416	7		RESISTOR 511 1% .125W F TC=0+-100	24546	C4-1/8-T0-511R-F
A3A1A1R71	0757-0274	5	1	RESISTOR 1.21K 1% .125W F TC=0+-100	24546	C4-1/8-T0-1211-F
A3A1A1R72	0698-3132	4		RESISTOR 261 1% .125W F TC=0+-100	24546	C4-1/8-T0-2610-F
A3A1A1R73	0757-0317	7	3	RESISTOR 1.33K 1% .125W F TC=0+-100	24546	C4-1/8-T0-1331-F
A3A1A1R74	0757-0289	2	1	RESISTOR 13.3K 1% .125W F TC=0+-100	19701	MF4C1/8-T0-1332-F
A3A1A1R75	0698-7236	7	4	RESISTOR 1K 1% .05W F TC=0+-100	24546	C3-1/8-T0-1001-F
A3A1A1T1	08552-6044	1	2	TRANSFORMER-RF, 5-PIN	28480	08552-6044
A3A1A1T2	08552-6044	1		TRANSFORMER-RF, 5-PIN	28480	08552-6044
A3A1A1TP1	1251-0600	0	49	CONNECTOR-SGL CONT PIN 1.14-MM-BSC-SZ SQ	28480	1251-0600
A3A1A1U1	1821-0001	4	1	TRANSISTOR ARRAY 14-PIN PLSTC DIP	3L585	CA3046
A3A1A1U2	1820-0328	6	1	IC GATE TTL NOR QUAD 2-INP	01295	SN7402N
A3A1A1U3	1820-1383	5	1	IC CNTR ECL BCD POS-EDGE-TRIG	04713	MC10138L
A3A1A1U4	1820-0802	1	6	IC GATE ECL NOR QUAD 2-INP	04713	MC10102P
A3A1A1U5	1820-0223	0	6	IC OP AMP GP TO-99 PKG	3L585	CA301AT
A3A1A1U6	1820-0429	8	1	IC V RGLTR TO-39	18324	LM309H
A3A1A1VR1	1902-3082	9	3	DIODE-ZNR 4.64V 5% DO-35 PD=.4W	28480	1902-3082
A3A1A1VR2	1902-3256	9	1	DIODE-ZNR 23.7V 5% DO-35 PD=.4W	28480	1902-3256
A3A1A1W1	86701-60059	9	1	CABLE ASSEMBLY-GRAY/ORANGE/WHITE	28480	86701-60059
A3A1A2	86701-60020	4	1	100 MHZ VCXO ASSEMBLY	28480	86701-60020
A3A1A2C1	0121-0495	5	3	CAPACITOR-V TRMR-AIR 1.9-15.7PF 175V	74970	187-0309-125
A3A1A2C2	0121-0495	5		CAPACITOR-V TRMR-AIR 1.9-15.7PF 175V	74970	187-0309-125
A3A1A2C3	0121-0495	5		CAPACITOR-V TRMR-AIR 1.9-15.7PF 175V	74970	187-0309-125
A3A1A2C4	0121-0453	5	1	CAPACITOR-V TRMR-AIR 1.3-5.4PF 175V	74970	187-0303-125
A3A1A2C5	0180-0049	9	1	CAPACITOR-FXD 20UF+75-10% 50VDC AL	56289	30D206G050CC2
A3A1A2C6	0160-3456	6	3	CAPACITOR-FXD 1000PF +-10% 1KVDC CER	28480	0160-3456
A3A1A2C7	0160-3454	4		CAPACITOR-FXD 220PF +-10% 1KVDC CER	28480	0160-3454
A3A1A2C8	0160-2257	3	2	CAPACITOR-FXD 10PF +-5% 500VDC CER 0+-60	28480	0160-2257
A3A1A2C9	0160-4084	8	10	CAPACITOR-FXD .1UF +-20% 50VDC CER	28480	0160-4084
A3A1A2C10	0140-0191	8	1	CAPACITOR-FXD 56PF +-5% 300VDC MICA	72136	DM15E560J0300WV1CR
A3A1A2C11	0160-2204	0		CAPACITOR-FXD 100PF +-5% 300VDC MICA	28480	0160-2204
A3A1A2C12	0160-3454	4		CAPACITOR-FXD 220PF +-10% 1KVDC CER	28480	0160-3454
A3A1A2C13	0160-3454	4		CAPACITOR-FXD 220PF +-10% 1KVDC CER	28480	0160-3454
A3A1A2C14	0160-3454	4		CAPACITOR-FXD 220PF +-10% 1KVDC CER	28480	0160-3454
A3A1A2C15	0160-2261	9	8	CAPACITOR-FXD 15PF +-5% 500VDC CER 0+-30	28480	0160-2261
A3A1A2C16	0160-2261	9		CAPACITOR-FXD 15PF +-5% 500VDC CER 0+-30	28480	0160-2261
A3A1A2C17	0160-3454	4		CAPACITOR-FXD 220PF +-10% 1KVDC CER	28480	0160-3454
A3A1A2C18	0160-3454	4		CAPACITOR-FXD 220PF +-10% 1KVDC CER	28480	0160-3454
A3A1A2C19	0160-2261	9		CAPACITOR-FXD 15PF +-5% 500VDC CER 0+-30	28480	0160-2261
A3A1A2C20	0160-2261	9		CAPACITOR-FXD 15PF +-5% 500VDC CER 0+-30	28480	0160-2261
A3A1A2C21	0160-3454	4		CAPACITOR-FXD 220PF +-10% 1KVDC CER	28480	0160-3454
A3A1A2C22	0160-3454	4		CAPACITOR-FXD 220PF +-10% 1KVDC CER	28480	0160-3454
A3A1A2C23	0160-3454	4		CAPACITOR-FXD 220PF +-10% 1KVDC CER	28480	0160-3454
A3A1A2C24	0160-3454	4		CAPACITOR-FXD 220PF +-10% 1KVDC CER	28480	0160-3454
A3A1A2C25	0160-3454	4		CAPACITOR-FXD 220PF +-10% 1KVDC CER	28480	0160-3454

See introduction to this section for ordering information
*Indicates factory selected value

Table 6-3. Replaceable Parts

Reference Designation	HP Part Number	C D	Qty	Description	Mfr Code	Mfr Part Number
A3A1A2C26	0160-2261	9		CAPACITOR-FXD 15PF +-5% 500VDC CER 0+-30	28480	0160-2261
A3A1A2C27	0160-2261	9		CAPACITOR-FXD 15PF +-5% 500VDC CER 0+-30	28480	0160-2261
A3A1A2C28	0160-3454	4		CAPACITOR-FXD 220PF +-10% 1KVDC CER	28480	0160-3454
A3A1A2C29	0160-3454	4		CAPACITOR-FXD 220PF +-10% 1KVDC CER	28480	0160-3454
A3A1A2C30	0160-3454	4		CAPACITOR-FXD 220PF +-10% 1KVDC CER	28480	0160-3454
A3A1A2C31	0160-3454	4		CAPACITOR-FXD 220PF +-10% 1KVDC CER	28480	0160-3454
A3A1A2C32	0160-2261	9		CAPACITOR-FXD 15PF +-5% 500VDC CER 0+-30	28480	0160-2261
A3A1A2C33	0160-2261	9		CAPACITOR-FXD 15PF +-5% 500VDC CER 0+-30	28480	0160-2261
A3A1A2C34	0160-3454	4		CAPACITOR-FXD 220PF +-10% 1KVDC CER	28480	0160-3454
A3A1A2C35	0160-3454	4		CAPACITOR-FXD 220PF +-10% 1KVDC CER	28480	0160-3454
A3A1A2C36	0160-3878	6		CAPACITOR-FXD 1000PF +-20% 100VDC CER	28480	0160-3878
A3A1A2C37	0160-3878	6		CAPACITOR-FXD 1000PF +-20% 100VDC CER	28480	0160-3878
A3A1A2C38	0160-3878	6		CAPACITOR-FXD 1000PF +-20% 100VDC CER	28480	0160-3878
A3A1A2C39	0160-3454	4		CAPACITOR-FXD 220PF +-10% 1KVDC CER	28480	0160-3454
A3A1A2C40	0160-2238	0	1	CAPACITOR-FXD 1.5PF +-.25PF 500VDC CER	28480	0160-2238
A3A1A2C41	0160-3878	6		CAPACITOR-FXD 1000PF +-20% 100VDC CER	28480	0160-3878
A3A1A2C42	0160-3878	6		CAPACITOR-FXD 1000PF +-20% 100VDC CER	28480	0160-3878
A3A1A2C43	0180-0116	1	12	CAPACITOR-FXD 6.8UF+-10% 35VDC TA	56289	150D685X9035B2
A3A1A2C44	0160-2253	9	1	CAPACITOR-FXD 6.8PF +-.25PF 500VDC CER	28480	0160-2253
A3A1A2C45	0160-3878	6		CAPACITOR-FXD 1000PF +-20% 100VDC CER	28480	0160-3878
A3A1A2C46	0160-3878	6		CAPACITOR-FXD 1000PF +-20% 100VDC CER	28480	0160-3878
A3A1A2C47	0160-3454	4		CAPACITOR-FXD 220PF +-10% 1KVDC CER	28480	0160-3454
A3A1A2C48	0160-3456	6		CAPACITOR-FXD 1000PF +-10% 1KVDC CER	28480	0160-3456
A3A1A2C49	0160-3456	6		CAPACITOR-FXD 1000PF +-10% 1KVDC CER	28480	0160-3456
A3A1A2C50	0180-0116	1		CAPACITOR-FXD 6.8UF+-10% 35VDC TA	56289	150D685X9035B2
A3A1A2C51	0160-4299	7	11	CAPACITOR-FXD 2200PF +-20% 250VDC CER	56289	C067F251F222MS22-CDH
A3A1A2C52	0160-3454	4		CAPACITOR-FXD 220PF +-10% 1KVDC CER	28480	0160-3454
A3A1A2C53	0160-3454	4		CAPACITOR-FXD 220PF +-10% 1KVDC CER	28480	0160-3454
A3A1A2C54	0160-3454	4		CAPACITOR-FXD 220PF +-10% 1KVDC CER	28480	0160-3454
A3A1A2C55	0160-3454	4		CAPACITOR-FXD 220PF +-10% 1KVDC CER	28480	0160-3454
A3A1A2C56	0160-2437	1	13	CAPACITOR-FDTHRU 5000PF +80 -20% 200V	28480	0160-2437
A3A1A2CR1	0122-0245	5	1	DIODE-VVC 1N5139 6.8PF 10%	01281	1N5139
A3A1A2CR2				NOT ASSIGNED		
A3A1A2CR3	1901-0539	3	3	DIODE-SM SIG SCHOTTKY	28480	1901-0539
A3A1A2CR4	1901-0539	3		DIODE-SM SIG SCHOTTKY	28480	1901-0539
A3A1A2J1	1250-0544	9		CONNECTOR-RF SM-SNP M SGL-HOLE-FR 50-OHM	28480	1250-0544
A3A1A2J2	1250-0544	9		CONNECTOR-RF SM-SNP M SGL-HOLE-FR 50-OHM	28480	1250-0544
A3A1A2J3	1250-0544	9		CONNECTOR-RF SM-SNP M SGL-HOLE-FR 50-OHM	28480	1250-0544
A3A1A2J4				PART OF A3A1A2W1		
A3A1A2L1				NOT ASSIGNED		
A3A1A2L2	9100-2249	6	3	INDUCTOR RF-CH-MLD 150NH 10% .105DX.26LG	28480	9100-2249
A3A1A2L3	9140-0158	6	2	INDUCTOR RF-CH-MLD 1UH 10% .105DX.26LG	28480	9140-0158
A3A1A2L4	9100-2254	3	3	INDUCTOR RF-CH-MLD 390NH 10% .105DX.26LG	28480	9100-2254
A3A1A2L5	9100-2538	6	1	INDUCTOR RF-CH-MLD 1UH 10% .161DX.385LG	28480	9100-2538
A3A1A2L6	9100-2251	0	5	INDUCTOR RF-CH-MLD 220NH 10% .105DX.26LG	28480	9100-2251
A3A1A2L7	9100-2251	0		INDUCTOR RF-CH-MLD 220NH 10% .105DX.26LG	28480	9100-2251
A3A1A2L8	9100-2251	0		INDUCTOR RF-CH-MLD 220NH 10% .105DX.26LG	28480	9100-2251
A3A1A2L9	9100-2251	0		INDUCTOR RF-CH-MLD 220NH 10% .105DX.26LG	28480	9100-2251
A3A1A2L10				PART OF ETCHED CIRCUIT BOARD		
A3A1A2L11				PART OF ETCHED CIRCUIT BOARD		
A3A1A2L12				PART OF ETCHED CIRCUIT BOARD		
A3A1A2L13				NOT ASSIGNED		
A3A1A2L14	9100-2247	4	2	INDUCTOR RF-CH-MLD 100NH 10% .105DX.26LG	28480	9100-2247
A3A1A2L15	9100-2247	4		INDUCTOR RF-CH-MLD 100NH 10% .105DX.26LG	28480	9100-2247
A3A1A2MP1	2190-0009	4	3	WASHER-LK INTL T NO. 8 .168-IN-ID	28480	2190-0009
A3A1A2MP2	2580-0002	4	3	NUT-HEX-DBL-CHAM 8-32-THD .085-IN-THK	00000	ORDER BY DESCRIPTION
A3A1A2MP3	2200-0101	0		SCREW-MACH 4-40 .188-IN-LG PAN-HD-POZI	00000	ORDER BY DESCRIPTION
A3A1A2MP4	6040-0239	9		LUBRICANT-GREASE SIL	05820	120
A3A1A2MP5	86701-60073	7	1	SHIELD ASSEMBLY	28480	86701-60073
A3A1A2MP6	86701-20039	1	1	COVER- P.C. VCXO BOARD	28480	86701-20039
A3A1A2MP7	86701-40001	9		EXTRACTOR-P.C. BOARD	28480	86701-40001
A3A1A2Q1	1854-0345	8	16	TRANSISTOR NPN 2N5179 SI TO-72 PD=200MW	04713	2N5179
A3A1A2Q2	1854-0345	8		TRANSISTOR NPN 2N5179 SI TO-72 PD=200MW	04713	2N5179
A3A1A2Q3	1854-0345	8		TRANSISTOR NPN 2N5179 SI TO-72 PD=200MW	04713	2N5179
A3A1A2Q4	1854-0345	8		TRANSISTOR NPN 2N5179 SI TO-72 PD=200MW	04713	2N5179
A3A1A2Q5	1854-0247	9	5	TRANSISTOR NPN SI TO-39 PD=1W FT=800MHZ	28480	1854-0247
A3A1A2Q6	1854-0345	8		TRANSISTOR NPN 2N5179 SI TO-72 PD=200MW	04713	2N5179
A3A1A2Q7	1854-0345	8		TRANSISTOR NPN 2N5179 SI TO-72 PD=200MW	04713	2N5179
A3A1A2Q8	1854-0345	8		TRANSISTOR NPN 2N5179 SI TO-72 PD=200MW	04713	2N5179
A3A1A2Q9	1854-0345	8		TRANSISTOR NPN 2N5179 SI TO-72 PD=200MW	04713	2N5179
A3A1A2Q10	1854-0404	0	16	TRANSISTOR NPN SI TO-18 PD=360MW	28480	1854-0404
A3A1A2Q11	1854-0345	8		TRANSISTOR NPN 2N5179 SI TO-72 PD=200MW	04713	2N5179

See introduction to this section for ordering information
*Indicates factory selected value

Table 6-3. Replaceable Parts

Reference Designation	HP Part Number	C D	Qty	Description	Mfr Code	Mfr Part Number
A3A1A2R1	0757-0279	0	5	RESISTOR 3.16K 1% .125W F TC=0+-100	24546	C4-1/8-T0-3161-F
A3A1A2R2	0757-0419	0	3	RESISTOR 681 1% .125W F TC=0+-100	24546	C4-1/8-T0-681R-F
A3A1A2R3	0698-3440	7		RESISTOR 196 1% .125W F TC=0+-100	24546	C4-1/8-T0-196R-F
A3A1A2R4	0757-0422	5	9	RESISTOR 909 1% .125W F TC=0+-100	24546	C4-1/8-T0-909R-F
A3A1A2R5	0698-3155	1	10	RESISTOR 4.64K 1% .125W F TC=0+-100	24546	C4-1/8-T0-4641-F
A3A1A2R6	0698-7224	3	6	RESISTOR 316 1% .05W F TC=0+-100	24546	C3-1/8-T0-316R-F
A3A1A2R7	0757-0346	2		RESISTOR 10 1% .125W F TC=0+-100	24546	C4-1/8-T0-10R0-F
A3A1A2R8	0757-0422	5		RESISTOR 909 1% .125W F TC=0+-100	24546	C4-1/8-T0-909R-F
A3A1A2R9	0757-0442	9		RESISTOR 10K 1% .125W F TC=0+-100	24546	C4-1/8-T0-1002-F
A3A1A2R10	0757-0401	0		RESISTOR 100 1% .125W F TC=0+-100	24546	C4-1/8-T0-101-F
A3A1A2R11	0757-0394	0		RESISTOR 51.1 1% .125W F TC=0+-100	24546	C4-1/8-T0-51R1-F
A3A1A2R12	0757-0416	7		RESISTOR 511 1% .125W F TC=0+-100	24546	C4-1/8-T0-511R-F
A3A1A2R13	0757-0394	0		RESISTOR 51.1 1% .125W F TC=0+-100	24546	C4-1/8-T0-51R1-F
A3A1A2R14	0757-0416	7		RESISTOR 511 1% .125W F TC=0+-100	24546	C4-1/8-T0-511R-F
A3A1A2R15	0757-0422	5		RESISTOR 909 1% .125W F TC=0+-100	24546	C4-1/8-T0-909R-F
A3A1A2R16	0757-0401	0		RESISTOR 100 1% .125W F TC=0+-100	24546	C4-1/8-T0-101-F
A3A1A2R17	0698-3150	6	18	RESISTOR 2.37K 1% .125W F TC=0+-100	24546	C4-1/8-T0-2371-F
A3A1A2R18	0698-3150	6		RESISTOR 2.37K 1% .125W F TC=0+-100	24546	C4-1/8-T0-2371-F
A3A1A2R19	0698-7198	0	2	RESISTOR 26.1 1% .05W F TC=0+-100	24546	C3-1/8-T0-26R1-F
A3A1A2R20	0698-3443	0	7	RESISTOR 287 1% .125W F TC=0+-100	24546	C4-1/8-T0-287R-F
A3A1A2R21	0698-3429	2	6	RESISTOR 19.6 1% .125W F TC=0+-100	03888	PME55-1/8-T0-19R6-F
A3A1A2R22	0698-3443	0		RESISTOR 287 1% .125W F TC=0+-100	24546	C4-1/8-T0-287R-F
A3A1A2R23	0698-3150	6		RESISTOR 2.37K 1% .125W F TC=0+-100	24546	C4-1/8-T0-2371-F
A3A1A2R24	0757-0401	0		RESISTOR 100 1% .125W F TC=0+-100	24546	C4-1/8-T0-101-F
A3A1A2R25	0698-3150	6		RESISTOR 2.37K 1% .125W F TC=0+-100	24546	C4-1/8-T0-2371-F
A3A1A2R26	0757-0416	7		RESISTOR 511 1% .125W F TC=0+-100	24546	C4-1/8-T0-511R-F
A3A1A2R27	0757-0346	2		RESISTOR 10 1% .125W F TC=0+-100	24546	C4-1/8-T0-10R0-F
A3A1A2R28	0757-0422	5		RESISTOR 909 1% .125W F TC=0+-100	24546	C4-1/8-T0-909R-F
A3A1A2R29	0698-7198	0		RESISTOR 26.1 1% .05W F TC=0+-100	24546	C3-1/8-T0-26R1-F
A3A1A2R30	0698-3443	0		RESISTOR 287 1% .125W F TC=0+-100	24546	C4-1/8-T0-287R-F
A3A1A2R31	0698-3429	2		RESISTOR 19.6 1% .125W F TC=0+-100	03888	PME55-1/8-T0-19R6-F
A3A1A2R32	0698-3443	0		RESISTOR 287 1% .125W F TC=0+-100	24546	C4-1/8-T0-287R-F
A3A1A2R33	0698-3443	0		RESISTOR 287 1% .125W F TC=0+-100	24546	C4-1/8-T0-287R-F
A3A1A2R34	0698-3429	2		RESISTOR 19.6 1% .125W F TC=0+-100	03888	PME55-1/8-T0-19R6-F
A3A1A2R35	0698-3443	0		RESISTOR 287 1% .125W F TC=0+-100	24546	C4-1/8-T0-287R-F
A3A1A2R36	0698-3150	6		RESISTOR 2.37K 1% .125W F TC=0+-100	24546	C4-1/8-T0-2371-F
A3A1A2R37	0757-0422	5		RESISTOR 909 1% .125W F TC=0+-100	24546	C4-1/8-T0-909R-F
A3A1A2R38	0757-0401	0		RESISTOR 100 1% .125W F TC=0+-100	24546	C4-1/8-T0-101-F
A3A1A2R39	0698-3150	6		RESISTOR 2.37K 1% .125W F TC=0+-100	24546	C4-1/8-T0-2371-F
A3A1A2R40	0757-0416	7		RESISTOR 511 1% .125W F TC=0+-100	24546	C4-1/8-T0-511R-F
A3A1A2R41	0757-0394	0		RESISTOR 51.1 1% .125W F TC=0+-100	24546	C4-1/8-T0-51R1-F
A3A1A2R42	0698-0084	9	7	RESISTOR 2.15K 1% .125W F TC=0+-100	24546	C4-1/8-T0-2151-F
A3A1A2R43	0698-3155	1		RESISTOR 4.64K 1% .125W F TC=0+-100	24546	C4-1/8-T0-4641-F
A3A1A2R44	0698-0084	9		RESISTOR 2.15K 1% .125W F TC=0+-100	24546	C4-1/8-T0-2151-F
A3A1A2R45	0698-0084	9		RESISTOR 2.15K 1% .125W F TC=0+-100	24546	C4-1/8-T0-2151-F
A3A1A2R46	0757-0279	0		RESISTOR 3.16K 1% .125W F TC=0+-100	24546	C4-1/8-T0-3161-F
A3A1A2R47	0757-0439	4	3	RESISTOR 6.81K 1% .125W F TC=0+-100	24546	C4-1/8-T0-6811-F
A3A1A2R48	0757-0416	7		RESISTOR 511 1% .125W F TC=0+-100	24546	C4-1/8-T0-511R-F
A3A1A2R49	0757-0279	0		RESISTOR 3.16K 1% .125W F TC=0+-100	24546	C4-1/8-T0-3161-F
A3A1A2R50	0757-0439	4		RESISTOR 6.81K 1% .125W F TC=0+-100	24546	C4-1/8-T0-6811-F
A3A1A2R51	0757-0416	7		RESISTOR 511 1% .125W F TC=0+-100	24546	C4-1/8-T0-511R-F
A3A1A2R52	0757-0280	3		RESISTOR 1K 1% .125W F TC=0+-100	24546	C4-1/8-T0-1001-F
A3A1A2R53	0757-0394	0		RESISTOR 51.1 1% .125W F TC=0+-100	24546	C4-1/8-T0-51R1-F
A3A1A2R54	0757-0394	0		RESISTOR 51.1 1% .125W F TC=0+-100	24546	C4-1/8-T0-51R1-F
A3A1A2R55	0757-0422	5		RESISTOR 909 1% .125W F TC=0+-100	24546	C4-1/8-T0-909R-F
A3A1A2R56	0698-3150	6		RESISTOR 2.37K 1% .125W F TC=0+-100	24546	C4-1/8-T0-2371-F
A3A1A2R57	0757-0401	0		RESISTOR 100 1% .125W F TC=0+-100	24546	C4-1/8-T0-101-F
A3A1A2R58	0757-0401	0		RESISTOR 100 1% .125W F TC=0+-100	24546	C4-1/8-T0-101-F
A3A1A2R59	0698-3150	6		RESISTOR 2.37K 1% .125W F TC=0+-100	24546	C4-1/8-T0-2371-F
A3A1A2R60	0757-0280	3		RESISTOR 1K 1% .125W F TC=0+-100	24546	C4-1/8-T0-1001-F
A3A1A2R61	0698-3441	8	2	RESISTOR 215 1% .125W F TC=0+-100	24546	C4-1/8-T0-215R-F
A3A1A2R62	0757-0401	0		RESISTOR 100 1% .125W F TC=0+-100	24546	C4-1/8-T0-101-F
A3A1A2R63				NOT ASSIGNED		
A3A1A2R64				NOT ASSIGNED		
A3A1A2R65				NOT ASSIGNED		
A3A1A2R66				NOT ASSIGNED		
A3A1A2R67	0757-0402	1	3	RESISTOR 110 1% .125W F TC=0+-100	24546	C4-1/8-T0-111-F
A3A1A2R68	0757-0276	7		RESISTOR 61.9 1% .125W F TC=0+-100	24546	C4-1/8-T0-6192-F
A3A1A2R69	0757-0402	1		RESISTOR 110 1% .125W F TC=0+-100	24546	C4-1/8-T0-111-F
A3A1A2T1	08553-6012	5	3	TRANSFORMER-RF, BLUE	28480	08553-6012
A3A1A2T2	08553-6012	5		TRANSFORMER-RF, BLUE	28480	08553-6012
A3A1A2T3	08553-6012	5		TRANSFORMER-RF, BLUE	28480	08553-6012
A3A1A2TP1	1251-0600	0		CONNECTOR-SGL CONT PIN 1.14-MM-BSC-SZ SQ	28480	1251-0600
A3A1A2TP2	1251-0600	0		CONNECTOR-SGL CONT PIN 1.14-MM-BSC-SZ SQ	28480	1251-0600
A3A1A2TP3	1251-0600	0		CONNECTOR-SGL CONT PIN 1.14-MM-BSC-SZ SQ	28480	1251-0600
A3A1A2TP4	1251-0600	0		CONNECTOR-SGL CONT PIN 1.14-MM-BSC-SZ SQ	20480	1251-0600

See introduction to this section for ordering information
*Indicates factory selected value

Table 6-3. Replaceable Parts

Reference Designation	HP Part Number	C D	Qty	Description	Mfr Code	Mfr Part Number
A3A1A2W1	86701-60031	7	1	CABLE ASSEMBLY-GRAY/RED/WHITE	28480	86701-60031
A3A1A2Y1	0410-1086	5	1	CRYSTAL-QUARTZ 100.00 MHZ HC-35/U-HLDR	28480	0410-1086
A3A1A3	86701-60077	1	1	M/N PHASE DETECTOR ASSEMBLY	28480	86701-60077
A3A1A3C1	0160-4299	7		CAPACITOR-FXD 2200PF +-20% 250VDC CER	56289	C067F251F222MS22-CDH
A3A1A3C2	0160-4299	7		CAPACITOR-FXD 2200PF +-20% 250VDC CER	56289	C067F251F222MS22-CDH
A3A1A3C3	0160-4299	7		CAPACITOR-FXD 2200PF +-20% 250VDC CER	56289	C067F251F222MS22-CDH
A3A1A3C4	0180-1731	8	5	CAPACITOR-FXD 4.7UF+-10% 50VDC TA	56289	150D475X9050B2
A3A1A3C5	0160-0157	8	2	CAPACITOR-FXD 4700PF +-10% 200VDC POLYE	28480	0160-0157
A3A1A3C6	0160-0161	4	4	CAPACITOR-FXD .01UF +-10% 200VDC POLYE	28480	0160-0161
A3A1A3C7	0160-0157	8		CAPACITOR-FXD 4700PF +-10% 200VDC POLYE	28480	0160-0157
A3A1A3C8	0160-3535	2	2	CAPACITOR-FXD 560PF +-5% 300VDC MICA	28480	0160-3535
A3A1A3C9	0160-3535	2		CAPACITOR-FXD 560PF +-5% 300VDC MICA	28480	0160-3535
A3A1A3C10	0160-0161	4		CAPACITOR-FXD .01UF +-10% 200VDC POLYE	28480	0160-0161
A3A1A3C11	0160-4299	7		CAPACITOR-FXD 2200PF +-20% 250VDC CER	56289	C067F251F222MS22-CDH
A3A1A3C12	0160-4299	7		CAPACITOR-FXD 2200PF +-20% 250VDC CER	56289	C067F251F222MS22-CDH
A3A1A3C13	0160-4299	7		CAPACITOR-FXD 2200PF +-20% 250VDC CER	56289	C067F251F222MS22-CDH
A3A1A3C14	0160-2406	4	1	CAPACITOR-FXD .27UF +-10% 80VDC POLYE	28480	0160-2406
A3A1A3C15	0160-3877	5	2	CAPACITOR-FXD 100PF +-20% 200VDC CER	28480	0160-3877
A3A1A3C16	0140-0196	3	1	CAPACITOR-FXD 150PF +-5% 300VDC MICA	72136	DM15F151J0300WV1CR
A3A1A3C17	0160-2204	0		CAPACITOR-FXD 100PF +-5% 300VDC MICA	28480	0160-2204
A3A1A3C18	0160-4299	7		CAPACITOR-FXD 2200PF +-20% 250VDC CER	56289	C067F251F222MS22-CDH
A3A1A3C19	0160-4299	7		CAPACITOR-FXD 2200PF +-20% 250VDC CER	56289	C067F251F222MS22-CDH
A3A1A3C20	0160-3879	7		CAPACITOR-FXD .01UF +-20% 100VDC CER	28480	0160-3879
A3A1A3C21	0160-4299	7		CAPACITOR-FXD 2200PF +-20% 250VDC CER	56289	C067F251F222MS22-CDH
A3A1A3C22	0160-4299	7		CAPACITOR-FXD 2200PF +-20% 250VDC CER	56289	C067F251F222MS22-CDH
A3A1A3C23	0160-3879	7		CAPACITOR-FXD .01UF +-20% 100VDC CER	28480	0160-3879
A3A1A3C24	0180-0291	3	1	CAPACITOR-FXD 1UF+-10% 35VDC TA	56289	150D105X9035A2
A3A1A3C25	0180-0197	8		CAPACITOR-FXD 2.2UF+-10% 20VDC TA	56289	150D225X9020A2
A3A1A3C26	0160-3878	6		CAPACITOR-FXD 1000PF +-20% 100VDC CER	28480	0160-3878
A3A1A3L1	9100-1641	0	7	INDUCTOR RF-CH-MLD 240UH 5% .166DX.385LG	28480	9100-1641
A3A1A3L2	9100-2259	8	2	INDUCTOR RF-CH-MLD 1.5UH 10% .105DX.26LG	28480	9100-2259
A3A1A3L3	9100-1641	0		INDUCTOR RF-CH-MLD 240UH 5% .166DX.385LG	28480	9100-1641
A3A1A3L4	9100-2562	6	2	INDUCTOR RF-CH-MLD 100UH 10%	28480	9100-2562
A3A1A3L5	9100-2562	6		INDUCTOR RF-CH-MLD 100UH 10%	28480	9100-2562
A3A1A3MP1	0520-0128	7	3	SCREW-MACH 2-56 .25-IN-LG PAN-HD-POZI	00000	ORDER BY DESCRIPTION
A3A1A3MP2	0520-0129	8	1	SCREW-MACH 2-56 .312-IN-LG PAN-HD-POZI	00000	ORDER BY DESCRIPTION
A3A1A3MP3	0590-0533	5	1	THREADED INSERT-NUT 2-56 .06-IN-LG SST	28480	0590-0533
A3A1A3MP4	1205-0285	0	1	HEAT SINK SGL DIP	28480	1205-0285
A3A1A3MP5	2190-0014	1	2	WASHER-LK INTL T NO. 2 .089-IN-ID	28480	2190-0014
A3A1A3MP6	2190-0124	4		WASHER-LK INTL T NO. 10 .195-IN-ID	28480	2190-0124
A3A1A3MP7	2200-0101	0		SCREW-MACH 4-40 .188-IN-LG PAN-HD-POZI	00000	ORDER BY DESCRIPTION
A3A1A3MP8	2200-0103	2	2	SCREW-MACH 4-40 .25-IN-LG PAN-HD-POZI	00000	ORDER BY DESCRIPTION
A3A1A3MP9	2950-0078	9		NUT-HEX-DBL-CHAM 10-32-THD .067-IN-THK	28480	2950-0078
A3A1A3MP10	6040-0239	9		LUBRICANT-GREASE SIL	05820	120
A3A1A3MP11	86701-00032	2	1	BRACKET-HEAT SINK	28480	86701-00032
A3A1A3MP12	86701-00033	3	1	BRACKET-HS	28480	86701-00033
A3A1A3MP13	86701-20038	0	1	COVER-P.C. M/N DETECTOR	28480	86701-20038
A3A1A3MP14	86701-40001	9		EXTRACTOR-P.C. BOARD	28480	86701-40001
A3A1A3Q1	1853-0451	5		TRANSISTOR PNP 2N3799 SI TO-18 PD=360MW	01295	2N3799
A3A1A3Q2	1853-0451	5		TRANSISTOR PNP 2N3799 SI TO-18 PD=360MW	01295	2N3799
A3A1A3R1	0698-3154	0		RESISTOR 4.22K 1% .125W F TC=0+-100	24546	C4-1/8-T0-4221-F
A3A1A3R2	0698-3154	0		RESISTOR 4.22K 1% .125W F TC=0+-100	24546	C4-1/8-T0-4221-F
A3A1A3R3				NOT ASSIGNED		
A3A1A3R4	0698-7212	9	12	RESISTOR 100 1% .05W F TC=0+-100	24546	C3-1/8-T0-100R-F
A3A1A3R5	0698-7219	6		RESISTOR 196 1% .05W F TC=0+-100	24546	C3-1/8-T0-196R-F
A3A1A3R6				NOT ASSIGNED		
A3A1A3R7	0698-7219	6		RESISTOR 196 1% .05W F TC=0+-100	24546	C3-1/8-T0-196R-F
A3A1A3R8	0698-7212	9		RESISTOR 100 1% .05W F TC=0+-100	24546	C3-1/8-T0-100R-F
A3A1A3R9	0698-7236	7		RESISTOR 1K 1% .05W F TC=0+-100	24546	C3-1/8-T0-1001-F
A3A1A3R10	0698-7236	7		RESISTOR 1K 1% .05W F TC=0+-100	24546	C3-1/8-T0-1001-F
A3A1A3R11	0698-3154	0		RESISTOR 4.22K 1% .125W F TC=0+-100	24546	C4-1/8-T0-4221-F
A3A1A3R12	0757-0438	3		RESISTOR 5.11K 1% .125W F TC=0+-100	24546	C4-1/8-T0-5111-F
A3A1A3R13	0698-3260	9	1	RESISTOR 464K 1% .125W F TC=0+-100	28480	0698-3260
A3A1A3R14	0757-0416	7		RESISTOR 511 1% .125W F TC=0+-100	24546	C4-1/8-T0-511R-F
A3A1A3R15	0757-0416	7		RESISTOR 511 1% .125W F TC=0+-100	24546	C4-1/8-T0-511R-F
A3A1A3R16	0757-0442	9		RESISTOR 10K 1% .125W F TC=0+-100	24546	C4-1/8-T0-1002-F
A3A1A3R17	0757-0401	0		RESISTOR 100 1% .125W F TC=0+-100	24546	C4-1/8-T0-101-F
A3A1A3R18	0757-0401	0		RESISTOR 100 1% .125W F TC=0+-100	24546	C4-1/8-T0-101-F
A3A1A3R19	0757-0438	3		RESISTOR 5.11K 1% .125W F TC=0+-100	24546	C4-1/8-T0-5111-F
A3A1A3R20	0698-3157	3		RESISTOR 19.6K 1% .125W F TC=0+-100	24546	C4-1/8-T0-1962-F
A3A1A3R21	0757-0438	3		RESISTOR 5.11K 1% .125W F TC=0+-100	24546	C4-1/8-T0-5111-F
A3A1A3R22	0698-3154	0		RESISTOR 4.22K 1% .125W F TC=0+-100	24546	C4-1/8-T0-4221-F
A3A1A3R23	0698-3450	9		RESISTOR 42.2K 1% .125W F TC=0+-100	24546	C4-1/8-T0-4222-F
A3A1A3R24	0698-3450	9		RESISTOR 42.2K 1% .125W F TC=0+-100	24546	C4-1/8-T0-4222-F
A3A1A3R25	0698-0083	8	14	RESISTOR 1.96K 1% .125W F TC=0+-100	24546	C4-1/8-T0-1961-F

See introduction to this section for ordering information
*Indicates factory selected value

Table 6-3. Replaceable Parts

Reference Designation	HP Part Number	C D	Qty	Description	Mfr Code	Mfr Part Number
A3A1A3R26	0757-0401	0		RESISTOR 100 1% .125W F TC=0+-100	24546	C4-1/8-T0-101-F
A3A1A3R27	0757-0438	3		RESISTOR 5.11K 1% .125W F TC=0+-100	24546	C4-1/8-T0-5111-F
A3A1A3R28	0757-0438	3		RESISTOR 5.11K 1% .125W F TC=0+-100	24546	C4-1/8-T0-5111-F
A3A1A3TP1	1251-0600	0		CONNECTOR-SGL CONT PIN 1.14-MM-BSC-SZ SQ	28480	1251-0600
A3A1A3TP2	1251-0600	0		CONNECTOR-SGL CONT PIN 1.14-MM-BSC-SZ SQ	28480	1251-0600
A3A1A3TP3	1251-0600	0		CONNECTOR-SGL CONT PIN 1.14-MM-BSC-SZ SQ	28480	1251-0600
A3A1A3TP4	1251-0600	0		CONNECTOR-SGL CONT PIN 1.14-MM-BSC-SZ SQ	28480	1251-0600
A3A1A3TP5	1251-0600	0		CONNECTOR-SGL CONT PIN 1.14-MM-BSC-SZ SQ	28480	1251-0600
A3A1A3TP6	1251-0600	0		CONNECTOR-SGL CONT PIN 1.14-MM-BSC-SZ SQ	28480	1251-0600
A3A1A3TP7	1251-0600	0		CONNECTOR-SGL CONT PIN 1.14-MM-BSC-SZ SQ	28480	1251-0600
A3A1A3TP8	1251-0600	0		CONNECTOR-SGL CONT PIN 1.14-MM-BSC-SZ SQ	28480	1251-0600
A3A1A3TP9	1251-0600	0		CONNECTOR-SGL CONT PIN 1.14-MM-BSC-SZ SQ	28480	1251-0600
A3A1A3TP10	1251-0600	0		CONNECTOR-SGL CONT PIN 1.14-MM-BSC-SZ SQ	28480	1251-0600
A3A1A3TP11	1251-0600	0		CONNECTOR-SGL CONT PIN 1.14-MM-BSC-SZ SQ	28480	1251-0600
A3A1A3U1	1820-1344	8	2	IC PL LOOP 14-DIP-C PKG	04713	MC12040L
A3A1A3U2	1820-1225	4	2	IC FF ECL D-M/S DUAL	04713	MC10231P
A3A1A3U3	1820-0802	1		IC GATE ECL NOR QUAD 2-INP	04713	MC10102P
A3A1A3U4	1820-0820	3	2	IC FF ECL J-BAR K-BAR COM CLOCK DUAL	04713	MC10135L
A3A1A3U5	1810-0251	3	3	NETWORK-RES 10-SIP MULTI-VALUE	28480	1810-0251
A3A1A3U6	1810-0204	6	7	NETWORK-RES 8-SIP1.0K OHM X 7	01121	208A102
A3A1A3U7	1826-0092	3	4	IC OP AMP GP DUAL TO-99 PKG	28480	1826-0092
A3A1A3U8	1820-0821	4	2	IC CNTR ECL BIN UP/DOWN SYNCHRO	04713	MC10136L
A3A1A3U9	1810-0204	6		NETWORK-RES 8-SIP1.0K OHM X 7	01121	208A102
A3A1A3U10	1810-0204	6		NETWORK-RES 8-SIP1.0K OHM X 7	01121	208A102
A3A1A3U11	1820-0806	5	2	IC GATE ECL OR-NOR DUAL 4-5-INP	04713	MC10109P
A3A1A3U12	1820-0802	1		IC GATE ECL NOR QUAD 2-INP	04713	MC10102P
A3A1A3U13	1820-1225	4		IC FF ECL D-M/S DUAL	04713	MC10231P
A3A1A3U14	1810-0251	3		NETWORK-RES 10-SIP MULTI-VALUE	28480	1810-0251
A3A1A3U15	1826-0059	2	1	IC OP AMP GP TO-99 PKG	01295	LM201AL
A3A1A3U16	1810-0204	6		NETWORK-RES 8-SIP1.0K OHM X 7	01121	208A102
A3A1A3U17	1820-0802	1		IC GATE ECL NOR QUAD 2-INP	04713	MC10102P
A3A1A3U18	1820-0820	3		IC FF ECL J-BAR K-BAR COM CLOCK DUAL	04713	MC10135L
A3A1A3U19	1820-0821	4		IC CNTR ECL BIN UP/DOWN SYNCHRO	04713	MC10136L
A3A1A3U20	1810-0204	6		NETWORK-RES 8-SIP1.0K OHM X 7	01121	208A102
A3A1A3U21	1810-0204	6		NETWORK-RES 8-SIP1.0K OHM X 7	01121	208A102
A3A1A3U22	1810-0251	3		NETWORK-RES 10-SIP MULTI-VALUE	28480	1810-0251
A3A1A3U23	1820-0806	5		IC GATE ECL OR-NOR DUAL 4-5-INP	04713	MC10109P
A3A1A3U24	1820-0802	1		IC GATE ECL NOR QUAD 2-INP	04713	MC10102P
A3A1A3VR1	1902-3082	9		DIODE-ZNR 4.64V 5% DO-35 PD=.4W	28480	1902-3082
A3A1A3W1	86701-60051	1	1	CABLE ASSEMBLY- WHITE/RED	28480	86701-60051
A3A1A3W2	86701-60060	2	1	CABLE ASSEMBLY-GRAY/WHITE	28480	86701-60060
A3A1A4	86701-60065	7	1	M/N VCO ASSEMBLY	28480	86701-60065
A3A1A4	86701-60071	5	1	M/N VCO ASSEMBLY (RESTORED 86701-60065)	28480	86701-60071
A3A1A4MP1	0380-0020	0	1	SPACER-RND .25-IN-LG .128-IN-ID	00000	ORDER BY DESCRIPTION
A3A1A4MP2	0520-0128	7		SCREW-MACH 2-56 .25-IN-LG PAN-HD-POZI	00000	ORDER BY DESCRIPTION
A3A1A4MP3	0520-0133	4	1	SCREW-MACH 2-56 .5-IN-LG PAN-HD-POZI	00000	ORDER BY DESCRIPTION
A3A1A4MP4	0510-0003	6	1	THREADED INSERT-NUT 8-32 .094-IN-LG STL	28480	0510-0003
A3A1A4MP5	2190-0045	8	1	WASHER-LK HLCL NO. 2 .088-IN-ID	28480	2190-0045
A3A1A4MP6	3050-0672	2	1	WASHER-SHLDR NO. 4 .118-IN-ID .25-IN-OD	28480	3050-0672
A3A1A4MP7	86701-20046	0	1	PROBE	28480	86701-20046
A3A1A4MP8	86701-20047	1	1	SUPPPORT-RESONATOR	28480	86701-20047
A3A1A4A1	86701-60029	3	1	VCO RESONATOR ASSEMBLY	28480	86701-60029
A3A1A4A2	86701-60027	1	1	BOARD ASSEMBLY-M/C VCO	28480	86701-60027
A3A1A4A2C1	0160-3878	6		CAPACITOR-FXD 1000PF +-20% 100VDC CER	28480	0160-3878
A3A1A4A2C2	0160-3878	6		CAPACITOR-FXD 1000PF +-20% 100VDC CER	28480	0160-3878
A3A1A4A2C3	0160-3879	7		CAPACITOR-FXD .01UF +-20% 100VDC CER	28480	0160-3879
A3A1A4A2C4	0160-3878	6		CAPACITOR-FXD 1000PF +-20% 100VDC CER	28480	0160-3878
A3A1A4A2C5	0180-0116	1		CAPACITOR-FXD 6.8UF+-10% 35VDC TA	56289	150D685X9035B2
A3A1A4A2C6	0160-3878	6		CAPACITOR-FXD 1000PF +-20% 100VDC CER	28480	0160-3878
A3A1A4A2C7	0160-3878	6		CAPACITOR-FXD 1000PF +-20% 100VDC CER	28480	0160-3878
A3A1A4A2C8	0160-3873	1	1	CAPACITOR-FXD 4.7PF +-.5PF 200VDC CER	28480	0160-3873
A3A1A4A2C9	0160-3878	6		CAPACITOR-FXD 1000PF +-20% 100VDC CER	28480	0160-3878
A3A1A4A2C10	0160-3879	7		CAPACITOR-FXD .01UF +-20% 100VDC CER	28480	0160-3879
A3A1A4A2C11	0180-2161	0	1	CAPACITOR-FXD .75UF+-10% 50VDC TA	56289	150D754X9050A2
A3A1A4A2L1	9100-2891	4	7	INDUCTOR RF-CH-MLD 50NH 10% .105DX.26LG	28480	9100-2891
A3A1A4A2L2	9100-2891	4		INDUCTOR RF-CH-MLD 50NH 10% .105DX.26LG	28480	9100-2891
A3A1A4A2L3	86701-20051	7	1	INDUCTOR	28480	86701-20051
A3A1A4A2L4	9140-0158	6		INDUCTOR RF-CH-MLD 1UH 10% .105DX.26LG	28480	9140-0158
A3A1A4A2Q1	1854-0610	0	1	TRANSISTOR NPN SI TO-46 FT=800MHZ	28480	1854-0610
A3A1A4A2Q2	1854-0686	0	1	TRANSISTOR NPN SI TO-72 PD=200MW FT=4GHZ	28480	1854-0686
A3A1A4A2R1	0757-0280	3		RESISTOR 1K 1% .125W F TC=0+-100	24546	C4-1/8-T0-1001-F
A3A1A4A2R2	0698-7219	6		RESISTOR 196 1% .05W F TC=0+-100	24546	C3-1/8-T0-196R-F

See introduction to this section for ordering information
*Indicates factory selected value

Table 6-3. Replaceable Parts

Reference Designation	HP Part Number	C D	Qty	Description	Mfr Code	Mfr Part Number
A3A1A4A2R3	0698-7193	5	1	RESISTOR 16.2 1% .05W F TC=0+-100	24546	C3-1/8-T0-16R2-F
A3A1A4A2R4	0698-3154	0		RESISTOR 4.22K 1% .125W F TC=0+-100	24546	C4-1/8-T0-4221-F
A3A1A4A2R5	0757-0428	1	6	RESISTOR 1.62K 1% .125W F TC=0+-100	24546	C4-1/8-T0-1621-F
A3A1A4A2R6	0698-7262	9	1	RESISTOR 12.1K 1% .05W F TC=0+-100	24546	C3-1/8-T0-1212-F
A3A1A4A2R7	0757-0428	1		RESISTOR 1.62K 1% .125W F TC=0+-100	24546	C4-1/8-T0-1621-F
A3A1A4A2R8	0698-7254	9	1	RESISTOR 5.62K 1% .05W F TC=0+-100	24546	C3-1/8-T0-5621-F
A3A1A4A2R9	0698-7205	0	5	RESISTOR 51.1 1% .05W F TC=0+-100	24546	C3-1/8-T0-51R1-F
A3A1A4A2R10	0698-7265	2	1	RESISTOR 16.2K 1% .05W F TC=0+-100	24546	C3-1/8-T0-1622-F
A3A1A4A2R11	0698-7250	5	1	RESISTOR 3.83K 1% .05W F TC=0+-100	24546	C3-1/8-T0-3831-F
A3A1A4A2R12	0757-0401	0		RESISTOR 100 1% .125W F TC=0+-100	24546	C4-1/8-T0-101-F
A3A1A4A2R13	0757-0400	9	1	RESISTOR 90.9 1% .125W F TC=0+-100	24546	C4-1/8-T0-90R9-F
A3A1A4A2TP1	1251-0600	0		CONNECTOR-SGL CONT PIN 1.14-MM-BSC-GZ SQ	28480	1251-0600
A3A1A4A2W1	86701-60058	8	1	CABLE ASSEMBLY-VCO OUTPUT	28480	86701-60058
A3A1A4A2W2	86701-20050	6	1	CABLE- S/R JUMPER	28480	86701-20050
A3A1A4A2MP1	0590-0526	6	3	THREADED INSERT-NUT 4-40 .065-IN-LG SST	28480	0590-0526
A3A1A4A2MP2	86701-20052	8	1	SPACER-INSULATOR	28480	86701-20052
A3A1A5 .	86701-60018	0	1	M/N OUTPUT ASSEMBLY	28480	86701-60018
A3A1A5C1	0160-3878	6		CAPACITOR-FXD 1000PF +-20% 100VDC CER	28480	0160-3878
A3A1A5C2	0160-3878	6		CAPACITOR-FXD 1000PF +-20% 100VDC CER	28480	0160-3878
A3A1A5C3	0160-2255	1	1	CAPACITOR-FXD 8.2PF +-.25PF 500VDC CER	28480	0160-2255
A3A1A5C4	0160-3878	6		CAPACITOR-FXD 1000PF +-20% 100VDC CER	28480	0160-3878
A3A1A5C5	0160-3878	6		CAPACITOR-FXD 1000PF +-20% 100VDC CER	28480	0160-3878
A3A1A5C6				NOT ASSIGNED		
A3A1A5C7	0160-3878	6		CAPACITOR-FXD 1000PF +-20% 100VDC CER	28480	0160-3878
A3A1A5C8	0140-0192	9	2	CAPACITOR-FXD 68PF +-5% 300VDC MICA	72136	DM15E680J0300WV1CR
A3A1A5C9	0160-2204	0		CAPACITOR-FXD 100PF +-5% 300VDC MICA	28480	0160-2204
A3A1A5C10	0160-2055	9		CAPACITOR-FXD .01UF +80-20% 100VDC CER	28480	0160-2055
A3A1A5C11	0160-3879	7		CAPACITOR-FXD .01UF +-20% 100VDC CER	28480	0160-3879
A3A1A5C12	0160-3879	7		CAPACITOR-FXD .01UF +-20% 100VDC CER	28480	0160-3879
A3A1A5C13	0160-3879	7		CAPACITOR-FXD .01UF +-20% 100VDC CER	28480	0160-3879
A3A1A5C14	0160-3878	6		CAPACITOR-FXD 1000PF +-20% 100VDC CER	28480	0160-3878
A3A1A5C15	0160-2055	9		CAPACITOR-FXD .01UF +80-20% 100VDC CER	28480	0160-2055
A3A1A5C16	0160-3878	6		CAPACITOR-FXD 1000PF +-20% 100VDC CER	28480	0160-3878
A3A1A5C17	0160-3878	6		CAPACITOR-FXD 1000PF +-20% 100VDC CER	28480	0160-3878
A3A1A5C18	0160-2257	3		CAPACITOR-FXD 10PF +-5% 500VDC CER 0+-60	28480	0160-2257
A3A1A5C19	0160-2199	2		CAPACITOR-FXD 30PF +-5% 300VDC MICA	28480	0160-2199
A3A1A5C20	0160-3878	6		CAPACITOR-FXD 1000PF +-20% 100VDC CER	28480	0160-3878
A3A1A5C21	0160-3878	6		CAPACITOR-FXD 1000PF +-20% 100VDC CER	28480	0160-3878
A3A1A5C22	0160-2266	4	1	CAPACITOR-FXD 24PF +-5% 500VDC CER 0+-30	28480	0160-2266
A3A1A5C23				NOT ASSIGNED		
A3A1A5C24	0160-0161	4		CAPACITOR-FXD .01UF +-10% 200VDC POLYE	28480	0160-0161
A3A1A5C25	0160-0153	4	1	CAPACITOR-FXD 1000PF +-10% 200VDC POLYE	28480	0160-0153
A3A1A5C26	0160-0161	4		CAPACITOR-FXD .01UF +-10% 200VDC POLYE	28480	0160-0161
A3A1A5C27	0160-3534	1	1	CAPACITOR-FXD 510PF +-5% 100VDC MICA	28480	0160-3534
A3A1A5C28	0160-0298	8	1	CAPACITOR-FXD 1500PF +-10% 200VDC POLYE	28480	0160-0298
A3A1A5C29	0180-0197	8		CAPACITOR-FXD 2.2UF+-10% 20VDC TA	56289	150D225X9020A2
A3A1A5C30	0160-2055	9		CAPACITOR-FXD .01UF +80-20% 100VDC CER	28480	0160-2055
A3A1A5C31	0180-0197	8		CAPACITOR-FXD 2.2UF+-10% 20VDC TA	56289	150D225X9020A2
A3A1A5C32	0160-3878	6		CAPACITOR-FXD 1000PF +-20% 100VDC CER	28480	0160-3878
A3A1A5C33	0160-3878	6		CAPACITOR-FXD 1000PF +-20% 100VDC CER	28480	0160-3878
A3A1A5C34	0160-3878	6		CAPACITOR-FXD 1000PF +-20% 100VDC CER	28480	0160-3878
A3A1A5C35	0160-3878	6		CAPACITOR-FXD 1000PF +-20% 100VDC CER	28480	0160-3878
A3A1A5C36	0140-0192	9		CAPACITOR-FXD 68PF +-5% 300VDC MICA	72136	DM15E680J0300WV1CR
A3A1A5C37	0160-4351	2	1	CAPACITOR-FDTHRU 1000PF 20% 200V CER	28480	0160-4351
A3A1A5C38*	0160-2306	3	1	CAPACITOR-FXD 27PF +-5% 300VDC MICA	28480	0160-2306
A3A1A5J1	1250-0657	5	3	CONNECTOR-RF SMB M SGL-HOLE-FR 50-OHM	28480	1250-0657
A3A1A5J2	1250-0657	5		CONNECTOR-RF SMB M SGL-HOLE-FR 50-OHM	28480	1250-0657
A3A1A5J3	1250-0657	5		CONNECTOR-RF SMB M SGL-HOLE-FR 50-OHM	28480	1250-0657
A3A1A5J4	1250-1255	1	1	CONNECTOR-RF SMB M PC 50-OHM	28480	1250-1255
A3A1A5L1	9100-2891	4		INDUCTOR RF-CH-MLD 50NH 10% .105DX.26LG	28480	9100-2891
A3A1A5L2	9100-2891	4		INDUCTOR RF-CH-MLD 50NH 10% .105DX.26LG	28480	9100-2891
A3A1A5L3				NOT ASSIGNED		
A3A1A5L4	9100-2248	5	2	INDUCTOR RF-CH-MLD 120NH 10% .105DX.26LG	28480	9100-2248
A3A1A5L5	9100-2891	4		INDUCTOR RF-CH-MLD 50NH 10% .105DX.26LG	28480	9100-2891
A3A1A5L6	9100-1635	2	1	INDUCTOR RF-CH-MLD 91UH 5% .166DX.385LG	28480	9100-1635
A3A1A5L7	9100-1634	1	1	INDUCTOR RF-CH-MLD 75UH 5% .166DX.385LG	28480	9100-1634
A3A1A5L8	9100-1620	5	4	INDUCTOR RF-CH-MLD 15UH 10% .166DX.385LG	28480	9100-1620
A3A1A5L9	9140-0210	1	1	INDUCTOR RF-CH-MLD 100UH 5% .166DX.385LG	28480	9140-0210
A3A1A5L10	9100-2891	4		INDUCTOR RF-CH-MLD 50NH 10% .105DX.26LG	28480	9100-2891
A3A1A5L11	9100-2248	5		INDUCTOR RF-CH-MLD 120NH 10% .105DX.26LG	28480	9100-2248
A3A1A5MP1	0360-0452	0	1	TERMINAL-SLDR LUG PL-MTG FOR-#10-SCR	28480	0360-0452
A3A1A5MP2	2190-0009	4		WASHER-LK INTL T NO. 8 .168-IN-ID	28480	2190-0009
A3A1A5MP3	2190-0124	4		WASHER-LK INTL T NO. 10 .195-IN-ID	28480	2190-0124
A3A1A5MP4	2200-0101	0		SCREW-MACH 4-40 .188-IN-LG PAN-HD-POZI	00000	ORDER BY DESCRIPTION
A3A1A5MP5	2200-0103	2		SCREW-MACH 4-40 .25-IN-LG PAN-HD-POZI	00000	ORDER BY DESCRIPTION

See introduction to this section for ordering information
*Indicates factory selected value

Table 6-3. Replaceable Parts

Reference Designation	HP Part Number	C D	Qty	Description	Mfr Code	Mfr Part Number
A3A1A5MP6	2200-0167	8	1	SCREW-MACH 4-40 .375-IN-LG 82 DEG	00000	ORDER BY DESCRIPTION
A3A1A5MP7	2580-0002	4		NUT-HEX-DBL-CHAM 8-32-THD .085-IN-THK	00000	ORDER BY DESCRIPTION
A3A1A5MP8	86701-20056	2	1	COVER (BOTTOM)	28480	86701-20056
A3A1A5MP9	86701-00041	3	1	COVER (TOP)	28480	86701-00041
A3A1A5MP10	86701-40001	9		EXTRACTOR-P.C. BOARD	28480	86701-40001
A3A1A5MP11	86701-20037	9	1	COVER-P.C. M/N MOUNT	28480	86701-20037
A3A1A5MP12	86701-20057	3	1	SHIELD-HOUSING	28480	86701-20057
A3A1A5MP13	5001-0176	0	1	GROUND STRAP	28480	5001-0176
A3A1A5Q1	1854-0345	8		TRANSISTOR NPN 2N5179 SI TO-72 PD=200MW	04713	2N5179
A3A1A5Q2	1853-0015	7	2	TRANSISTOR PNP SI PD=200MW FT=500MHZ	28480	1853-0015
A3A1A5Q3	1854-0345	8		TRANSISTOR NPN 2N5179 SI TO-72 PD=200MW	04713	2N5179
A3A1A5Q4	1854-0345	8		TRANSISTOR NPN 2N5179 SI TO-72 PD=200MW	04713	2N5179
A3A1A5Q5	1854-0546	1	5	TRANSISTOR NPN SI TO-72 PD=200MW	28480	1854-0546
A3A1A5Q6	1854-0546	1		TRANSISTOR NPN SI TO-72 PD=200MW	28480	1854-0546
A3A1A5Q7	1854-0546	1		TRANSISTOR NPN SI TO-72 PD=200MW	28480	1854-0546
A3A1A5Q8	1854-0546	1		TRANSISTOR NPN SI TO-72 PD=200MW	28480	1854-0546
A3A1A5Q9	1854-0546	1		TRANSISTOR NPN SI TO-72 PD=200MW	28480	1854-0546
A3A1A5R1	0698-7212	9		RESISTOR 100 1% .05W F TC=0+-100	24546	C3-1/8-TO-100R-F
A3A1A5R2	0698-7248	1	5	RESISTOR 3.16K 1% .05W F TC=0+-100	24546	C3-1/8-TO-3161-F
A3A1A5R3	0698-7243	6	5	RESISTOR 1.96K 1% .05W F TC=0+-100	24546	C3-1/8-TO-1961-F
A3A1A5R4	0698-7205	0		RESISTOR 51.1 1% .05W F TC=0+-100	24546	C3-1/8-TO-51R1-F
A3A1A5R5	0698-7223	2	3	RESISTOR 287 1% .05W F TC=0+-100	24546	C3-1/8-TO-287R-F
A3A1A5R6	0698-7248	1		RESISTOR 3.16K 1% .05W F TC=0+-100	24546	C3-1/8-TO-3161-F
A3A1A5R7	0698-7243	6		RESISTOR 1.96K 1% .05W F TC=0+-100	24546	C3-1/8-TO-1961-F
A3A1A5R8	0698-7203	8	1	RESISTOR 42.2 1% .05W F TC=0+-100	24546	C3-1/8-TO-42R2-F
A3A1A5R9	0698-7218	5	1	RESISTOR 178 1% .05W F TC=0+-100	24546	C3-1/8-TO-178R-F
A3A1A5R10	0698-7188	8	5	RESISTOR 10 1% .05W F TC=0+-100	24546	C3-1/8-TO-10R-F
A3A1A5R11	0698-7205	0		RESISTOR 51.1 1% .05W F TC=0+-100	24546	C3-1/8-TO-51R1-F
A3A1A5R12	0698-7248	1		RESISTOR 3.16K 1% .05W F TC=0+-100	24546	C3-1/8-TO-3161-F
A3A1A5R13	0698-7243	6		RESISTOR 1.96K 1% .05W F TC=0+-100	24546	C3-1/8-TO-1961-F
A3A1A5R14	0698-7188	8		RESISTOR 10 1% .05W F TC=0+-100	24546	C3-1/8-TO-10R-F
A3A1A5R15	0698-7219	6		RESISTOR 196 1% .05W F TC=0+-100	24546	C3-1/8-TO-196R-F
A3A1A5R16	0698-7188	8		RESISTOR 10 1% .05W F TC=0+-100	24546	C3-1/8-TO-10R-F
A3A1A5R17	0698-7212	9		RESISTOR 100 1% .05W F TC=0+-100	24546	C3-1/8-TO-100R-F
A3A1A5R18	0698-7208	3	1	RESISTOR 68.1 1% .05W F TC=0+-100	24546	C3-1/8-TO-68R1-F
A3A1A5R19	0698-7212	9		RESISTOR 100 1% .05W F TC=0+-100	24546	C3-1/8-TO-100R-F
A3A1A5R20	0698-7222	1		RESISTOR 261 1% .05W F TC=0+-100	24546	C3-1/8-TO-261R-F
A3A1A5R21	0698-7223	2		RESISTOR 287 1% .05W F TC=0+-100	24546	C3-1/8-TO-287R-F
A3A1A5R22	0698-7188	8		RESISTOR 10 1% .05W F TC=0+-100	24546	C3-1/8-TO-10R-F
A3A1A5R23	0698-7229	8	3	RESISTOR 511 1% .05W F TC=0+-100	24546	C3-1/8-TO-511R-F
A3A1A5R24	0698-7212	9		RESISTOR 100 1% .05W F TC=0+-100	24546	C3-1/8-TO-100R-F
A3A1A5R25	0698-7247	0	1	RESISTOR 2.87K 1% .05W F TC=0+-100	24546	C3-1/8-TO-2871-F
A3A1A5R26	0698-7243	6		RESISTOR 1.96K 1% .05W F TC=0+-100	24546	C3-1/8-TO-1961-F
A3A1A5R27	0698-7248	1		RESISTOR 3.16K 1% .05W F TC=0+-100	24546	C3-1/8-TO-3161-F
A3A1A5R28	0698-7229	8		RESISTOR 511 1% .05W F TC=0+-100	24546	C3-1/8-TO-511R-F
A3A1A5R29	0698-7243	6		RESISTOR 1.96K 1% .05W F TC=0+-100	24546	C3-1/8-TO-1961-F
A3A1A5R30	0698-7200	5	1	RESISTOR 31.6 1% .05W F TC=0+-100	24546	C3-1/8-TO-31R6-F
A3A1A5R31	0698-7224	3		RESISTOR 316 1% .05W F TC=0+-100	24546	C3-1/8-TO-316R-F
A3A1A5R32	0698-7188	8		RESISTOR 10 1% .05W F TC=0+-100	24546	C3-1/8-TO-10R-F
A3A1A5R33	0757-0280	3		RESISTOR 1K 1% .125W F TC=0+-100	24546	C4-1/8-TO-1001-F
A3A1A5R34	0757-0279	0		RESISTOR 3.16K 1% .125W F TC=0+-100	24546	C4-1/8-TO-3161-F
A3A1A5R35				NOT ASSIGNED		
A3A1A5R36 *	0698-7206	1	1	RESISTOR 56.2 1% .05W F TC=0+-100	24546	C3-1/8-TO-56R2-F
A3A1A5R36	0698-7210	7	1	RESISTOR 82.5 1% .05W F TC=0+-100	24546	C3-1/8-TO-82R5-F
A3A1A5R37	0698-7223	2		RESISTOR 287 1% .05W F TC=0+-100	24546	C3-1/8-TO-287R-F
A3A1A5R38				NOT ASSIGNED		
A3A1A5R39	0698-7248	1		RESISTOR 3.16K 1% .05W F TC=0+-100	24546	C3-1/8-TO-3161-F
A3A1A5R40 *	0698-7205	0		RESISTOR 51.1 1% .05W F TC=0+-100	24546	C3-1/8-TO-51R1-F
A3A1A5R41 *	0698-7212	9		RESISTOR 100 1% .05W F TC=0+-100	24546	C3-1/8-TO-100R-F
A3A1A5R42	0698-7205	0		RESISTOR 51.1 1% .05W F TC=0+-100	24546	C3-1/8-TO-51R1-F
A3A1A5U1	0955-0063	0	1	MIXER-DOUBLE BALANCE	28480	0955-0063
A3A1A5U2	1820-2642	1	1	IC CNTR ECL BIN DUAL	28480	1820-2642
A3A1A5VR1	1902-3070	5	2	DIODE-ZNR 4.22V 5% DO-35 PD=.4W	28480	1902-3070
A3A1A5VR2	1902-3070	5		DIODE-ZNR 4.22V 5% DO-35 PD=.4W	28480	1902-3070
A3A1A5W1	86701-20055	1	1	JUMPER-COAX	28480	86701-20055
A3A1A6	86701-60022	6	1	M/N REFERENCE MOTHER ASSEMBLY	28480	86701-60022
A3A1A6C1	0160-2437	1		CAPACITOR-FDTHRU 5000PF +80 -20% 200V	28480	0160-2437
A3A1A6C2	0160-2437	1		CAPACITOR-FDTHRU 5000PF +80 -20% 200V	28480	0160-2437
A3A1A6C3	0160-2437	1		CAPACITOR-FDTHRU 5000PF +80 -20% 200V	28480	0160-2437
A3A1A6C4	0160-2437	1		CAPACITOR-FDTHRU 5000PF +80 -20% 200V	28480	0160-2437
A3A1A6C5	0160-2437	1		CAPACITOR-FDTHRU 5000PF +80 -20% 200V	28480	0160-2437

See introduction to this section for ordering information
*Indicates factory selected value

Table 6-3. Replaceable Parts

Reference Designation	HP Part Number	C D	Qty	Description	Mfr Code	Mfr Part Number
A3A1A6C6	0160-2437	1		CAPACITOR-FDTHRU 5000PF +80 -20% 200V	28480	0160-2437
A3A1A6C7	0160-2437	1		CAPACITOR-FDTHRU 5000PF +80 -20% 200V	28480	0160-2437
A3A1A6C8	0160-2437	1		CAPACITOR-FDTHRU 5000PF +80 -20% 200V	28480	0160-2437
A3A1A6C9	0160-2437	1		CAPACITOR-FDTHRU 5000PF +80 -20% 200V	28480	0160-2437
A3A1A6C10	0160-2437	1		CAPACITOR-FDTHRU 5000PF +80 -20% 200V	28480	0160-2437
A3A1A6C11	0160-2437	1		CAPACITOR-FDTHRU 5000PF +80 -20% 200V	28480	0160-2437
A3A1A6C12	0160-2437	1		CAPACITOR-FDTHRU 5000PF +80 -20% 200V	28480	0160-2437
A3A1A6MP1	0360-1514	7	1	TERMINAL-STUD SGL-PIN PRESS-MTG	28480	0360-1514
A3A1A6MP2	2190-0009	4		WASHER-LK INTL T NO. 8 .168-IN-ID	28480	2190-0009
A3A1A6MP3	2580-0002	4		NUT-HEX-DBL-CHAM 8-32-THD .085-IN-THK	00000	ORDER BY DESCRIPTION
A3A1A6MP4	86701-00031	1	1	INSULATOR	28480	86701-00031
A3A1A6MP5	86701-00046	8	1	INSULATOR	28480	86701-00046
A3A1A6XA3A1A	5060-0112	8	2	CONNECTOR-15 CONTACTS	28480	5060-0112
A3A1A6XA3A1B	5060-0112	8		CONNECTOR-15 CONTACTS	28480	5060-0112
A3A1A6XA3A1	1251-4423	3	1	CONNECTOR-PC EDGE 15-CONT/ROW 1-ROW	28480	1251-4423
A3A1A6XA3A1	1251-4174	1	2	CONNECTOR-PC EDGE 15-CONT/ROW 1-ROW	28480	1251-4174
A3A1A6XA3A1	1251-2035	9	3	CONNECTOR-PC EDGE 15-CONT/ROW 2-ROWS	28480	1251-2035
A3A1A6XA3A1	1251-4174	1		CONNECTOR-PC EDGE 15-CONT/ROW 1-ROW	28480	1251-4174
A3A2	08673-60094	3	1	RECTIFIER ASSEMBLY	28480	08673-60094
A3A2C1	0160-2055	9		CAPACITOR-FXD .01UF +80-20% 100VDC CER	28480	0160-2055
A3A2C2	0160-2055	9		CAPACITOR-FXD .01UF +80-20% 100VDC CER	28480	0160-2055
A3A2C3	0160-2055	9		CAPACITOR-FXD .01UF +80-20% 100VDC CER	28480	0160-2055
A3A2C4	0160-4084	8		CAPACITOR-FXD .1UF +-20% 50VDC CER	28480	0160-4084
A3A2C5	0180-0230	0	1	CAPACITOR-FXD 1UF+-20% 50VDC TA	56289	150D105X0050A2
A3A2C6	0160-4084	8		CAPACITOR-FXD .1UF +-20% 50VDC CER	28480	0160-4084
A3A2C7	0180-0197	8		CAPACITOR-FXD 2.2UF+-10% 20VDC TA	56289	150D225X9020A2
A3A2CR1	1901-0662	3	16	DIODE-PWR RECT 100V 6A	04713	MR751
A3A2CR2	1901-0662	3		DIODE-PWR RECT 100V 6A	04713	MR751
A3A2CR3	1901-0662	3		DIODE-PWR RECT 100V 6A	04713	MR751
A3A2CR4	1901-0662	3		DIODE-PWR RECT 100V 6A	04713	MR751
A3A2CR5	1901-0662	3		DIODE-PWR RECT 100V 6A	04713	MR751
A3A2CR6	1901-0662	3		DIODE-PWR RECT 100V 6A	04713	MR751
A3A2CR7	1901-0662	3		DIODE-PWR RECT 100V 6A	04713	MR751
A3A2CR8	1901-0662	3		DIODE-PWR RECT 100V 6A	04713	MR751
A3A2CR9	1901-0662	3		DIODE-PWR RECT 100V 6A	04713	MR751
A3A2CR10	1901-0662	3		DIODE-PWR RECT 100V 6A	04713	MR751
A3A2CR11	1901-0662	3		DIODE-PWR RECT 100V 6A	04713	MR751
A3A2CR12	1901-0662	3		DIODE-PWR RECT 100V 6A	04713	MR751
A3A2CR13	1901-0496	1	2	DIODE-PWR RECT 100V 12A DO-4	04713	MR1121
A3A2CR14	1901-0496	1		DIODE-PWR RECT 100V 12A DO-4	04713	MR1121
A3A2CR15	1990-0404	8	6	LED-LAMP LUM-INT=300UCD IF=50MA-MAX	28480	5082-4480
A3A2CR16	1884-0018	5	6	THYRISTOR-SCR 2N4186 VRRM=200	04713	2N4186
A3A2CR17	1901-0662	3		DIODE-PWR RECT 100V 6A	04713	MR751
A3A2CR18	1884-0018	5		THYRISTOR-SCR 2N4186 VRRM=200	04713	2N4186
A3A2F1	2110-0001	8	1	FUSE 1A 250V NTD 1.25X.25 UL	75915	312001
A3A2MP1	0380-0617	1	1	SPACER-PRESS-IN .187 IN MAX OD; .458 IN	28480	0380-0617
A3A2MP2	0590-0526	6		THREADED INSERT-NUT 4-40 .065-IN-LG SST	28480	0590-0526
A3A2MP3	1200-0081	4	1	INSULATOR-FLG-BSHG NYLON	28480	1200-0081
A3A2MP4	1251-2313	6	2	CONNECTOR-SGL CONT SKT .04-IN-BSC-SZ RND	28480	1251-2313
A3A2MP5	2740-0003	5	1	NUT-HEX-W/LKWR 10-32-THD .125-IN-THK	00000	ORDER BY DESCRIPTION
A3A2MP6	6040-0239	9		LUBRICANT-GREASE SIL	05820	120
A3A2MP7	5000-9043	6	6	PIN-P.C. BOARD EXTRACTOR	28480	5000-9043
A3A2MP8	5040-6843	2	6	BOARD EXTRACTOR	28480	5040-6843
A3A2MP9	86701-00018	4	1	HEAT SINK	28480	86701-00018
A3A2MP10	86701-00025	3	1	INSULATOR	28480	86701-00025
A3A2R1	0698-0083	8		RESISTOR 1.96K 1% .125W F TC=0+-100	24546	C4-1/8-TO-1961-F
A3A2R2	2100-3123	0	1	RESISTOR-TRMR 500 10% C SIDE-ADJ 17-TRN	02111	43P501
A3A2R3	0757-0346	2		RESISTOR 10 1% .125W F TC=0+-100	24546	C4-1/8-TO-10R0-F
A3A2R4	0698-3444	1	8	RESISTOR 316 1% .125W F TC=0+-100	24546	C4-1/8-TO-316R-F
A3A2R5	0698-3447	4	5	RESISTOR 422 1% .125W F TC=0+-100	24546	C4-1/8-TO-422R-F
A3A2TP1	1251-0600	0		CONNECTOR-SGL CONT PIN 1.14-MM-BSC-SZ SQ	28480	1251-0600
A3A2U1	1826-0126	4	1	IC 7818 V RGLTR TO-3	04713	MC7818CK
A3A2VR1	1902-3263	8	1	DIODE-ZNR 24.9V 2% DO-35 PD=.4W	28480	1902-3263
A3A2VR2	1902-3404	9	2	DIODE-ZNR 82.5V 5% DO-7 PD=.4W TC=+.082%	28480	1902-3404
A3A2XF1	2110-0269	0	6	FUSEHOLDER-CLIP TYPE.25D-FUSE	28480	2110-0269
A3A3	86701-60080	6	1	POSITIVE REGULATOR ASSEMBLY	28480	86701-60080
A3A3C1	0180-2205	3	1	CAPACITOR-FXD .33UF+-10% 35VDC TA	56289	150D334X9035A2
A3A3C2	0180-0116	1		CAPACITOR-FXD 6.8UF+-10% 35VDC TA	56289	150D685X9035B2
A3A3C3	0180-1746	5		CAPACITOR-FXD 15UF+-10% 20VDC TA	56289	150D156X9020B2
A3A3C4	0160-2199	2		CAPACITOR-FXD 30PF +-5% 300VDC MICA	28480	0160-2199
A3A3C5	0180-0228	6	11	CAPACITOR-FXD 22UF+-10% 15VDC TA	56289	150D226X9015B2

See introduction to this section for ordering information
*Indicates factory selected value

Table 6-3. Replaceable Parts

Reference Designation	HP Part Number	C D	Qty	Description	Mfr Code	Mfr Part Number
A3A3C6	0180-0116	1		CAPACITOR-FXD 6.8UF+-10% 35VDC TA	56289	150D685X9035B2
A3A3C7	0180-0228	6		CAPACITOR-FXD 22UF+-10% 15VDC TA	56289	150D226X9015B2
A3A3C8	0160-3460	2	5	CAPACITOR-FXD .05UF +80-20% 100VDC CER	28480	0160-3460
A3A3C9	0160-3460	2		CAPACITOR-FXD .05UF +80-20% 100VDC CER	28480	0160-3460
A3A3C10	0160-2199	2		CAPACITOR-FXD 30PF +-5% 300VDC MICA	28480	0160-2199
A3A3C11	0180-0197	8		CAPACITOR-FXD 2.2UF+-10% 20VDC TA	56289	150D225X9020A2
A3A3C12	0180-0228	6		CAPACITOR-FXD 22UF+-10% 15VDC TA	56289	150D226X9015B2
A3A3C13	0160-0127	2	6	CAPACITOR-FXD 1UF +-20% 25VDC CER	28480	0160-0127
A3A3C14	0180-0197	8		CAPACITOR-FXD 2.2UF+-10% 20VDC TA	56289	150D225X9020A2
A3A3C15	0160-4298	6	2	CAPACITOR-FXD 4700PF +-20% 250VDC CER	56289	C067F251H472MS22-CDH
A3A3CR1	1884-0018	5		THYRISTOR-SCR 2N4186 VRRM=200	04713	2N4186
A3A3CR2	1884-0046	9	1	THYRISTOR-SCR VRRM=50	03508	C230F
A3A3CR3	1990-0487	7	1	LED-LAMP LUM-INT=1MCD IF=20MA-MAX BVR=5V	28480	5082-4584
A3A3CR4	1901-0033	2	21	DIODE-GEN PRP 180V 200MA DO-7	28480	1901-0033
A3A3CR5	1901-0033	2		DIODE-GEN PRP 180V 200MA DO-7	28480	1901-0033
A3A3CR6	1901-0033	2		DIODE-GEN PRP 180V 200MA DO-7	28480	1901-0033
A3A3CR7	1901-0033	2		DIODE-GEN PRP 180V 200MA DO-7	28480	1901-0033
A3A3CR8	1901-0033	2		DIODE-GEN PRP 180V 200MA DO-7	28480	1901-0033
A3A3CR9	1990-0404	8		LED-LAMP LUM-INT=300UCD IF=50MA-MAX	28480	5082-4480
A3A3CR10	1990-0404	8		LED-LAMP LUM-INT=300UCD IF=50MA-MAX	28480	5082-4480
A3A3CR11	1901-0033	2		DIODE-GEN PRP 180V 200MA DO-7	28480	1901-0033
A3A3CR12	1901-0033	2		DIODE-GEN PRP 180V 200MA DO-7	28480	1901-0033
A3A3F1	2110-0056	3	1	FUSE 6A 250V NTD 1.25X.25 UL IEC	75915	312006
A3A3F2	2110-0003	0	1	FUSE 3A 250V NTD 1.25X.25 UL	75915	312003
A3A3MP1	0520-0128	7		SCREW-MACH 2-56 .25-IN-LG PAN-HD-POZI	00000	ORDER BY DESCRIPTION
A3A3MP2	2190-0014	1		WASHER-LK INTL T NO. 2 .089-IN-ID	28480	2190-0014
A3A3MP3	2190-0027	6	1	WASHER-LK INTL T 1/4 IN .256-IN-ID	28480	2190-0027
A3A3MP4	2950-0051	8	1	NUT-HEX-DBL-CHAM 1/4-28-THD .094-IN-THK	00000	ORDER BY DESCRIPTION
A3A3MP5	5000-9043	6		PIN-P.C. BOARD EXTRACTOR	28480	5000-9043
A3A3MP6	5040-6843	2		BOARD EXTRACTOR	28480	5040-6843
A3A3MP7	86701-20036	8	1	MOUNTING BLOCK-DIODE	28480	86701-20036
A3A3Q1	1854-0404	0		TRANSISTOR NPN SI TO-18 PD=360MW	28480	1854-0404
A3A3Q2	1853-0451	5		TRANSISTOR PNP 2N3799 SI TO-18 PD=360MW	01295	2N3799
A3A3Q3	1853-0012	4	3	TRANSISTOR PNP 2N2904A SI TO-39 PD=600MW	01295	2N2904A
A3A3Q4	1854-0404	0		TRANSISTOR NPN SI TO-18 PD=360MW	28480	1854-0404
A3A3Q5	1854-0441	5	2	TRANSISTOR NPN SI PD=5.8W FT=800KHZ	28480	1854-0441
A3A3Q6	1854-0404	0		TRANSISTOR NPN SI TO-18 PD=360MW	28480	1854-0404
A3A3Q7	1854-0404	0		TRANSISTOR NPN SI TO-18 PD=360MW	28480	1854-0404
A3A3Q8	1854-0404	0		TRANSISTOR NPN SI TO-18 PD=360MW	28480	1854-0404
A3A3Q9	1854-0005	7	1	TRANSISTOR NPN 2N708 SI TO-18 PD=360MW	04713	2N708
A3A3Q10	1854-0039	7	1	TRANSISTOR NPN 2N3053B SI TO-39 PD=1W	3L585	2N3053B
A3A3R1	0757-0443	0	3	RESISTOR 11K 1% .125W F TC=0+-100	24546	C4-1/8-T0-1102-F
A3A3R2	0757-0401	0		RESISTOR 100 1% .125W F TC=0+-100	24546	C4-1/8-T0-101-F
A3A3R3	0811-1659	8	1	RESISTOR .27 5% 2W PW TC=0+-800	75042	BWH2-27/100-J
A3A3R4	0757-0418	9	3	RESISTOR 619 1% .125W F TC=0+-100	24546	C4-1/8-T0-619R-F
A3A3R5	0757-0443	0		RESISTOR 11K 1% .125W F TC=0+-100	24546	C4-1/8-T0-1102-F
A3A3R6	0757-0394	0		RESISTOR 51.1 1% .125W F TC=0+-100	24546	C4-1/8-T0-51R1-F
A3A3R7	0698-3150	6		RESISTOR 2.37K 1% .125W F TC=0+-100	24546	C4-1/8-T0-2371-F
A3A3R8	0698-3442	9	2	RESISTOR 237 1% .125W F TC=0+-100	24546	C4-1/8-T0-237R-F
A3A3R9	0698-8465	6	1	RESISTOR 7.15K .5% .125W F TC=0+-50	28480	0698-8465
A3A3R10	0698-6835	0	9	RESISTOR 3.16K .5% .125W F TC=0+-50	24546	NC55-1/8-T2-3161-D
A3A3R11	0757-0280	3		RESISTOR 1K 1% .125W F TC=0+-100	24546	C4-1/8-T0-1001-F
A3A3R12	0757-0278	9	4	RESISTOR 1.78K 1% .125W F TC=0+-100	24546	C4-1/8-T0-1781-F
A3A3R13	0683-0275	9	5	RESISTOR 2.7 5% .25W FC TC=-400/+500	01121	CB27G5
A3A3R14	0698-3444	1		RESISTOR 316 1% .125W F TC=0+-100	24546	C4-1/8-T0-316R-F
A3A3R15	0757-0346	2		RESISTOR 10 1% .125W F TC=0+-100	24546	C4-1/8-T0-10R0-F
A3A3R16	0757-0278	9		RESISTOR 1.78K 1% .125W F TC=0+-100	24546	C4-1/8-T0-1781-F
A3A3R17	0698-3162	0	1	RESISTOR 46.4K 1% .125W F TC=0+-100	24546	C4-1/8-T0-4642-F
A3A3R18	0757-0442	9		RESISTOR 10K 1% .125W F TC=0+-100	24546	C4-1/8-T0-1002-F
A3A3R19	0757-0438	3		RESISTOR 5.11K 1% .125W F TC=0+-100	24546	C4-1/8-T0-5111-F
A3A3R20	0698-0083	8		RESISTOR 1.96K 1% .125W F TC=0+-100	24546	C4-1/8-T0-1961-F
A3A3R21	0757-0317	7		RESISTOR 1.33K 1% .125W F TC=0+-100	24546	C4-1/8-T0-1331-F
A3A3R22	0698-0084	9		RESISTOR 2.15K 1% .125W F TC=0+-100	24546	C4-1/8-T0-2151-F
A3A3R23	0757-0278	9		RESISTOR 1.78K 1% .125W F TC=0+-100	24546	C4-1/8-T0-1781-F
A3A3R24	0698-3629	4	1	RESISTOR 270 5% 2W MO TC=0+-200	28480	0698-3629
A3A3R25	0698-0084	9		RESISTOR 2.15K 1% .125W F TC=0+-100	24546	C4-1/8-T0-2151-F
A3A3R26	0757-0401	0		RESISTOR 100 1% .125W F TC=0+-100	24546	C4-1/8-T0-101-F
A3A3R27	0811-1661	2	3	RESISTOR .39 5% 2W PW TC=0+-800	75042	BWH2-39/100-J
A3A3R28	0811-1661	2		RESISTOR .39 5% 2W PW TC=0+-800	75042	BWH2-39/100-J
A3A3R29	0811-1661	2		RESISTOR .39 5% 2W PW TC=0+-800	75042	BWH2-39/100-J
A3A3R30	0757-0419	0		RESISTOR 681 1% .125W F TC=0+-100	24546	C4-1/8-T0-681R-F
A3A3R31	0757-0420	3		RESISTOR 750 1% .125W F TC=0+-100	24546	C4-1/8-T0-751-F
A3A3R32	0698-3154	0		RESISTOR 4.22K 1% .125W F TC=0+-100	24546	C4-1/8-T0-4221-F
A3A3R33	0757-0280	3		RESISTOR 1K 1% .125W F TC=0+-100	24546	C4-1/8-T0-1001-F
A3A3R34	0698-8466	7	1	RESISTOR 942 .5% .125W F TC=0+-50	28480	0698-8466
A3A3R35	0698-6835	0		RESISTOR 3.16K .5% .125W F TC=0+-50	24546	NC55-1/8-T2-3161-D

See introduction to this section for ordering information
*Indicates factory selected value

Table 6-3. Replaceable Parts

Reference Designation	HP Part Number	C D	Qty	Description	Mfr Code	Mfr Part Number
A3A3R36	0698-6835	0		RESISTOR 3.16K .5% .125W F TC=0+-50	24546	NC55-1/8-T2-3161-D
A3A3R37	0683-0275	9		RESISTOR 2.7 5% .25W FC TC=-400/+500	01121	CB27G5
A3A3R38	0698-3444	1		RESISTOR 316 1% .125W F TC=0+-100	24546	C4-1/8-T0-316R-F
A3A3R39	0757-0401	0		RESISTOR 100 1% .125W F TC=0+-100	24546	C4-1/8-T0-101-F
A3A3R40	0757-0346	2		RESISTOR 10 1% .125W F TC=0+-100	24546	C4-1/8-T0-10R0-F
A3A3R41	0698-3150	6		RESISTOR 2.37K 1% .125W F TC=0+-100	24546	C4-1/8-T0-2371-F
A3A3R42	0757-0418	9		RESISTOR 619 1% .125W F TC=0+-100	24546	C4-1/8-T0-619R-F
A3A3R43	0698-3156	2		RESISTOR 14.7K 1% .125W F TC=0+-100	24546	C4-1/8-T0-1472-F
A3A3R44	0757-0459	8	1	RESISTOR 56.2K 1% .125W F TC=0+-100	24546	C4-1/8-T0-5622-F
A3A3R45	0698-3150	6		RESISTOR 2.37K 1% .125W F TC=0+-100	24546	C4-1/8-T0-2371-F
A3A3R46	0698-3150	6		RESISTOR 2.37K 1% .125W F TC=0+-100	24546	C4-1/8-T0-2371-F
A3A3R47	0757-0290	5	4	RESISTOR 6.19K 1% .125W F TC=0+-100	19701	MF4C1/8-T0-6191-F
A3A3R48	0698-3150	6		RESISTOR 2.37K 1% .125W F TC=0+-100	24546	C4-1/8-T0-2371-F
A3A3R49	0698-8464	5	2	RESISTOR 12.6K .5% .125W F TC=0+-50	28480	0698-8464
A3A3R50	2100-3095	5	1	RESISTOR-TRMR 200 10% C SIDE-ADJ 17-TRN	02111	43P201
A3A3R51	0757-0440	7		RESISTOR 7.5K 1% .125W F TC=0+-100	24546	C4-1/8-T0-7501-F
A3A3R52	0698-0084	9		RESISTOR 2.15K 1% .125W F TC=0+-100	24546	C4-1/8-T0-2151-F
A3A3R53	0698-4405	6	1	RESISTOR 107 1% .125W F TC=0+-100	24546	C4-1/8-T0-107R-F
A3A3R54	0757-0280	3		RESISTOR 1K 1% .125W F TC=0+-100	24546	C4-1/8-T0-1001-F
A3A3R55	0757-0401	0		RESISTOR 100 1% .125W F TC=0+-100	24546	C4-1/8-T0-101-F
A3A3R56	0698-3150	6		RESISTOR 2.37K 1% .125W F TC=0+-100	24546	C4-1/8-T0-2371-F
A3A3R57	0757-0438	3		RESISTOR 5.11K 1% .125W F TC=0+-100	24546	C4-1/8-T0-5111-F
A3A3R58	0698-3634	1	1	RESISTOR 470 5% 2W MO TC=0+-200	28480	0698-3634
A3A3R59	0757-0447	4	4	RESISTOR 16.2K 1% .125W F TC=0+-100	24546	C4-1/8-T0-1622-F
A3A3R60	0757-0416	7		RESISTOR 511 1% .125W F TC=0+-100	24546	C4-1/8-T0-511R-F
A3A3RT1	0837-0126	6	1	THERMISTOR DISC 1K-OHM TC=-4.4%/C-DEG	28480	0837-0126
A3A3TP1	1251-0600	0		CONNECTOR-SGL CONT PIN 1.14-MM-BSC-SZ SQ	28480	1251-0600
A3A3TP2	1251-0600	0		CONNECTOR-SGL CONT PIN 1.14-MM-BSC-SZ SQ	28480	1251-0600
A3A3TP3	1251-0600	0		CONNECTOR-SGL CONT PIN 1.14-MM-BSC-SZ SQ	28480	1251-0600
A3A3TP4	1251-0600	0		CONNECTOR-SGL CONT PIN 1.14-MM-BSC-SZ SQ	28480	1251-0600
A3A3TP5	1251-0600	0		CONNECTOR-SGL CONT PIN 1.14-MM-BSC-SZ SQ	28480	1251-0600
A3A3TP6	1251-0600	0		CONNECTOR-SGL CONT PIN 1.14-MM-BSC-SZ SQ	28480	1251-0600
A3A3U1	1826-0161	7	1	IC OP AMP GP QUAD 14-DIP-P PKG	04713	MLM324P
A3A3U2	1820-0223	0		IC OP AMP GP TO-99 PKG	3L585	CA301AT
A3A3U3	1820-0223	0		IC OP AMP GP TO-99 PKG	3L585	CA301AT
A3A3VR1	1902-3171	7	2	DIODE-ZNR 11V 5% DO-35 PD=.4W TC=+.062%	28480	1902-3171
A3A3VR2	1902-0686	3	2	DIODE-ZNR 6.2V 2% DO-7 PD=.4W TC=+.002%	04713	1N825
A3A3VR3	1902-3252	5	1	DIODE-ZNR 22.6V 2% DO-35 PD=.4W	28480	1902-3252
A3A3VR4	1902-0049	2	2	DIODE-ZNR 6.19V 5% DO-35 PD=.4W	28480	1902-0049
A3A3VR5	1902-0686	3		DIODE-ZNR 6.2V 2% DO-7 PD=.4W TC=+.002%	04713	1N825
A3A3VR6	1902-3082	9		DIODE-ZNR 4.64V 5% DO-35 PD=.4W	28480	1902-3082
A3A3XF1	2110-0269	0		FUSEHOLDER-CLIP TYPE.25D-FUSE	28480	2110-0269
A3A3XF2	2110-0269	0		FUSEHOLDER-CLIP TYPE.25D-FUSE	28480	2110-0269
A3A4	86701-60078	2	1	NEGATIVE REGULATOR ASSEMBLY	28480	86701-60078
A3A4C1	0160-2199	2		CAPACITOR-FXD 30PF +-5% 300VDC MICA	28480	0160-2199
A3A4C2	0180-0228	6		CAPACITOR-FXD 22UF+-10% 15VDC TA	56289	150D226X9015B2
A3A4C3	0180-1746	5		CAPACITOR-FXD 15UF+-10% 20VDC TA	56289	150D156X9020B2
A3A4C4	0160-2199	2		CAPACITOR-FXD 30PF +-5% 300VDC MICA	28480	0160-2199
A3A4C5	0180-0228	6		CAPACITOR-FXD 22UF+-10% 15VDC TA	56289	150D226X9015B2
A3A4C6	0160-2199	2		CAPACITOR-FXD 30PF +-5% 300VDC MICA	28480	0160-2199
A3A4C7	0180-0228	6		CAPACITOR-FXD 22UF+-10% 15VDC TA	56289	150D226X9015B2
A3A4C8	0180-1731	8		CAPACITOR-FXD 4.7UF+-10% 50VDC TA	56289	150D475X9050B2
A3A4C9	0160-3460	2		CAPACITOR-FXD .05UF +80-20% 100VDC CER	28480	0160-3460
A3A4C10	0180-1746	5		CAPACITOR-FXD 15UF+-10% 20VDC TA	56289	150D156X9020B2
A3A4C11	0160-0127	2		CAPACITOR-FXD 1UF +-20% 25VDC CER	28480	0160-0127
A3A4C12	0160-0575	4	2	CAPACITOR-FXD .047UF +-20% 50VDC CER	28480	0160-0575
A3A4C13	0160-0127	2		CAPACITOR-FXD 1UF +-20% 25VDC CER	28480	0160-0127
A3A4C14	0160-0127	2		CAPACITOR-FXD 1UF +-20% 25VDC CER	28480	0160-0127
A3A4C15	0160-3460	2		CAPACITOR-FXD .05UF +80-20% 100VDC CER	28480	0160-3460
A3A4C16	0180-0100	3	1	CAPACITOR-FXD 4.7UF+-10% 35VDC TA	56289	150D475X9035B2
A3A4CR1	1901-0033	2		DIODE-GEN PRP 180V 200MA DO-7	28480	1901-0033
A3A4CR2	1901-0033	2		DIODE-GEN PRP 180V 200MA DO-7	28480	1901-0033
A3A4CR3	1901-0033	2		DIODE-GEN PRP 180V 200MA DO-7	28480	1901-0033
A3A4CR4	1901-0033	2		DIODE-GEN PRP 180V 200MA DO-7	28480	1901-0033
A3A4CR5	1901-0033	2		DIODE-GEN PRP 180V 200MA DO-7	28480	1901-0033
A3A4CR6	1901-0033	2		DIODE-GEN PRP 180V 200MA DO-7	28480	1901-0033
A3A4CR7	1901-0033	2		DIODE-GEN PRP 180V 200MA DO-7	28480	1901-0033
A3A4CR8	1901-0662	3		DIODE-PWR RECT 100V 6A	04713	MR751
A3A4CR9	1901-0662	3		DIODE-PWR RECT 100V 6A	04713	MR751
A3A4CR10	1990-0404	8		LED-LAMP LUM-INT=300UCD IF=50MA-MAX	28480	5082-4480

See introduction to this section for ordering information
*Indicates factory selected value

Table 6-3. Replaceable Parts

Reference Designation	HP Part Number	C D	Qty	Description	Mfr Code	Mfr Part Number
A3A4CR11	1990-0404	8		LED-LAMP LUM-INT=300UCD IF=50MA-MAX	28480	5082-4480
A3A4CR12	1901-0662	3		DIODE-PWR RECT 100V 6A	04713	MR751
A3A4CR13	1990-0404	8		LED-LAMP LUM-INT=300UCD IF=50MA-MAX	28480	5082-4480
A3A4CR14	1901-0033	2		DIODE-GEN PRP 180V 200MA DO-7	28480	1901-0033
A3A4CR15	1901-0159	3	2	DIODE-PWR RECT 400V 750MA DO-41	28480	1901-0159
A3A4CR16-A3A4CR24				NOT ASSIGNED		
A3A4CR25	1884-0018	5		THYRISTOR-SCR 2N4186 VRRM=200	04713	2N4186
A3A4CR26	1884-0018	5		THYRISTOR-SCR 2N4186 VRRM=200	04713	2N4186
A3A4CR27	1884-0018	5		THYRISTOR-SCR 2N4186 VRRM=200	04713	2N4186
A3A4F1	2110-0083	6	1	FUSE 2.5A 250V NTD 1.25X.25 UL	28480	2110-0083
A3A4F2	2110-0043	8	1	FUSE 1.5A 250V NTD 1.25X.25 UL	28480	2110-0043
A3A4F3	2110-0010	9	1	FUSE 5A 250V NTD 1.25X.25 UL	75915	312005
A3A4K1	0490-0916	6	1	RELAY-REED 1A 500MA 100VDC 5VDC-COIL	28480	0490-0916
A3A4MP1	5000-9043	6		PIN-P.C. BOARD EXTRACTOR	28480	5000-9043
A3A4MP2	5040-6843	2		BOARD EXTRACTOR	28480	5040-6843
A3A4Q1	1854-0404	0		TRANSISTOR NPN SI TO-18 PD=360MW	28480	1854-0404
A3A4Q2	1854-0441	5		TRANSISTOR NPN SI PD=5.8W FT=800KHZ	28480	1854-0441
A3A4Q3	1853-0001	1	1	TRANSISTOR PNP SI TO-39 PD=600MW	28480	1853-0001
A3A4Q4	1853-0007	7	6	TRANSISTOR PNP 2N3251 SI TO-18 PD=360MW	04713	2N3251
A3A4Q5	1854-0271	9	1	TRANSISTOR NPN SI TO-39 PD=1W FT=150MHZ	28480	1854-0271
A3A4Q6	1854-0404	0		TRANSISTOR NPN SI TO-18 PD=360MW	28480	1854-0404
A3A4Q7	1854-0404	0		TRANSISTOR NPN SI TO-18 PD=360MW	28480	1854-0404
A3A4R1	0812-0020	7	2	RESISTOR .39 5% 3W PW TC=0+-90	91637	CW2B1-3-T2-39/100-J
A3A4R2	0757-0421	4		RESISTOR 825 1% .125W F TC=0+-100	24546	C4-1/8-T0-825R-F
A3A4R3	0757-0438	3		RESISTOR 5.11K 1% .125W F TC=0+-100	24546	C4-1/8-T0-5111-F
A3A4R4	0757-0280	3		RESISTOR 1K 1% .125W F TC=0+-100	24546	C4-1/8-T0-1001-F
A3A4R5	0698-6835	0		RESISTOR 3.16K .5% .125W F TC=0+-50	24546	NC55-1/8-T2-3161-D
A3A4R6	0698-6835	0		RESISTOR 3.16K .5% .125W F TC=0+-50	24546	NC55-1/8-T2-3161-D
A3A4R7	0698-6835	0		RESISTOR 3.16K .5% .125W F TC=0+-50	24546	NC55-1/8-T2-3161-D
A3A4R8	0683-0275	9		RESISTOR 2.7 5% .25W FC TC=-400/+500	01121	CB27G5
A3A4R9	0698-3444	1		RESISTOR 316 1% .125W F TC=0+-100	24546	C4-1/8-T0-316R-F
A3A4R10	0757-0346	2		RESISTOR 10 1% .125W F TC=0+-100	24546	C4-1/8-T0-10R0-F
A3A4R11	0757-0280	3		RESISTOR 1K 1% .125W F TC=0+-100	24546	C4-1/8-T0-1001-F
A3A4R12	0757-0428	1		RESISTOR 1.62K 1% .125W F TC=0+-100	24546	C4-1/8-T0-1621-F
A3A4R13	0698-3447	4		RESISTOR 422 1% .125W F TC=0+-100	24546	C4-1/8-T0-422R-F
A3A4R14	0698-3444	1		RESISTOR 316 1% .125W F TC=0+-100	24546	C4-1/8-T0-316R-F
A3A4R15	0757-0346	2		RESISTOR 10 1% .125W F TC=0+-100	24546	C4-1/8-T0-10R0-F
A3A4R16	0698-3444	1		RESISTOR 316 1% .125W F TC=0+-100	24546	C4-1/8-T0-316R-F
A3A4R17	0811-1665	6	1	RESISTOR .82 5% 2W PW TC=0+-800	75042	BWH2-82/100-J
A3A4R18	0757-0280	3		RESISTOR 1K 1% .125W F TC=0+-100	24546	C4-1/8-T0-1001-F
A3A4R19	0698-3449	6		RESISTOR 28.7K 1% .125W F TC=0+-100	24546	C4-1/8-T0-2872-F
A3A4R20	0757-0280	3		RESISTOR 1K 1% .125W F TC=0+-100	24546	C4-1/8-T0-1001-F
A3A4R21	0757-0442	9		RESISTOR 10K 1% .125W F TC=0+-100	24546	C4-1/8-T0-1002-F
A3A4R22	0757-0442	9		RESISTOR 10K 1% .125W F TC=0+-100	24546	C4-1/8-T0-1002-F
A3A4R23	0812-0020	7		RESISTOR .39 5% 3W PW TC=0+-90	91637	CW2B1-3-T2-39/100-J
A3A4R24	0698-8464	5		RESISTOR 12.6K .5% .125W F TC=0+-50	28480	0698-8464
A3A4R25	0698-6835	0		RESISTOR 3.16K .5% .125W F TC=0+-50	24546	NC55-1/8-T2-3161-D
A3A4R26	0698-6835	0		RESISTOR 3.16K .5% .125W F TC=0+-50	24546	NC55-1/8-T2-3161-D
A3A4R27	0683-0275	9		RESISTOR 2.7 5% .25W FC TC=-400/+500	01121	CB27G5
A3A4R28	0698-3444	1		RESISTOR 316 1% .125W F TC=0+-100	24546	C4-1/8-T0-316R-F
A3A4R29	0757-0346	2		RESISTOR 10 1% .125W F TC=0+-100	24546	C4-1/8-T0-10R0-F
A3A4R30	0698-3150	6		RESISTOR 2.37K 1% .125W F TC=0+-100	24546	C4-1/8-T0-2371-F
A3A4R31	0698-3150	6		RESISTOR 2.37K 1% .125W F TC=0+-100	24546	C4-1/8-T0-2371-F
A3A4R32	0812-0066	1	3	RESISTOR .33 5% 2W PW TC=0+-800	75042	BWH2-33/100-J
A3A4R33	0812-0066	1		RESISTOR .33 5% 2W PW TC=0+-800	75042	BWH2-33/100-J
A3A4R34	0812-0066	1		RESISTOR .33 5% 2W PW TC=0+-800	75042	BWH2-33/100-J
A3A4R35	0757-0280	3		RESISTOR 1K 1% .125W F TC=0+-100	24546	C4-1/8-T0-1001-F
A3A4R36	0757-0441	8		RESISTOR 8.25K 1% .125W F TC=0+-100	24546	C4-1/8-T0-8251-F
A3A4R37	0698-6835	0		RESISTOR 3.16K .5% .125W F TC=0+-50	24546	NC55-1/8-T2-3161-D
A3A4R38	0698-7050	3	1	RESISTOR 4.48K .5% .125W F TC=0+-50	28480	0698-7050
A3A4R39	0698-6853	2	1	RESISTOR 7.68K .5% .125W F TC=0+-50	24546	NC55-1/8-T2-7681-D
A3A4R40	0683-0275	9		RESISTOR 2.7 5% .25W FC TC=-400/+500	01121	CB27G5
A3A4R41	0757-0441	8		RESISTOR 8.25K 1% .125W F TC=0+-100	24546	C4-1/8-T0-8251-F
A3A4R42	0698-3160	8	1	RESISTOR 31.6K 1% .125W F TC=0+-100	24546	C4-1/8-T0-3162-F
A3A4R43	0757-0401	0		RESISTOR 100 1% .125W F TC=0+-100	24546	C4-1/8-T0-101-F
A3A4R44	0757-0401	0		RESISTOR 100 1% .125W F TC=0+-100	24546	C4-1/8-T0-101-F
A3A4R45	0757-0401	0		RESISTOR 100 1% .125W F TC=0+-100	24546	C4-1/8-T0-101-F
A3A4R46	0757-0280	3		RESISTOR 1K 1% .125W F TC=0+-100	24546	C4-1/8-T0-1001-F
A3A4R47	0757-0442	9		RESISTOR 10K 1% .125W F TC=0+-100	24546	C4-1/8-T0-1002-F
A3A4R48	0757-0401	0		RESISTOR 100 1% .125W F TC=0+-100	24546	C4-1/8-T0-101-F
A3A4TP1	1251-0600	0		CONNECTOR-SGL CONT PIN 1.14-MM-BSC-SZ SQ	28480	1251-0600
A3A4TP2	1251-0600	0		CONNECTOR-SGL CONT PIN 1.14-MM-BSC-SZ SQ	28480	1251-0600
A3A4TP3	1251-0600	0		CONNECTOR-SGL CONT PIN 1.14-MM-BSC-SZ SQ	28480	1251-0600
A3A4TP4	1251-0600	0		CONNECTOR-SGL CONT PIN 1.14-MM-BSC-SZ SQ	28480	1251-0600
A3A4TP5	1251-0600	0		CONNECTOR-SGL CONT PIN 1.14-MM-BSC-SZ SQ	28480	1251-0600

See introduction to this section for ordering information
*Indicates factory selected value

Table 6-3. Replaceable Parts

Reference Designation	HP Part Number	C D	Qty	Description	Mfr Code	Mfr Part Number
A3A4U1	1820-0223	0		IC OP AMP GP TO-99 PKG	3L585	CA301AT
A3A4U2	1820-0223	0		IC OP AMP GP TO-99 PKG	3L585	CA301AT
A3A4U3	1820-0223	0		IC OP AMP GP TO-99 PKG	3L585	CA301AT
A3A4VR1	1902-0025	4	2	DIODE-ZNR 10V 5% DO-35 PD=.4W TC=+.06%	28480	1902-0025
A3A4VR2	1902-3171	7		DIODE-ZNR 11V 5% DO-35 PD=.4W TC=+.062%	28480	1902-3171
A3A4VR3	1902-3330	0	1	DIODE-ZNR 44.2V 2% DO-35 PD=.4W	28480	1902-3330
A3A4VR4	1902-0049	2		DIODE-ZNR 6.19V 5% DO-35 PD=.4W	28480	1902-0049
A3A4XF1	2110-0269	0		FUSEHOLDER-CLIP TYPE.25D-FUSE	28480	2110-0269
A3A4XF2	2110-0269	0		FUSEHOLDER-CLIP TYPE.25D-FUSE	28480	2110-0269
A3A4XF3	2110-0269	0		FUSEHOLDER-CLIP TYPE.25D-FUSE	28480	2110-0269
A3A5	86701-60015	7	1	DAC ASSY (DIGITAL-TO-ANALOG CONVERTER)	28480	86701-60015
A3A5C1	0160-2055	9		CAPACITOR-FXD .01UF +80-20% 100VDC CER	28480	0160-2055
A3A5C2	0180-0228	6		CAPACITOR-FXD 22UF+-10% 15VDC TA	56289	150D226X9015B2
A3A5C3	0160-2055	9		CAPACITOR-FXD .01UF +80-20% 100VDC CER	28480	0160-2055
A3A5C4	0180-0229	7		CAPACITOR-FXD 33UF+-10% 10VDC TA	56289	150D336X9010B2
A3A5C5	0160-2055	9		CAPACITOR-FXD .01UF +80-20% 100VDC CER	28480	0160-2055
A3A5C6	0180-0116	1		CAPACITOR-FXD 6.8UF+-10% 35VDC TA	56289	150D685X9035B2
A3A5C7	0180-1731	8		CAPACITOR-FXD 4.7UF+-10% 50VDC TA	56289	150D475X9050B2
A3A5C8	0160-2055	9		CAPACITOR-FXD .01UF +80-20% 100VDC CER	28480	0160-2055
A3A5C9	0180-1731	8		CAPACITOR-FXD 4.7UF+-10% 50VDC TA	56289	150D475X9050B2
A3A5C10	0160-2055	9		CAPACITOR-FXD .01UF +80-20% 100VDC CER	28480	0160-2055
A3A5C11	0180-2141	6	1	CAPACITOR-FXD 3.3UF+-10% 50VDC TA	56289	150D335X9050B2
A3A5C12	0160-0160	3	1	CAPACITOR-FXD 8200PF +-10% 200VDC POLYE	28480	0160-0160
A3A5L1	9100-1641	0		INDUCTOR RF-CH-MLD 240UH 5% .166DX.385LG	28480	9100-1641
A3A5L2	9100-1641	0		INDUCTOR RF-CH-MLD 240UH 5% .166DX.385LG	28480	9100-1641
A3A5L3	9100-1641	0		INDUCTOR RF-CH-MLD 240UH 5% .166DX.385LG	28480	9100-1641
A3A5MP1	5000-9043	6		PIN-P.C. BOARD EXTRACTOR	28480	5000-9043
A3A5MP2	5040-6843	2		EXTRACTOR- P.C. BOARD	28480	5040-6843
A3A5Q1	1853-0007	7		TRANSISTOR PNP 2N3251 SI TO-18 PD=360MW	04713	2N3251
A3A5Q2	1853-0451	5		TRANSISTOR PNP 2N3799 SI TO-18 PD=360MW	01295	2N3799
A3A5Q3	1853-0451	5		TRANSISTOR PNP 2N3799 SI TO-18 PD=360MW	01295	2N3799
A3A5Q4	1854-0404	0		TRANSISTOR NPN SI TO-18 PD=360MW	28480	1854-0404
A3A5Q5	1854-0475	5	3	TRANSISTOR-DUAL NPN PD=750MW	28480	1854-0475
A3A5Q6	1853-0451	5		TRANSISTOR PNP 2N3799 SI TO-18 PD=360MW	01295	2N3799
A3A5Q7	1854-0474	4	1	TRANSISTOR NPN SI PD=310MW FT=100MHZ	04713	2N5551
A3A5Q8	1853-0007	7		TRANSISTOR PNP 2N3251 SI TO-18 PD=360MW	04713	2N3251
A3A5Q9	1853-0451	5		TRANSISTOR PNP 2N3799 SI TO-18 PD=360MW	01295	2N3799
A3A5Q10	1853-0451	5		TRANSISTOR PNP 2N3799 SI TO-18 PD=360MW	01295	2N3799
A3A5Q11	1853-0007	7		TRANSISTOR PNP 2N3251 SI TO-18 PD=360MW	04713	2N3251
A3A5Q12	1853-0451	5		TRANSISTOR PNP 2N3799 SI TO-18 PD=360MW	01295	2N3799
A3A5R1	0811-3404	5	1	RESISTOR 3.55K .1% .05W PWW TC=0+-5	28480	0811-3404
A3A5R2	0811-3358	8	1	RESISTOR 7.2K .1% .05W PWW TC=0+-5	28480	0811-3358
A3A5R3	2100-1654	8	2	RESISTOR-TRMR 100 5% WW SIDE-ADJ 22-TRN	32997	3057P-1-101
A3A5R4	2100-1448	8	1	RESISTOR-TRMR 200 5% WW SIDE-ADJ 22-TRN	32997	3057Y-1-201
A3A5R5	0698-3447	4		RESISTOR 422 1% .125W F TC=0+-100	24546	C4-1/8-T0-422R-F
A3A5R6	0698-0083	8		RESISTOR 1.96K 1% .125W F TC=0+-100	24546	C4-1/8-T0-1961-F
A3A5R7	0698-3156	2		RESISTOR 14.7K 1% .125W F TC=0+-100	24546	C4-1/8-T0-1472-F
A3A5R8	0757-0290	5		RESISTOR 6.19K 1% .125W F TC=0+-100	19701	MF4C1/8-T0-6191-F
A3A5R9	0757-0401	0		RESISTOR 100 1% .125W F TC=0+-100	24546	C4-1/8-T0-101-F
A3A5R10	0757-0438	3		RESISTOR 5.11K 1% .125W F TC=0+-100	24546	C4-1/8-T0-5111-F
A3A5R11	0811-3357	7	2	RESISTOR 6.25K .1% .05W PWW TC=0+-5	28480	0811-3357
A3A5R14	0811-3359	9	5	RESISTOR 12.5K .1% .05W PWW TC=0+-5	28480	0811-3359
A3A5R15	0811-3357	7		RESISTOR 6.25K .1% .05W PWW TC=0+-5	28480	0811-3357
A3A5R16	0699-0271	8	1	RESISTOR 715 .1% .125W F TC=0+-25	28480	0699-0271
A3A5R17	0811-3359	9		RESISTOR 12.5K .1% .05W PWW TC=0+-5	28480	0811-3359
A3A5R18	2100-1654	8		RESISTOR-TRMR 100 5% WW SIDE-ADJ 22-TRN	32997	3057P-1-101
A3A5R19	0811-3359	9		RESISTOR 12.5K .1% .05W PWW TC=0+-5	28480	0811-3359
A3A5R20	2100-1656	0	4	RESISTOR-TRMR 500 5% WW SIDE-ADJ 22-TRN	32997	3057P-1-501
A3A5R21	0811-3360	2	1	RESISTOR 25K .1% .05W PWW TC=0+-5	28480	0811-3360
A3A5R22	2100-1656	0		RESISTOR-TRMR 500 5% WW SIDE-ADJ 22-TRN	32997	3057P-1-501
A3A5R23	0811-3361	3	1	RESISTOR 50K .1% .05W PWW TC=0+-5	28480	0811-3361
A3A5R24	2100-1658	2	1	RESISTOR-TRMR 2K 5% WW SIDE-ADJ 22-TRN	32997	3057P-1-202
A3A5R25	0811-2919	5	1	RESISTOR 100K .1% .125W PWW TC=0+-5	54294	SP70-1/16-C-1003-B
A3A5R26	0811-2037	8	1	RESISTOR 2.4K 1% .25W PWW TC=0+-10	20940	143-D-2401-F
A3A5R27	0811-3235	0	1	RESISTOR 7.5K 1% .05W PWW TC=0+-10	20940	140-1/20-7501-F
A3A5R28	0698-6358	2	1	RESISTOR 100K .1% .125W F TC=0+-25	28480	0698-6358
A3A5R29	2100-1656	0		RESISTOR-TRMR 500 5% WW SIDE-ADJ 22-TRN	32997	3057P-1-501
A3A5R30	0811-1185	5	1	RESISTOR 10K .01% .05W PWW TC=0+-10	20940	140-1/20-1002-T
A3A5R31	0811-3359	9		RESISTOR 12.5K .1% .05W PWW TC=0+-5	28480	0811-3359
A3A5R32	0811-3138	2	1	RESISTOR 25K .1% .125W PWW TC=0+-10	20940	114-1/16-2502-B
A3A5R33	0811-0647	2	1	RESISTOR 50K .1% .125W PWW TC=0+-10	28480	0811-0647
A3A5R34	0698-8319	9	1	RESISTOR 10K 1% .1W F TC=0+-10	19701	5023Z1/8-T13-1002-F
A3A5R35	0811-3362	4	1	RESISTOR 825 .1% .05W PWW TC=0+-10	28480	0811-3362
A3A5R36	0698-3193	7	1	RESISTOR 10K .25% .125W F TC=0+-50	28480	0698-3193
A3A5R37	0811-3359	9		RESISTOR 12.5K .1% .05W PWW TC=0+-5	28480	0811-3359

See introduction to this section for ordering information
*Indicates factory selected value

Table 6-3. Replaceable Parts

Reference Designation	HP Part Number	C D	Qty	Description	Mfr Code	Mfr Part Number
A3A5R38	0698-3235	8	1	RESISTOR 25K .25% .125W F TC=0+-50	03888	PME55-1/8-T2-2502-C
A3A5R39	0698-3220	1	1	RESISTOR 50K .25% .125W F TC=0+-50	28480	0698-3220
A3A5R40	0698-3190	4	1	RESISTOR 100K .25% .125W F TC=0+-50	28480	0698-3190
A3A5R41	0698-3237	0	1	RESISTOR 5K .25% .125W F TC=0+-50	28480	0698-3237
A3A5R42	2100-1656	0		RESISTOR-TRMR 500 5% WW SIDE-ADJ 22-TRN	32997	3057P-1-501
A3A5R43	0811-2895	6	1	RESISTOR 422 .1% .2W PWW TC=0+-10	14140	1350-1/16-L3-422R-B
A3A5R44	0698-3153	9	3	RESISTOR 3.83K 1% .125W F TC=0+-100	24546	C4-1/8-T0-3831-F
A3A5R45	0698-0083	8		RESISTOR 1.96K 1% .125W F TC=0+-100	24546	C4-1/8-T0-1961-F
A3A5R46	0757-0458	7	9	RESISTOR 51.1K 1% .125W F TC=0+-100	24546	C4-1/8-T0-5112-F
A3A5R47	0757-0438	3		RESISTOR 5.11K 1% .125W F TC=0+-100	24546	C4-1/8-T0-5111-F
A3A5R48	0757-0438	3		RESISTOR 5.11K 1% .125W F TC=0+-100	24546	C4-1/8-T0-5111-F
A3A5R49	0757-0438	3		RESISTOR 5.11K 1% .125W F TC=0+-100	24546	C4-1/8-T0-5111-F
A3A5R50	0757-0458	7		RESISTOR 51.1K 1% .125W F TC=0+-100	24546	C4-1/8-T0-5112-F
A3A5R51	0811-3356	6	1	RESISTOR 5.9K .1% .125W PWW TC=0+-5	28480	0811-3356
A3A5R52	0698-6360	6	1	RESISTOR 10K .1% .125W F TC=0+-25	28480	0698-6360
A3A5R53	0757-0428	1		RESISTOR 1.62K 1% .125W F TC=0+-100	24546	C4-1/8-T0-1621-F
A3A5R54	0757-0346	2		RESISTOR 10 1% .125W F TC=0+-100	24546	C4-1/8-T0-10R0-F
A3A5R55	0811-3325	9	1	RESISTOR 312 .1% .125W PWW TC=0+-10	28480	0811-3325
A3A5R56	0757-0394	0		RESISTOR 51.1 1% .125W F TC=0+-100	24546	C4-1/8-T0-51R1-F
A3A5R57	0757-0421	4		RESISTOR 825 1% .125W F TC=0+-100	24546	C4-1/8-T0-825R-F
A3A5R58	0757-0290	5		RESISTOR 6.19K 1% .125W F TC=0+-100	19701	MF4C1/8-T0-6191-F
A3A5R59	0698-3456	5	1	RESISTOR 287K 1% .125W F TC=0+-100	24546	C4-1/8-T0-2873-F
A3A5R60	0698-3454	3	1	RESISTOR 215K 1% .125W F TC=0+-100	24546	C4-1/8-T0-2153-F
A3A5R61	0757-1094	9		RESISTOR 1.47K 1% .125W F TC=0+-100	24546	C4-1/8-T0-1471-F
A3A5TP1	1251-0600	0		CONNECTOR-SGL CONT PIN 1.14-MM-BSC-SZ SQ	28480	1251-0600
A3A5TP2	1251-0600	0		CONNECTOR-SGL CONT PIN 1.14-MM-BSC-SZ SQ	28480	1251-0600
A3A5TP3	1251-0600	0		CONNECTOR-SGL CONT PIN 1.14-MM-BSC-SZ SQ	28480	1251-0600
A3A5TP4	1251-0600	0		CONNECTOR-SGL CONT PIN 1.14-MM-BSC-SZ SQ	28480	1251-0600
A3A5TP5	1251-0600	0		CONNECTOR-SGL CONT PIN 1.14-MM-BSC-SZ SQ	28480	1251-0600
A3A5U1	1826-0092	3		IC OP AMP GP DUAL TO-99 PKG	28480	1826-0092
A3A5U2	1826-0261	8	4	IC OP AMP LOW-NOISE TO-99 PKG	28480	1826-0261
A3A5U3	1826-0261	8		IC OP AMP LOW-NOISE TO-99 PKG	28480	1826-0261
A3A5U4	1826-0261	8		IC OP AMP LOW-NOISE TO-99 PKG	28480	1826-0261
A3A5U5	1901-1011	8	3	DIODE-ARRAY VF DIFF=5MV	28480	1901-1011
A3A5U6	1901-1011	8		DIODE-ARRAY VF DIFF=5MV	28480	1901-1011
A3A5U7	1901-1011	8		DIODE-ARRAY VF DIFF=5MV	28480	1901-1011
A3A5U8	1820-0668	7	3	IC BFR TTL NON-INV HEX 1-INP	01295	SN7407N
A3A5U9	1820-0668	7		IC BFR TTL NON-INV HEX 1-INP	01295	SN7407N
A3A5U10	1820-0668	7		IC BFR TTL NON-INV HEX 1-INP	01295	SN7407N
A3A5VR1	1902-0692	1	1	DIODE-ZNR 6.3V 1% DO-7 PD=.4W TC=+.001%	28480	1902-0692
A3A5VR2	1902-0244	9	1	DIODE-ZNR 30V 5% PD=1W IR=5UA	28480	1902-0244
A3A6	86701-60016	8	1	YTO DRIVER ASSEMBLY	28480	86701-60016
A3A6C1	0160-3451	1	7	CAPACITOR-FXD .01UF +80-20% 100VDC CER	28480	0160-3451
A3A6C2	0180-1731	8		CAPACITOR-FXD 4.7UF+-10% 50VDC TA	56289	150D475X9050B2
A3A6C3	0180-0116	1		CAPACITOR-FXD 6.8UF+-10% 35VDC TA	56289	150D685X9035B2
A3A6C4	0160-0574	3	6	CAPACITOR-FXD .022UF +-20% 100VDC CER	28480	0160-0574
A3A6C5	0180-0116	1		CAPACITOR-FXD 6.8UF+-10% 35VDC TA	56289	150D685X9035B2
A3A6C6	0160-3451	1		CAPACITOR-FXD .01UF +80-20% 100VDC CER	28480	0160-3451
A3A6C7	0180-2139	2	1	CAPACITOR-FXD 10UF+-20% 60VDC TA	06001	69F177G7
A3A6C8	0160-3451	1		CAPACITOR-FXD .01UF +80-20% 100VDC CER	28480	0160-3451
A3A6C9	0160-3452	2	1	CAPACITOR-FXD .02UF +-20% 100VDC CER	28480	0160-3452
A3A6C10	0180-0229	7		CAPACITOR-FXD 33UF+-10% 10VDC TA	56289	150D336X9010B2
A3A6C11	0160-3451	1		CAPACITOR-FXD .01UF +80-20% 100VDC CER	28480	0160-3451
A3A6C12	0160-3451	1		CAPACITOR-FXD .01UF +80-20% 100VDC CER	28480	0160-3451
A3A6C13	0180-0197	8		CAPACITOR-FXD 2.2UF+-10% 20VDC TA	56289	150D225X9020A2
A3A6C14	0180-0228	6		CAPACITOR-FXD 22UF+-10% 15VDC TA	56289	150D226X9015B2
A3A6C15	0180-1746	5		CAPACITOR-FXD 15UF+-10% 20VDC TA	56289	150D156X9020B2
A3A6C16	0160-3451	1		CAPACITOR-FXD .01UF +80-20% 100VDC CER	28480	0160-3451
A3A6C17	0160-3460	2		CAPACITOR-FXD .05UF +80-20% 100VDC CER	28480	0160-3460
A3A6C18	0160-3451	1		CAPACITOR-FXD .01UF +80-20% 100VDC CER	28480	0160-3451
A3A6C19	0160-3877	5		CAPACITOR-FXD 100PF +-20% 200VDC CER	28480	0160-3877
A3A6CR1	1901-0033	2		DIODE-GEN PRP 180V 200MA DO-7	28480	1901-0033
A3A6CR2	1901-0040	1	19	DIODE-SWITCHING 30V 50MA 2NS DO-35	28480	1901-0040
A3A6CR3	1901-0040	1		DIODE-SWITCHING 30V 50MA 2NS DO-35	28480	1901-0040
A3A6CR4				NOT ASSIGNED		
A3A6CR5	1901-0033	2		DIODE-GEN PRP 180V 200MA DO-7	28480	1901-0033
A3A6CR6	1901-0033	2		DIODE-GEN PRP 180V 200MA DO-7	28480	1901-0033
A3A6CR7	1901-0033	2		DIODE-GEN PRP 180V 200MA DO-7	28480	1901-0033
A3A6CR8	1901-0040	1		DIODE-SWITCHING 30V 50MA 2NS DO-35	28480	1901-0040
A3A6CR9	1901-0033	2		DIODE-GEN PRP 180V 200MA DO-7	28480	1901-0033
A3A6CR10	1901-0033	2		DIODE-GEN PRP 180V 200MA DO-7	28480	1901-0033
A3A6CR11	1901-0040	1		DIODE-SWITCHING 30V 50MA 2NS DO-35	28480	1901-0040

See introduction to this section for ordering information
*Indicates factory selected value

Table 6-3. Replaceable Parts

Reference Designation	HP Part Number	C D	Qty	Description	Mfr Code	Mfr Part Number
A3A6MP1	1205-0085	8	1	HEAT SINK TO-66-CB	28480	1205-0085
A3A6MP2	5000-9043	6		PIN-P.C. BOARD EXTRACTOR	28480	5000-9043
A3A6MP3	5040-6843	2		BOARD EXTRACTOR	28480	5040-6843
A3A6MP4	2200-0107	6	1	SCREW-MACH 4-40 .375-IN-LG PAN-HD-POZI	00000	ORDER BY DESCRIPTION
A3A6MP5	2200-0143	0	1	SCREW-MACH 4-40 .375-IN-LG PAN-HD-POZI	00000	ORDER BY DESCRIPTION
A3A6MP6	2190-0003	8	1	WASHER-LK HLCL NO. 4 .115-IN-ID	28480	2190-0003
A3A6MP7	2260-0001	5	1	NUT-HEX-DBL-CHAM 4-40-THD .094-IN-THK	28480	2260-0001
A3A6Q1	1854-0237	7	1	TRANSISTOR NPN SI TO-66 PD=20W FT=10MHZ	28480	1854-0237
A3A6Q2	1854-0404	0		TRANSISTOR NPN SI TO-18 PD=360MW	28480	1854-0404
A3A6Q3	1854-0022	8	2	TRANSISTOR NPN SI TO-39 PD=700MW	07263	S17843
A3A6Q4	1854-0232	2	1	TRANSISTOR NPN SI TO-39 PD=1W FT=15MHZ	28480	1854-0232
A3A6Q5	1853-0038	4	1	TRANSISTOR PNP SI TO-39 PD=1W FT=100MHZ	28480	1853-0038
A3A6Q6	1853-0404	8	1	TRANSISTOR PNP SI PD=500MW FT=1.6GHZ	01295	A5T4260
A3A6Q7	1853-0007	7		TRANSISTOR PNP 2N3251 SI TO-18 PD=360MW	04713	2N3251
A3A6Q8	1854-0022	8		TRANSISTOR NPN SI TO-39 PD=700MW	07263	S17843
A3A6Q9	1854-0475	5		TRANSISTOR-DUAL NPN PD=750MW	28480	1854-0475
A3A6Q10	1853-0007	7		TRANSISTOR PNP 2N3251 SI TO-18 PD=360MW	04713	2N3251
A3A6Q11	1853-0050	0	2	TRANSISTOR PNP SI TO-18 PD=360MW	28480	1853-0050
A3A6Q12	1853-0012	4		TRANSISTOR PNP 2N2904A SI TO-39 PD=600MW	01295	2N2904A
A3A6Q13	1853-0050	0		TRANSISTOR PNP SI TO-18 PD=360MW	28480	1853-0050
A3A6R1				NOT ASSIGNED		
A3A6R2				NOT ASSIGNED		
A3A6R3	0757-0456	5	1	RESISTOR 43.2K 1% .125W F TC=0+-100	24546	C4-1/8-T0-4322-F
A3A6R4	0698-4492	1	1	RESISTOR 32.4K 1% .125W F TC=0+-100	24546	C4-1/8-T0-3242-F
A3A6R5	0757-0440	7		RESISTOR 7.5K 1% .125W F TC=0+-100	24546	C4-1/8-T0-7501-F
A3A6R6	0757-0440	7		RESISTOR 7.5K 1% .125W F TC=0+-100	24546	C4-1/8-T0-7501-F
A3A6R7	0698-0083	8		RESISTOR 1.96K 1% .125W F TC=0+-100	24546	C4-1/8-T0-1961-F
A3A6R8	0698-3440	7		RESISTOR 196 1% .125W F TC=0+-100	24546	C4-1/8-T0-196R-F
A3A6R9	0757-0346	2		RESISTOR 10 1% .125W F TC=0+-100	24546	C4-1/8-T0-10R0-F
A3A6R10	0757-0465	6	4	RESISTOR 100K 1% .125W F TC=0+-100	24546	C4-1/8-T0-1003-F
A3A6R11	0698-3157	3		RESISTOR 19.6K 1% .125W F TC=0+-100	24546	C4-1/8-T0-1962-F
A3A6R12	0757-0442	9		RESISTOR 10K 1% .125W F TC=0+-100	24546	C4-1/8-T0-1002-F
A3A6R13	0698-3440	7		RESISTOR 196 1% .125W F TC=0+-100	24546	C4-1/8-T0-196R-F
A3A6R14	0757-0401	0		RESISTOR 100 1% .125W F TC=0+-100	24546	C4-1/8-T0-101-F
A3A6R15	0757-0421	4		RESISTOR 825 1% .125W F TC=0+-100	24546	C4-1/8-T0-825R-F
A3A6R16	0811-3440	9	1	RESISTOR 125 1% 25W PW TC=0+-2	28480	0811-3440
A3A6R17	0757-0465	6		RESISTOR 100K 1% .125W F TC=0+-100	24546	C4-1/8-T0-1003-F
A3A6R18	0757-0442	9		RESISTOR 10K 1% .125W F TC=0+-100	24546	C4-1/8-T0-1002-F
A3A6R19	0757-0442	9		RESISTOR 10K 1% .125W F TC=0+-100	24546	C4-1/8-T0-1002-F
A3A6R20	0698-3155	1		RESISTOR 4.64K 1% .125W F TC=0+-100	24546	C4-1/8-T0-4641-F
A3A6R21	0698-3155	1		RESISTOR 4.64K 1% .125W F TC=0+-100	24546	C4-1/8-T0-4641-F
A3A6R22	0757-0290	5		RESISTOR 6.19K 1% .125W F TC=0+-100	19701	MF4C1/8-T0-6191-F
A3A6R23	0757-0346	2		RESISTOR 10 1% .125W F TC=0+-100	24546	C4-1/8-T0-10R0-F
A3A6R24	0811-2936	6	1	RESISTOR 15 .1% .5W PWW TC=0+-5	14140	1251-1/4-C-15R-B
A3A6R25	2100-0635	3	2	RESISTOR-TRMR 2K 10% C SIDE-ADJ 20-TRN	28480	2100-0635
A3A6R26	0757-0438	3		RESISTOR 5.11K 1% .125W F TC=0+-100	24546	C4-1/8-T0-5111-F
A3A6R27	0757-0438	3		RESISTOR 5.11K 1% .125W F TC=0+-100	24546	C4-1/8-T0-5111-F
A3A6R28	0757-0467	8	2	RESISTOR 121K 1% .125W F TC=0+-100	24546	C4-1/8-T0-1213-F
A3A6R29	0757-0346	2		RESISTOR 10 1% .125W F TC=0+-100	24546	C4-1/8-T0-10R0-F
A3A6R30	0698-8025	4	1	RESISTOR 1.91K .25% .125W F TC=0+-50	19701	MF4C1/8-T2-1911-C
A3A6R31	0757-0402	1		RESISTOR 110 1% .125W F TC=0+-100	24546	C4-1/8-T0-111-F
A3A6R32	0757-0458	7		RESISTOR 51.1K 1% .125W F TC=0+-100	24546	C4-1/8-T0-5112-F
A3A6R33	0757-0428	1		RESISTOR 1.62K 1% .125W F TC=0+-100	24546	C4-1/8-T0-1621-F
A3A6R34	2100-0635	3		RESISTOR-TRMR 2K 10% C SIDE-ADJ 20-TRN	28480	2100-0635
A3A6R35	0698-3153	9		RESISTOR 3.83K 1% .125W F TC=0+-100	24546	C4-1/8-T0-3831-F
A3A6R36	0698-3447	4		RESISTOR 422 1% .125W F TC=0+-100	24546	C4-1/8-T0-422R-F
A3A6R37	0757-0458	7		RESISTOR 51.1K 1% .125W F TC=0+-100	24546	C4-1/8-T0-5112-F
A3A6R38	0698-5673	2	1	RESISTOR 3.9K 1% .125W F TC=0+-25	28480	0698-5673
A3A6R39	0698-3155	1		RESISTOR 4.64K 1% .125W F TC=0+-100	24546	C4-1/8-T0-4641-F
A3A6R40	0698-8420	3	1	RESISTOR 4.22K 1% .125W F TC=0+-25	19701	MF4C1/8-T9-4221-F
A3A6R41	0757-0401	0		RESISTOR 100 1% .125W F TC=0+-100	24546	C4-1/8-T0-101-F
A3A6R42	0757-0346	2		RESISTOR 10 1% .125W F TC=0+-100	24546	C4-1/8-T0-10R0-F
A3A6TP1	1251-0600	0		CONNECTOR-SGL CONT PIN 1.14-MM-BSC-SZ SQ	28480	1251-0600
A3A6TP2	1251-0600	0		CONNECTOR-SGL CONT PIN 1.14-MM-BSC-SZ SQ	28480	1251-0600
A3A6TP3	1251-0600	0		CONNECTOR-SGL CONT PIN 1.14-MM-BSC-SZ SQ	28480	1251-0600
A3A6TP4	1251-0600	0		CONNECTOR-SGL CONT PIN 1.14-MM-BSC-SZ SQ	28480	1251-0600
A3A6TP5	1251-0600	0		CONNECTOR-SGL CONT PIN 1.14-MM-BSC-SZ SQ	28480	1251-0600
A3A6U1	1826-0092	3		IC OP AMP GP DUAL TO-99 PKG	28480	1826-0092
A3A6VR1	1902-0680	7	1	DIODE-ZNR 1N827 6.2V 5% DO-7 PD=.4W	24046	1N827
A3A6VR2	1902-3404	9		DIODE-ZNR 82.5V 5% DO-7 PD=.4W TC=+.082%	28480	1902-3404
A3A6VR3	1902-3323	1	1	DIODE-ZNR 42.2V 5% DO-35 PD=.4W TC=+.08%	28480	1902-3323
A3A6VR4	1902-0025	4		DIODE-ZNR 10V 5% DO-35 PD=.4W TC=+.06%	28480	1902-0025

See introduction to this section for ordering information
*Indicates factory selected value

Table 6-3. Replaceable Parts

Reference Designation	HP Part Number	C D	Qty	Description	Mfr Code	Mfr Part Number
A3A7	86701-60017	9	1	FM DRIVER ASSEMBLY	28480	86701-60017
A3A7C1	0160-0578	7	4	CAPACITOR-FXD .047UF +-1% 50VDC	28480	0160-0578
A3A7C2	0160-3879	7		CAPACITOR-FXD .01UF +-20% 100VDC CER	28480	0160-3879
A3A7C3	0160-0578	7		CAPACITOR-FXD .047UF +-1% 50VDC	28480	0160-0578
A3A7C4	0160-0573	2	1	CAPACITOR-FXD 4700PF +-20% 100VDC CER	28480	0160-0573
A3A7C5	0160-0127	2		CAPACITOR-FXD 1UF +-20% 25VDC CER	28480	0160-0127
A3A7C6	0160-3874	2	4	CAPACITOR-FXD 10PF +-.5PF 200VDC CER	28480	0160-3874
A3A7C7	0160-0127	2		CAPACITOR-FXD 1UF +-20% 25VDC CER	28480	0160-0127
A3A7C8	0160-4298	6		CAPACITOR-FXD 4700PF +-20% 250VDC CER	56289	C067F251H472MS22-CDH
A3A7C9	0160-2055	9		CAPACITOR-FXD .01UF +80-20% 100VDC CER	28480	0160-2055
A3A7C10	0160-3879	7		CAPACITOR-FXD .01UF +-20% 100VDC CER	28480	0160-3879
A3A7C11	0160-4084	8		CAPACITOR-FXD .1UF +-20% 50VDC CER	28480	0160-4084
A3A7C12	0160-0174	9	1	CAPACITOR-FXD .47UF +80-20% 25VDC CER	28480	0160-0174
A3A7C13	0160-3879	7		CAPACITOR-FXD .01UF +-20% 100VDC CER	28480	0160-3879
A3A7C14	0180-0491	5		CAPACITOR-FXD 10UF+-20% 25VDC TA	28480	0180-0491
A3A7C15	0180-0197	8		CAPACITOR-FXD 2.2UF+-10% 20VDC TA	56289	150D225X9020A2
A3A7C16	0180-0197	8		CAPACITOR-FXD 2.2UF+-10% 20VDC TA	56289	150D225X9020A2
A3A7C17	0160-3879	7		CAPACITOR-FXD .01UF +-20% 100VDC CER	28480	0160-3879
A3A7C18	0160-4084	8		CAPACITOR-FXD .1UF +-20% 50VDC CER	28480	0160-4084
A3A7C19	0160-0134	1	1	CAPACITOR-FXD 220PF +-5% 300VDC MICA	28480	0160-0134
A3A7C20	0160-3533	0	1	CAPACITOR-FXD 470PF +-5% 300VDC MICA	28480	0160-3533
A3A7C21	0160-3878	6		CAPACITOR-FXD 1000PF +-20% 100VDC CER	28480	0160-3878
A3A7C22	0160-0158	9	1	CAPACITOR-FXD 5600PF +-10% 200VDC POLYE	28480	0160-0158
A3A7C23	0180-1719	2	1	CAPACITOR-FXD 22UF+-10% 25VDC TA	06001	69F146G8
A3A7C24	0160-3879	7		CAPACITOR-FXD .01UF +-20% 100VDC CER	28480	0160-3879
A3A7C26	0180-0116	1		CAPACITOR-FXD 6.8UF+-10% 35VDC TA	56289	150D685X9035B2
A3A7C27	0160-3879	7		CAPACITOR-FXD .01UF +-20% 100VDC CER	28480	0160-3879
A3A7C28	0180-0228	6		CAPACITOR-FXD 22UF+-10% 15VDC TA	56289	150D226X9015B2
A3A7C29	0160-2055	9		CAPACITOR-FXD .01UF +80-20% 100VDC CER	28480	0160-2055
A3A7C30	0180-0116	1		CAPACITOR-FXD 6.8UF+-10% 35VDC TA	56289	150D685X9035B2
A3A7C31	0160-3879	7		CAPACITOR-FXD .01UF +-20% 100VDC CER	28480	0160-3879
A3A7C32	0160-3879	7		CAPACITOR-FXD .01UF +-20% 100VDC CER	28480	0160-3879
A3A7C33	0160-4084	8		CAPACITOR-FXD .1UF +-20% 50VDC CER	28480	0160-4084
A3A7C34	0160-4084	8		CAPACITOR-FXD .1UF +-20% 50VDC CER	28480	0160-4084
A3A7C35	0180-0234	4	1	CAPACITOR-FXD 33UF+-20% 75VDC TA	06001	69F286G7
A3A7C36	0180-0228	6		CAPACITOR-FXD 22UF+-10% 15VDC TA	56289	150D226X9015B2
A3A7C37	0160-3879	7		CAPACITOR-FXD .01UF +-20% 100VDC CER	28480	0160-3879
A3A7C38	0160-3879	7		CAPACITOR-FXD .01UF +-20% 100VDC CER	28480	0160-3879
A3A7C39	0180-0491	5		CAPACITOR-FXD 10UF+-20% 25VDC TA	28480	0180-0491
A3A7C40	0160-3879	7		CAPACITOR-FXD .01UF +-20% 100VDC CER	28480	0160-3879
A3A7C41	0160-3879	7		CAPACITOR-FXD .01UF +-20% 100VDC CER	28480	0160-3879
A3A7C42	0160-2202	8	1	CAPACITOR-FXD 75PF +-5% 300VDC MICA	28480	0160-2202
A3A7C43	0140-0194	1	2	CAPACITOR-FXD 110PF +-5% 300VDC MICA	72136	DM15F111J0300WV1CR
A3A7C44	0160-3872	0	1	CAPACITOR-FXD 2.2PF +-.25PF 200VDC CER	28480	0160-3872
A3A7C45	0160-0578	7		CAPACITOR-FXD .047UF +-1% 50VDC	28480	0160-0578
A3A7C46	0160-0578	7		CAPACITOR-FXD .047UF +-1% 50VDC	28480	0160-0578
A3A7C47	0160-3878	6		CAPACITOR-FXD 1000PF +-20% 100VDC CER	28480	0160-3878
A3A7C48*	0160-2248	2	1	CAPACITOR-FXD 4.3PF +-.25PF 500VDC CER	28480	0160-2248
A3A7C49	0160-3491	9	1	CAPACITOR-FXD .47UF +-20% 50VDC CER	28480	0160-3491
A3A7C50	0160-3874	2		CAPACITOR-FXD 10PF +-.5PF 200VDC CER	28480	0160-3874
A3A7CR1	1901-0040	1		DIODE-SWITCHING 30V 50MA 2NS DO-35	28480	1901-0040
A3A7CR2	1901-0040	1		DIODE-SWITCHING 30V 50MA 2NS DO-35	28480	1901-0040
A3A7CR3	1901-0040	1		DIODE-SWITCHING 30V 50MA 2NS DO-35	28480	1901-0040
A3A7CR4	1901-0040	1		DIODE-SWITCHING 30V 50MA 2NS DO-35	28480	1901-0040
A3A7CR5	1901-0040	1		DIODE-SWITCHING 30V 50MA 2NS DO-35	28480	1901-0040
A3A7CR6	1901-0040	1		DIODE-SWITCHING 30V 50MA 2NS DO-35	28480	1901-0040
A3A7CR7	1901-0040	1		DIODE-SWITCHING 30V 50MA 2NS DO-35	28480	1901-0040
A3A7K1	0490-0564	0	2	RELAY-REED 1C 350MA 70VAC 5VDC-COIL 10VA	28480	0490-0564
A3A7K2	0490-0564	0		RELAY-REED 1C 350MA 70VAC 5VDC-COIL 10VA	28480	0490-0564
A3A7L1	9100-2259	8		INDUCTOR RF-CH-MLD 1.5UH 10% .105DX.26LG	28480	9100-2259
A3A7MP1	1205-0011	0	2	HEAT SINK TO-5/TO-39-CS	28480	1205-0011
A3A7MP2	1205-0037	0	2	HEAT SINK TO-18-CS	28480	1205-0037
A3A7MP3	1200-0173	5		INSULATOR-XSTR DAP-GL	28480	1200-0173
A3A7MP4	5000-9043	6		PIN-P.C. BOARD EXTRACTOR	28480	5000-9043
A3A7MP5	5040-6843	2		BOARD EXTRACTOR	28480	5040-6843
A3A7Q1	1854-0013	7	1	TRANSISTOR NPN 2N2218A SI TO-5 PD=800MW	04713	2N2218A
A3A7Q2	1853-0012	4		TRANSISTOR PNP 2N2904A SI TO-39 PD=600MW	01295	2N2904A
A3A7Q3	1854-0401	7	1	TRANSISTOR NPN SI TO-72 PD=200MW	28480	1854-0401
A3A7Q4	1854-0404	0		TRANSISTOR NPN SI TO-18 PD=360MW	28480	1854-0404
A3A7Q5	1854-0404	0		TRANSISTOR NPN SI TO-18 PD=360MW	28480	1854-0404
A3A7Q6	1854-0345	8		TRANSISTOR NPN 2N5179 SI TO-72 PD=200MW	04713	2N5179
A3A7Q7	1854-0023	9	1	TRANSISTOR NPN SI TO-18 PD=360MW	28480	1854-0023
A3A7Q8	1854-0247	9		TRANSISTOR NPN SI TO-39 PD=1W FT=800MHZ	28480	1854-0247
A3A7Q9	1853-0451	5		TRANSISTOR PNP 2N3799 SI TO-18 PD=360MW	01295	2N3799
A3A7Q10	1853-0451	5		TRANSISTOR PNP 2N3799 SI TO-18 PD=360MW	01295	2N3799

See introduction to this section for ordering information
*Indicates factory selected value

Table 6-3. Replaceable Parts

Reference Designation	HP Part Number	C D	Qty	Description	Mfr Code	Mfr Part Number
A3A7Q11	1854-0404	0		TRANSISTOR NPN SI TO-18 PD=360MW	28480	1854-0404
A3A7Q12	1855-0020	8	1	TRANSISTOR J-FET N-CHAN D-MODE TO-18 SI	28480	1855-0020
A3A7Q13	1853-0281	9	1	TRANSISTOR PNP 2N2907A SI TO-18 PD=400MW	04713	2N2907A
A3A7Q14	1853-0451	5		TRANSISTOR PNP 2N3799 SI TO-18 PD=360MW	01295	2N3799
A3A7Q15	1855-0417	7	1	TRANSISTOR J-FET N-CHAN D-MODE TO-18 SI	28480	1855-0417
A3A7R1	0757-0447	4		RESISTOR 16.2K 1% .125W F TC=0+-100	24546	C4-1/8-T0-1622-F
A3A7R2	0698-3150	6		RESISTOR 2.37K 1% .125W F TC=0+-100	24546	C4-1/8-T0-2371-F
A3A7R3	0757-0443	0		RESISTOR 11K 1% .125W F TC=0+-100	24546	C4-1/8-T0-1102-F
A3A7R4	0757-0465	6		RESISTOR 100K 1% .125W F TC=0+-100	24546	C4-1/8-T0-1003-F
A3A7R5	0698-7277	6	1	RESISTOR 51.1K 1% .05W F TC=0+-100	24546	C3-1/8-T0-5112-F
A3A7R6	0698-7258	3	1	RESISTOR 8.25K 1% .05W F TC=0+-100	24546	C3-1/8-T0-8251-F
A3A7R7	0698-0083	8		RESISTOR 1.96K 1% .125W F TC=0+-100	24546	C4-1/8-T0-1961-F
A3A7R8	0757-0465	6		RESISTOR 100K 1% .125W F TC=0+-100	24546	C4-1/8-T0-1003-F
A3A7R9	0698-3441	8		RESISTOR 215 1% .125W F TC=0+-100	24546	C4-1/8-T0-215R-F
A3A7R10	0698-0085	0		RESISTOR 2.61K 1% .125W F TC=0+-100	24546	C4-1/8-T0-2611-F
A3A7R11	0698-3432	7	1	RESISTOR 26.1 1% .125W F TC=0+-100	03888	PME55-1/8-T0-26R1-F
A3A7R12				NOT ASSIGNED		
A3A7R13	0698-3154	0		RESISTOR 4.22K 1% .125W F TC=0+-100	24546	C4-1/8-T0-4221-F
A3A7R14				NOT ASSIGNED		
A3A7R15	0757-0346	2		RESISTOR 10 1% .125W F TC=0+-100	24546	C4-1/8-T0-10R0-F
A3A7R16	0757-0346	2		RESISTOR 10 1% .125W F TC=0+-100	24546	C4-1/8-T0-10R0-F
A3A7R17	0757-0346	2		RESISTOR 10 1% .125W F TC=0+-100	24546	C4-1/8-T0-10R0-F
A3A7R18	0757-0346	2		RESISTOR 10 1% .125W F TC=0+-100	24546	C4-1/8-T0-10R0-F
A3A7R19	0757-0346	2		RESISTOR 10 1% .125W F TC=0+-100	24546	C4-1/8-T0-10R0-F
A3A7R20	0757-0346	2		RESISTOR 10 1% .125W F TC=0+-100	24546	C4-1/8-T0-10R0-F
A3A7R21	0757-0401	0		RESISTOR 100 1% .125W F TC=0+-100	24546	C4-1/8-T0-101-F
A3A7R22	0698-3155	1		RESISTOR 4.64K 1% .125W F TC=0+-100	24546	C4-1/8-T0-4641-F
A3A7R23	0698-3444	1		RESISTOR 316 1% .125W F TC=0+-100	24546	C4-1/8-T0-316R-F
A3A7R24	0698-7224	3		RESISTOR 316 1% .05W F TC=0+-100	24546	C3-1/8-T0-316R-F
A3A7R25				NOT ASSIGNED		
A3A7R26	0698-7276	5	2	RESISTOR 46.4K 1% .05W F TC=0+-100	24546	C3-1/8-T0-4642-F
A3A7R27	0698-7276	5		RESISTOR 46.4K 1% .05W F TC=0+-100	24546	C3-1/8-T0-4642-F
A3A7R28	2100-3353	8	1	RESISTOR-TRMR 20K 10% C SIDE-ADJ 1-TRN	28480	2100-3353
A3A7R29	0698-0083	8		RESISTOR 1.96K 1% .125W F TC=0+-100	24546	C4-1/8-T0-1961-F
A3A7R30	0683-1555	0	2	RESISTOR 1.5M 5% .25W FC TC=-900/+1100	01121	CB1555
A3A7R31	0698-4414	7	2	RESISTOR 158 1% .125W F TC=0+-100	24546	C4-1/8-T0-158R-F
A3A7R32	0698-3157	3		RESISTOR 19.6K 1% .125W F TC=0+-100	24546	C4-1/8-T0-1962-F
A3A7R33	0698-7271	0	1	RESISTOR 28.7K 1% .05W F TC=0+-100	24546	C3-1/8-T0-2872-F
A3A7R34	0698-7283	4	1	RESISTOR 90.9K 1% .05W F TC=0+-100	24546	C3-1/8-T0-9092-F
A3A7R35	0757-0458	7		RESISTOR 51.1K 1% .125W F TC=0+-100	24546	C4-1/8-T0-5112-F
A3A7R36	0698-7272	1	1	RESISTOR 31.6K 1% .05W F TC=0+-100	24546	C3-1/8-T0-3162-F
A3A7R37	0757-0416	7		RESISTOR 511 1% .125W F TC=0+-100	24546	C4-1/8-T0-511R-F
A3A7R38	0757-0316	6	1	RESISTOR 42.2 1% .125W F TC=0+-100	24546	C4-1/8-T0-42R2-F
A3A7R39	0698-3155	1		RESISTOR 4.64K 1% .125W F TC=0+-100	24546	C4-1/8-T0-4641-F
A3A7R40	2100-3354	9	1	RESISTOR-TRMR 50K 10% C SIDE-ADJ 1-TRN	28480	2100-3354
A3A7R41	0757-0458	7		RESISTOR 51.1K 1% .125W F TC=0+-100	24546	C4-1/8-T0-5112-F
A3A7R42	0698-3153	9		RESISTOR 3.83K 1% .125W F TC=0+-100	24546	C4-1/8-T0-3831-F
A3A7R43	0698-3152	8	2	RESISTOR 3.48K 1% .125W F TC=0+-100	24546	C4-1/8-T0-3481-F
A3A7R44	0698-7229	8		RESISTOR 511 1% .05W F TC=0+-100	24546	C3-1/8-T0-511R-F
A3A7R45	0757-0416	7		RESISTOR 511 1% .125W F TC=0+-100	24546	C4-1/8-T0-511R-F
A3A7R46	2100-3350	5	1	RESISTOR-TRMR 200 10% C SIDE-ADJ 1-TRN	28480	2100-3350
A3A7R47	0757-0420	3		RESISTOR 750 1% .125W F TC=0+-100	24546	C4-1/8-T0-751-F
A3A7R48	0757-0346	2		RESISTOR 10 1% .125W F TC=0+-100	24546	C4-1/8-T0-10R0-F
A3A7R49	0698-3429	2		RESISTOR 19.6 1% .125W F TC=0+-100	03888	PME55-1/8-T0-19R6-F
A3A7R50	0757-0346	2		RESISTOR 10 1% .125W F TC=0+-100	24546	C4-1/8-T0-10R0-F
A3A7R51	0757-0346	2		RESISTOR 10 1% .125W F TC=0+-100	24546	C4-1/8-T0-10R0-F
A3A7R52	0698-3155	1		RESISTOR 4.64K 1% .125W F TC=0+-100	24546	C4-1/8-T0-4641-F
A3A7R53	0698-0083	8		RESISTOR 1.96K 1% .125W F TC=0+-100	24546	C4-1/8-T0-1961-F
A3A7R54	0698-3155	1		RESISTOR 4.64K 1% .125W F TC=0+-100	24546	C4-1/8-T0-4641-F
A3A7R55	0698-3443	0		RESISTOR 287 1% .125W F TC=0+-100	24546	C4-1/8-T0-287R-F
A3A7R56	0698-3150	6		RESISTOR 2.37K 1% .125W F TC=0+-100	24546	C4-1/8-T0-2371-F
A3A7R57	0757-0442	9		RESISTOR 10K 1% .125W F TC=0+-100	24546	C4-1/8-T0-1002-F
A3A7R58	0757-0441	8		RESISTOR 8.25K 1% .125W F TC=0+-100	24546	C4-1/8-T0-8251-F
A3A7R59	0757-0441	8		RESISTOR 8.25K 1% .125W F TC=0+-100	24546	C4-1/8-T0-8251-F
A3A7R60	0757-0447	4		RESISTOR 16.2K 1% .125W F TC=0+-100	24546	C4-1/8-T0-1622-F
A3A7R61	0698-0083	8		RESISTOR 1.96K 1% .125W F TC=0+-100	24546	C4-1/8-T0-1961-F
A3A7R62	0698-3447	4		RESISTOR 422 1% .125W F TC=0+-100	24546	C4-1/8-T0-422R-F
A3A7R63	0698-3438	3		RESISTOR 147 1% .125W F TC=0+-100	24546	C4-1/8-T0-147R-F
A3A7R64				NOT ASSIGNED		
A3A7R65 *	0757-0438	3		RESISTOR 5.11K 1% .125W F TC=0+-100	24546	C4-1/8-T0-5111-F
A3A7R66	0698-3442	9		RESISTOR 237 1% .125W F TC=0+-100	24546	C4-1/8-T0-237R-F
A3A7R67 *	0698-3437	2	1	RESISTOR 133 1% .125W F TC=0+-100	24546	C4-1/8-T0-133R-F
A3A7R68	0757-0419	0		RESISTOR 681 1% .125W F TC=0+-100	24546	C4-1/8-T0-681R-F
A3A7R69	0757-0428	1		RESISTOR 1.62K 1% .125W F TC=0+-100	24546	C4-1/8-T0-1621-F
A3A7R70	0757-0424	7	2	RESISTOR 1.1K 1% .125W F TC=0+-100	24546	C4-1/8-T0-1101-F

See introduction to this section for ordering information
*Indicates factory selected value

Table 6-3. Replaceable Parts

Reference Designation	HP Part Number	C D	Qty	Description	Mfr Code	Mfr Part Number
A3A7R71	0686-1525	0	1	RESISTOR 1.5K 5% .5W CC TC=0+647	01121	EB1525
A3A7R72	0757-0346	2		RESISTOR 10 1% .125W F TC=0+-100	24546	C4-1/8-T0-10R0-F
A3A7R73	0757-0802	5	2	RESISTOR 162 1% .5W F TC=0+-100	28480	0757-0802
A3A7R74	0757-0394	0		RESISTOR 51.1 1% .125W F TC=0+-100	24546	C4-1/8-T0-51R1-F
A3A7R75*	0698-6113	7	1	RESISTOR 1.82K .25% .125W F TC=0+-100	28480	0698-6113
A3A7R76				NOT ASSIGNED		
A3A7R77	0757-0420	3		RESISTOR 750 1% .125W F TC=0+-100	24546	C4-1/8-T0-751-F
A3A7R78	0757-0802	5		RESISTOR 162 1% .5W F TC=0+-100	28480	0757-0802
A3A7R79	0698-3452	1	1	RESISTOR 147K 1% .125W F TC=0+-100	24546	C4-1/8-T0-1473-F
A3A7R80	0757-0458	7		RESISTOR 51.1K 1% .125W F TC=0+-100	24546	C4-1/8-T0-5112-F
A3A7R81	0698-7224	3		RESISTOR 316 1% .05W F TC=0+-100	24546	C3-1/8-T0-316R-F
A3A7R82	0698-7224	3		RESISTOR 316 1% .05W F TC=0+-100	24546	C3-1/8-T0-316R-F
A3A7R83	0683-1555	0		RESISTOR 1.5M 5% .25W FC TC=-900/+1100	01121	CB1555
A3A7R84	0698-4414	7		RESISTOR 158 1% .125W F TC=0+-100	24546	C4-1/8-T0-158R-F
A3A7R85	0698-7212	9		RESISTOR 100 1% .05W F TC=0+-100	24546	C3-1/8-T0-100R-F
A3A7R86	0757-0279	0		RESISTOR 3.16K 1% .125W F TC=0+-100	24546	C4-1/8-T0-3161-F
A3A7TP1	1251-0600	0		CONNECTOR-SGL CONT PIN 1.14-MM-BSC-SZ SQ	28480	1251-0600
A3A7TP2	1251-0600	0		CONNECTOR-SGL CONT PIN 1.14-MM-BSC-SZ SQ	28480	1251-0600
A3A7TP3	1251-0600	0		CONNECTOR-SGL CONT PIN 1.14-MM-BSC-SZ SQ	28480	1251-0600
A3A7TP4	1251-0600	0		CONNECTOR-SGL CONT PIN 1.14-MM-BSC-SZ SQ	28480	1251-0600
A3A7TP5	1251-0600	0		CONNECTOR-SGL CONT PIN 1.14-MM-BSC-SZ SQ	28480	1251-0600
A3A7U1	1826-0261	8		IC OP AMP LOW-NOISE TO-99 PKG	28480	1826-0261
A3A7U2	1826-0081	0	1	IC OP AMP WB TO-99 PKG	27014	LM318H
A3A7U3	1826-0044	5	2	IC OP AMP GP DUAL 14-DIP-C PKG	07263	UA739DC
A3A8	86701-60083	9	1	10MHZ REF OSC ASSY (EXCEPT OPT. 002)	28480	86701-60083
A3A8MP1	86701-00043	5	1	SUPPORT-TOP MOUNT (SUPPLIED AS SUPPORT BRACKET FOR 86701-60083)	28480	86701-00043
A3A8P1				NSR, PART OF A3A8		
A3A8W1				NSR, PART OF A3A8		
A3A9	08673-60091	0	1	YTO LOOP ASSEMBLY	28480	08673-60091
A3A9C1	0160-3036	8	6	CAPACITOR-FDTHRU 5000PF +80 -20% 200V	28480	0160-3036
A3A9C2	0160-3036	8		CAPACITOR-FDTHRU 5000PF +80 -20% 200V	28480	0160-3036
A3A9C3	0160-4748	1	3	CAPACITOR-FDTHRU 1000PF 20% 200V CER	28480	0160-4748
A3A9C4	0160-3036	8		CAPACITOR-FDTHRU 5000PF +80 -20% 200V	28480	0160-3036
A3A9C5	0160-3036	8		CAPACITOR-FDTHRU 5000PF +80 -20% 200V	28480	0160-3036
A3A9C6	0160-4748	1		CAPACITOR-FDTHRU 1000PF 20% 200V CER	28480	0160-4748
A3A9C7	0160-3036	8		CAPACITOR-FDTHRU 5000PF +80 -20% 200V	28480	0160-3036
A3A9C8	0160-4748	1		CAPACITOR-FDTHRU 1000PF 20% 200V CER	28480	0160-4748
A3A9C9	0160-3036	8		CAPACITOR-FDTHRU 5000PF +80 -20% 200V	28480	0160-3036
A3A9J1	1250-0691	7	6	CONNECTOR-RF SMB M SGL-HOLE-FR 50-OHM	28480	1250-0691
A3A9J2	1250-0691	7		CONNECTOR-RF SMB M SGL-HOLE-FR 50-OHM	28480	1250-0691
A3A9J3	1250-0691	7		CONNECTOR-RF SMB M SGL-HOLE-FR 50-OHM	28480	1250-0691
A3A9J4	1250-0691	7		CONNECTOR-RF SMB M SGL-HOLE-FR 50-OHM	28480	1250-0691
A3A9J5	1250-0691	7		CONNECTOR-RF SMB M SGL-HOLE-FR 50-OHM	28480	1250-0691
A3A9J6	1250-0691	7		CONNECTOR-RF SMB M SGL-HOLE-FR 50-OHM	28480	1250-0691
A3A9MP1	0590-0578	8	1	THREADED INSERT-STDF 2-56 .196-IN-LG SST	28480	0590-0578
A3A9MP2	1250-1142	5	1	WASHER-LK INTL T 1/2 IN .26-IN-ID	28480	1250-1142
A3A9MP3	1250-1143	6	1	NUT-RF CONN,SERIES SMA,HEX,1/4-36 THRD	16179	1707
A3A9MP4	1400-0024	9	1	CLAMP-CABLE .25-DIA .5-WD NYL	28480	1400-0024
A3A9MP5	2360-0331	6	1	SCREW-MACH 6-32 .25-IN-LG PAN-HD-POZI	28480	2360-0331
A3A9MP6	2360-0332	7	1	SCREW-MACH 6-32 .312-IN-LG PAN-HD-POZI	28480	2360-0332
A3A9MP7	3050-0227	3	1	WASHER-FL MTLC NO. 6 .149-IN-ID	28480	3050-0227
A3A9MP8	6960-0016	0	1	PLUG-HOLE TR-HD FOR .125-D-HOLE NYL	28480	6960-0016
A3A9MP9	86701-00058	2	1	DECK-YTO PHASE LOCK	28480	86701-00058
A3A9MP10	86701-00010	6	1	COVER-SAMPLER	28480	86701-00010
A3A9MP11	86701-00011	7	1	COVER-PHASE LOCK	28480	86701-00011
A3A9MP12	86701-00054	8	1	SPACER-SAMPLER	28480	86701-00054
A3A9MP13	86701-20009	5	1	HOUSING-CASTING	28480	86701-20009
A3A9MP14	86701-40001	9		EXTRACTOR-P.C. BOARD	28480	86701-40001
A3A9U1	5086-7097	6	1	SAMPLER-2-6.5 GHZ	28480	5086-7097
A3A9W1	86701-20064	2	1	CABLE ASSEMBLY- YTO OUTPUT	28480	86701-20064
A3A9W2	86701-20066	4	1	CABLE ASSEMBLY- ATTENUATOR OUTPUT	28480	86701-20066
A3A9W3	86701-20065	3	1	CABLE ASSEMBLY- FILTER INPUT	28480	86701-20065
A3A9W4	86701-60052	2	1	CABLE ASSEMBLY- COAX, BLACK	28480	86701-60052
A3A9A1	0955-0098	1	1	DIRECTIONAL COUPLER ASSEMBLY	28480	0955-0098
A3A9A2	86701-60089	5	1	YTO INTERCONNECT ASSEMBLY	28480	86701-60089
A3A9A2J1	1250-0543	8	1	CONNECTOR-RF SM-SNP M PC 50-OHM	28480	1250-0543

See introduction to this section for ordering information
*Indicates factory selected value

Table 6-3. Replaceable Parts

Reference Designation	HP Part Number	C D	Qty	Description	Mfr Code	Mfr Part Number
A3A9A2W1	86701-60010	2	1	CABLE ASSY-YTO LOOP RIBBON	28480	86701-60010
A3A9A2W2	86701-60009	9	1	CABLE ASSY-YTO LOOP RIBBON	28480	86701-60009
A3A9A3	5086-7366	2	1	2-6.5 GHZ YTO ASSEMBLY	28480	5086-7366
A3A9A3	5086-6366	0	1	2-6.5 GHZ YTO ASSY(RESTORED 5086-7366)	28480	5086-6366
A3A9A4	86701-60024	8	1	YTO PHASE DETECTOR ASSEMBLY	28480	86701-60024
A3A9A4C1	0160-2307	4	2	CAPACITOR-FXD 47PF +-5% 300VDC MICA	28480	0160-2307
A3A9A4C2	0160-2307	4		CAPACITOR-FXD 47PF +-5% 300VDC MICA	28480	0160-2307
A3A9A4C3	0160-0574	3		CAPACITOR-FXD .022UF +-20% 100VDC CER	28480	0160-0574
A3A9A4C4	0160-0574	3		CAPACITOR-FXD .022UF +-20% 100VDC CER	28480	0160-0574
A3A9A4C5	0160-3879	7		CAPACITOR-FXD .01UF +-20% 100VDC CER	28480	0160-3879
A3A9A4C6	0160-0574	3		CAPACITOR-FXD .022UF +-20% 100VDC CER	28480	0160-0574
A3A9A4C7				NOT ASSIGNED		
A3A9A4C8				NOT ASSIGNED		
A3A9A4C9	0160-3538	5	2	CAPACITOR-FXD 750PF +-5% 100VDC MICA	28480	0160-3538
A3A9A4C10	0160-3538	5		CAPACITOR-FXD 750PF +-5% 100VDC MICA	28480	0160-3538
A3A9A4C11	0160-0165	8	1	CAPACITOR-FXD .056UF +-10% 200VDC POLYE	28480	0160-0165
A3A9A4C12	0160-0575	4		CAPACITOR-FXD .047UF +-20% 50VDC CER	28480	0160-0575
A3A9A4C13	0160-3874	2		CAPACITOR-FXD 10PF +-.5PF 200VDC CER	28480	0160-3874
A3A9A4C14	0160-2453	1	1	CAPACITOR-FXD .22UF +-10% 80VDC POLYE	28480	0160-2453
A3A9A4C15	0160-2055	9		CAPACITOR-FXD .01UF +80-20% 100VDC CER	28480	0160-2055
A3A9A4C16	0160-0168	1	1	CAPACITOR-FXD .1UF +-10% 200VDC POLYE	28480	0160-0168
A3A9A4C17	0160-2055	9		CAPACITOR-FXD .01UF +80-20% 100VDC CER	28480	0160-2055
A3A9A4C18	0160-2055	9		CAPACITOR-FXD .01UF +80-20% 100VDC CER	28480	0160-2055
A3A9A4C19	0180-0116	1		CAPACITOR-FXD 6.8UF+-10% 35VDC TA	56289	150D685X9035B2
A3A9A4C20	0180-0197	8		CAPACITOR-FXD 2.2UF+-10% 20VDC TA	56289	150D225X9020A2
A3A9A4C21	0180-0197	8		CAPACITOR-FXD 2.2UF+-10% 20VDC TA	56289	150D225X9020A2
A3A9A4C22	0160-2055	9		CAPACITOR-FXD .01UF +80-20% 100VDC CER	28480	0160-2055
A3A9A4C23	0160-3874	2		CAPACITOR-FXD 10PF +-.5PF 200VDC CER	28480	0160-3874
A3A9A4C24	0160-0574	3		CAPACITOR-FXD .022UF +-20% 100VDC CER	28480	0160-0574
A3A9A4C25	0140-0190	7		CAPACITOR-FXD 39PF +-5% 300VDC MICA	72136	DM15E390J0300WV1CR
A3A9A4C26	0160-3490	8	1	CAPACITOR-FXD 1UF +-20% 50VDC CER	28480	0160-3490
A3A9A4C27	0160-0574	3		CAPACITOR-FXD .022UF +-20% 100VDC CER	28480	0160-0574
A3A9A4C28	0160-4084	8		CAPACITOR-FXD .1UF +-20% 50VDC CER	28480	0160-4084
A3A9A4C29	0160-4084	8		CAPACITOR-FXD .1UF +-20% 50VDC CER	28480	0160-4084
A3A9A4C30	0160-2200	6	1	CAPACITOR-FXD 43PF +-5% 300VDC MICA	28480	0160-2200
A3A9A4C31	0160-2264	2	2	CAPACITOR-FXD 20PF +-5% 500VDC CER 0+-30	28480	0160-2264
A3A9A4C32	0140-0194	1		CAPACITOR-FXD 110PF +-5% 300VDC MICA	72136	DM15F111J0300WV1CR
A3A9A4C33	0160-4084	8		CAPACITOR-FXD .1UF +-20% 50VDC CER	28480	0160-4084
A3A9A4CR1	1901-0040	1		DIODE-SWITCHING 30V 50MA 2NS DO-35	28480	1901-0040
A3A9A4CR2	1901-0040	1		DIODE-SWITCHING 30V 50MA 2NS DO-35	28480	1901-0040
A3A9A4CR3	1901-0539	3		DIODE-SM SIG SCHOTTKY	28480	1901-0539
A3A9A4CR4	1901-0040	1		DIODE-SWITCHING 30V 50MA 2NS DO-35	28480	1901-0040
A3A9A4CR5	1901-0050	3	3	DIODE-SWITCHING 80V 200MA 2NS DO-35	28480	1901-0050
A3A9A4CR6	1901-0040	1		DIODE-SWITCHING 30V 50MA 2NS DO-35	28480	1901-0040
A3A9A4CR7	1901-0040	1		DIODE-SWITCHING 30V 50MA 2NS DO-35	28480	1901-0040
A3A9A4CR8				NOT ASSIGNED		
A3A9A4CR9				NOT ASSIGNED		
A3A9A4CR10				NOT ASSIGNED		
A3A9A4CR11	1901-0050	3		DIODE-SWITCHING 80V 200MA 2NS DO-35	28480	1901-0050
A3A9A4CR12	1901-0040	1		DIODE-SWITCHING 30V 50MA 2NS DO-35	28480	1901-0040
A3A9A4CR13	1901-0040	1		DIODE-SWITCHING 30V 50MA 2NS DO-35	28480	1901-0040
A3A9A4CR14	1901-0040	1		DIODE-SWITCHING 30V 50MA 2NS DO-35	28480	1901-0040
A3A9A4L1	9100-2254	3		INDUCTOR RF-CH-MLD 390NH 10% .105DX.26LG	28480	9100-2254
A3A9A4L2	9100-1620	5		INDUCTOR RF-CH-MLD 15UH 10% .166DX.385LG	28480	9100-1620
A3A9A4L3	9100-1620	5		INDUCTOR RF-CH-MLD 15UH 10% .166DX.385LG	28480	9100-1620
A3A9A4L4	9100-1641	0		INDUCTOR RF-CH-MLD 240UH 5% .166DX.385LG	28480	9100-1641
A3A9A4L5	9100-1620	5		INDUCTOR RF-CH-MLD 15UH 10% .166DX.385LG	28480	9100-1620
A3A9A4L6	9100-1641	0		INDUCTOR RF-CH-MLD 240UH 5% .166DX.385LG	28480	9100-1641
A3A9A4L7	9100-0368	6		INDUCTOR RF-CH-MLD 330NH 10% .105DX.26LG	28480	9100-0368
A3A9A4L8	9140-0179	1	2	INDUCTOR RF-CH-MLD 22UH 10% .166DX.385LG	28480	9140-0179
A3A9A4L9	9100-2254	3		INDUCTOR RF-CH-MLD 390NH 10% .105DX.26LG	28480	9100-2254
A3A9A4L10	9100-0368	6		INDUCTOR RF-CH-MLD 330NH 10% .105DX.26LG	28480	9100-0368
A3A9A4L11	9140-0179	1		INDUCTOR RF-CH-MLD 22UH 10% .166DX.385LG	28480	9140-0179
A3A9A4Q1	1854-0404	0		TRANSISTOR NPN SI TO-18 PD=360MW	28480	1854-0404
A3A9A4Q2	1853-0451	5		TRANSISTOR PNP 2N3799 SI TO-18 PD=360MW	01295	2N3799
A3A9A4Q3	1855-0395	0	1	TRANSISTOR J-FET N-CHAN D-MODE TO-52 SI	17856	FN2645
A3A9A4Q4	1854-0475	5		TRANSISTOR-DUAL NPN PD=750MW	28480	1854-0475
A3A9A4Q5	1854-0404	0		TRANSISTOR NPN SI TO-18 PD=360MW	28480	1854-0404
A3A9A4R1	0698-7288	9	1	RESISTOR 147K 1% .05W F TC=0+-100	24546	C3-1/8-T0-1473-F
A3A9A4R2	0757-0464	5	1	RESISTOR 90.9K 1% .125W F TC=0+-100	24546	C4-1/8-T0-9092-F
A3A9A4R3	0757-0442	9		RESISTOR 10K 1% .125W F TC=0+-100	24546	C4-1/8-T0-1002-F
A3A9A4R4	0698-0083	8		RESISTOR 1.96K 1% .125W F TC=0+-100	24546	C4-1/8-T0-1961-F
A3A9A4R5	0757-0416	7		RESISTOR 511 1% .125W F TC=0+-100	24546	C4-1/8-T0-511R-F

See introduction to this section for ordering information
*Indicates factory selected value

Table 6-3. Replaceable Parts

Reference Designation	HP Part Number	C D	Qty	Description	Mfr Code	Mfr Part Number
A3A9A4R6	0698-7212	9		RESISTOR 100 1% .05W F TC=0+-100	24546	C3-1/8-TO-100R-F
A3A9A4R7	0698-7219	6		RESISTOR 196 1% .05W F TC=0+-100	24546	C3-1/8-TO-196R-F
A3A9A4R8	0698-7212	9		RESISTOR 100 1% .05W F TC=0+-100	24546	C3-1/8-TO-100R-F
A3A9A4R9	0698-7219	6		RESISTOR 196 1% .05W F TC=0+-100	24546	C3-1/8-TO-196R-F
A3A9A4R10	0698-3429	2		RESISTOR 19.6 1% .125W F TC=0+-100	03888	PME55-1/8-T0-19R6-F
A3A9A4R11	0698-3429	2		RESISTOR 19.6 1% .125W F TC=0+-100	03888	PME55-1/8-T0-19R6-F
A3A9A4R12	0698-3440	7		RESISTOR 196 1% .125W F TC=0+-100	24546	C4-1/8-T0-196R-F
A3A9A4R13	0698-3440	7		RESISTOR 196 1% .125W F TC=0+-100	24546	C4-1/8-T0-196R-F
A3A9A4R14	0757-0458	7		RESISTOR 51.1K 1% .125W F TC=0+-100	24546	C4-1/8-T0-5112-F
A3A9A4R15	0698-3155	1		RESISTOR 4.64K 1% .125W F TC=0+-100	24546	C4-1/8-T0-4641-F
A3A9A4R16	0757-0280	3		RESISTOR 1K 1% .125W F TC=0+-100	24546	C4-1/8-T0-1001-F
A3A9A4R17	0757-0280	3		RESISTOR 1K 1% .125W F TC=0+-100	24546	C4-1/8-T0-1001-F
A3A9A4R18	0757-0438	3		RESISTOR 5.11K 1% .125W F TC=0+-100	24546	C4-1/8-T0-5111-F
A3A9A4R19	0757-0438	3		RESISTOR 5.11K 1% .125W F TC=0+-100	24546	C4-1/8-T0-5111-F
A3A9A4R20	0757-0421	4		RESISTOR 825 1% .125W F TC=0+-100	24546	C4-1/8-T0-825R-F
A3A9A4R21	0757-1094	9		RESISTOR 1.47K 1% .125W F TC=0+-100	24546	C4-1/8-T0-1471-F
A3A9A4R22	0698-3152	8		RESISTOR 3.48K 1% .125W F TC=0+-100	24546	C4-1/8-T0-3481-F
A3A9A4R23				NOT ASSIGNED		
A3A9A4R24	0698-3157	3		RESISTOR 19.6K 1% .125W F TC=0+-100	24546	C4-1/8-T0-1962-F
A3A9A4R25	0757-0416	7		RESISTOR 511 1% .125W F TC=0+-100	24546	C4-1/8-T0-511R-F
A3A9A4R26	0698-4020	1	1	RESISTOR 9.53K 1% .125W F TC=0+-100	24546	C4-1/8-T0-9531-F
A3A9A4R27	0698-0085	0		RESISTOR 2.61K 1% .125W F TC=0+-100	24546	C4-1/8-T0-2611-F
A3A9A4R28	0757-0438	3		RESISTOR 5.11K 1% .125W F TC=0+-100	24546	C4-1/8-T0-5111-F
A3A9A4R29	0757-0394	0		RESISTOR 51.1 1% .125W F TC=0+-100	24546	C4-1/8-T0-51R1-F
A3A9A4R30	2100-3212	8	1	RESISTOR-TRMR 200 10% C TOP-ADJ 1-TRN	28480	2100-3212
A3A9A4R31	0757-0416	7		RESISTOR 511 1% .125W F TC=0+-100	24546	C4-1/8-T0-511R-F
A3A9A4R32	0757-0440	7		RESISTOR 7.5K 1% .125W F TC=0+-100	24546	C4-1/8-T0-7501-F
A3A9A4R33	0757-0442	9		RESISTOR 10K 1% .125W F TC=0+-100	24546	C4-1/8-T0-1002-F
A3A9A4R34	0757-0442	9		RESISTOR 10K 1% .125W F TC=0+-100	24546	C4-1/8-T0-1002-F
A3A9A4R35	0757-0421	4		RESISTOR 825 1% .125W F TC=0+-100	24546	C4-1/8-T0-825R-F
A3A9A4R36	0757-0438	3		RESISTOR 5.11K 1% .125W F TC=0+-100	24546	C4-1/8-T0-5111-F
A3A9A4R37	0757-0422	5		RESISTOR 909 1% .125W F TC=0+-100	24546	C4-1/8-T0-909R-F
A3A9A4R38	0757-0422	5		RESISTOR 909 1% .125W F TC=0+-100	24546	C4-1/8-T0-909R-F
A3A9A4R39	0757-0467	8		RESISTOR 121K 1% .125W F TC=0+-100	24546	C4-1/8-T0-1213-F
A3A9A4R40				NOT ASSIGNED		
A3A9A4R41				NOT ASSIGNED		
A3A9A4R42				NOT ASSIGNED		
A3A9A4R43	0757-0458	7		RESISTOR 51.1K 1% .125W F TC=0+-100	24546	C4-1/8-T0-5112-F
A3A9A4R44	0757-0442	9		RESISTOR 10K 1% .125W F TC=0+-100	24546	C4-1/8-T0-1002-F
A3A9A4R45	0698-3132	4		RESISTOR 261 1% .125W F TC=0+-100	24546	C4-1/8-T0-2610-F
A3A9A4R46	0698-3132	4		RESISTOR 261 1% .125W F TC=0+-100	24546	C4-1/8-T0-2610-F
A3A9A4R47	0757-0416	7		RESISTOR 511 1% .125W F TC=0+-100	24546	C4-1/8-T0-511R-F
A3A9A4R48	0698-7236	7		RESISTOR 1K 1% .05W F TC=0+-100	24546	C3-1/8-T0-1001-F
A3A9A4R49	0757-0439	4		RESISTOR 6.81K 1% .125W F TC=0+-100	24546	C4-1/8-T0-6811-F
A3A9A4R50	0698-0085	0		RESISTOR 2.61K 1% .125W F TC=0+-100	24546	C4-1/8-T0-2611-F
A3A9A4R51	0698-0083	8		RESISTOR 1.96K 1% .125W F TC=0+-100	24546	C4-1/8-T0-1961-F
A3A9A4R52	0698-0083	8		RESISTOR 1.96K 1% .125W F TC=0+-100	24546	C4-1/8-T0-1961-F
A3A9A4R53	2100-1986	9	1	RESISTOR-TRMR 1K 10% C TOP-ADJ 1-TRN	73138	82PR1K
A3A9A4R54	0698-7245	8	1	RESISTOR 2.37K 1% .05W F TC=0+-100	24546	C3-1/8-T0-2371-F
A3A9A4R55	0698-7242	5	1	RESISTOR 1.78K 1% .05W F TC=0+-100	24546	C3-1/8-T0-1781-F
A3A9A4R56	0698-7253	8	1	RESISTOR 5.11K 1% .05W F TC=0+-100	24546	C3-1/8-T0-5111-F
A3A9A4R57	0757-0418	9		RESISTOR 619 1% .125W F TC=0+-100	24546	C4-1/8-T0-619R-F
A3A9A4R58	0698-3451	0	1	RESISTOR 133K 1% .125W F TC=0+-100	24546	C4-1/8-T0-1333-F
A3A9A4TP1	1251-0600	0		CONNECTOR-SGL CONT PIN 1.14-MM-BSC-SZ SQ	28480	1251-0600
A3A9A4TP2	1251-0600	0		CONNECTOR-SGL CONT PIN 1.14-MM-BSC-SZ SQ	28480	1251-0600
A3A9A4TP3	1251-0600	0		CONNECTOR-SGL CONT PIN 1.14-MM-BSC-SZ SQ	28480	1251-0600
A3A9A4TP4	1251-0600	0		CONNECTOR-SGL CONT PIN 1.14-MM-BSC-SZ SQ	28480	1251-0600
A3A9A4TP5	1251-0600	0		CONNECTOR-SGL CONT PIN 1.14-MM-BSC-SZ SQ	28480	1251-0600
A3A9A4U1	1826-0092	3		IC OP AMP GP DUAL TO-99 PKG	28480	1826-0092
A3A9A4U2	1826-0026	3	1	IC COMPARATOR PRCN TO-99 PKG	01295	LM311L
A3A9A4U3	1826-0044	5		IC OP AMP GP DUAL 14-DIP-C PKG	07263	UA739DC
A3A9A4U4	1820-1423	4	1	IC MV TTL LS MONOSTBL RETRIG DUAL	01295	SN74LS123N
A3A9A4U5	1820-1344	8		IC PL LOOP 14-DIP-C PKG	04713	MC12040L
A3A9A4U6	1820-0802	1		IC GATE ECL NOR QUAD 2-INP	04713	MC10102P
A3A9A4U7	1820-0817	8	2	IC FF ECL D-M/S DUAL	04713	MC10131P
A3A9A4U8	1810-0204	6		NETWORK-RES 8-SIP1.0K OHM X 7	01121	208A102
A3A9A4U9	1820-0817	8		IC FF ECL D-M/S DUAL	04713	MC10131P
A3A9A4VR1	1902-1260	1	2	DIODE-ZNR 1N5525C 6.2V 2% DO-7 PD=.4W	04713	1N5525C
A3A9A4VR2	1902-1260	1		DIODE-ZNR 1N5525C 6.2V 2% DO-7 PD=.4W	04713	1N5525C
A3A9A4VR3	1902-0041	4	1	DIODE-ZNR 5.11V 5% DO-35 PD=.4W	28480	1902-0041
A3A9A4VR4	1902-3104	6	1	DIODE-ZNR 5.62V 5% DO-35 PD=.4W	28480	1902-3104
A3A9A5	86701-60023	7	1	SAMPLER ASSEMBLY	28480	86701-60023
A3A9A5C1	0121-0046	2	2	CAPACITOR-V TRMR-CER 9-35PF 200V PC-MTG	52763	304322 9/35PF N650
A3A9A5C2	0121-0046	2		CAPACITOR-V TRMR-CER 9-35PF 200V PC-MTG	52763	304322 9/35PF N650
A3A9A5C3	0180-0197	8		CAPACITOR-FXD 2.2UF+-10% 20VDC TA	56289	150D225X9020A2
A3A9A5C4	0180-0116	1		CAPACITOR-FXD 6.8UF+-10% 35VDC TA	56289	150D685X9035B2
A3A9A5C5	0160-2055	9		CAPACITOR-FXD .01UF +80-20% 100VDC CER	28480	0160-2055

See introduction to this section for ordering information
*Indicates factory selected value

Table 6-3. Replaceable Parts

Reference Designation	HP Part Number	C D	Qty	Description	Mfr Code	Mfr Part Number
A3A9A5C6	0160-2150	5	1	CAPACITOR-FXD 33PF +-5% 300VDC MICA	28480	0160-2150
A3A9A5C7	0160-2055	9		CAPACITOR-FXD .01UF +80-20% 100VDC CER	28480	0160-2055
A3A9A5C8	0160-3878	6		CAPACITOR-FXD 1000PF +-20% 100VDC CER	28480	0160-3878
A3A9A5C9	0180-0197	8		CAPACITOR-FXD 2.2UF+-10% 20VDC TA	56289	150D225X9020A2
A3A9A5C10	0160-2264	2		CAPACITOR-FXD 20PF +-5% 500VDC CER 0+-30	28480	0160-2264
A3A9A5C11	0160-3878	6		CAPACITOR-FXD 1000PF +-20% 100VDC CER	28480	0160-3878
A3A9A5C12	0160-2055	9		CAPACITOR-FXD .01UF +80-20% 100VDC CER	28480	0160-2055
A3A9A5C13	0180-0228	6		CAPACITOR-FXD 22UF+-10% 15VDC TA	56289	150D226X9015B2
A3A9A5C14	0160-2055	9		CAPACITOR-FXD .01UF +80-20% 100VDC CER	28480	0160-2055
A3A9A5C15	0160-2055	9		CAPACITOR-FXD .01UF +80-20% 100VDC CER	28480	0160-2055
A3A9A5C16	0160-3879	7		CAPACITOR-FXD .01UF +-20% 100VDC CER	28480	0160-3879
A3A9A5C17	0160-2055	9		CAPACITOR-FXD .01UF +80-20% 100VDC CER	28480	0160-2055
A3A9A5C18	0160-3878	6		CAPACITOR-FXD 1000PF +-20% 100VDC CER	28480	0160-3878
A3A9A5C19	0160-3879	7		CAPACITOR-FXD .01UF +-20% 100VDC CER	28480	0160-3879
A3A9A5C20	0160-0939	4	1	CAPACITOR-FXD 430PF +-5% 300VDC MICA	28480	0160-0939
A3A9A5C21	0160-2055	9		CAPACITOR-FXD .01UF +80-20% 100VDC CER	28480	0160-2055
A3A9A5C22	0160-2205	1	1	CAPACITOR-FXD 120PF +-5% 300VDC MICA	28480	0160-2205
A3A9A5C23	0160-2055	9		CAPACITOR-FXD .01UF +80-20% 100VDC CER	28480	0160-2055
A3A9A5C24	0140-0193	0		CAPACITOR-FXD 82PF +-5% 300VDC MICA	72136	DM15E820J0300WV1CR
A3A9A5C25	0140-0193	0		CAPACITOR-FXD 82PF +-5% 300VDC MICA	72136	DM15E820J0300WV1CR
A3A9A5C26	0160-2308	5	1	CAPACITOR-FXD 36PF +-5% 300VDC MICA	28480	0160-2308
A3A9A5C27	0160-2055	9		CAPACITOR-FXD .01UF +80-20% 100VDC CER	28480	0160-2055
A3A9A5C28	0160-2055	9		CAPACITOR-FXD .01UF +80-20% 100VDC CER	28480	0160-2055
A3A9A5C29	0160-3879	7		CAPACITOR-FXD .01UF +-20% 100VDC CER	28480	0160-3879
A3A9A5C30	0160-3879	7		CAPACITOR-FXD .01UF +-20% 100VDC CER	28480	0160-3879
A3A9A5C31	0160-2055	9		CAPACITOR-FXD .01UF +80-20% 100VDC CER	28480	0160-2055
A3A9A5C32	0160-3879	7		CAPACITOR-FXD .01UF +-20% 100VDC CER	28480	0160-3879
A3A9A5L1				NSR, PART OF CIRCUIT BOARD		
A3A9A5L2	9140-0144	0	1	INDUCTOR RF-CH-MLD 4.7UH 10% .105DX.26LG	28480	9140-0144
A3A9A5L3	9100-1623	8	1	INDUCTOR RF-CH-MLD 27UH 5% .166DX.385LG	28480	9100-1623
A3A9A5L4	9100-2251	0		INDUCTOR RF-CH-MLD 220NH 10% .105DX.26LG	28480	9100-2251
A3A9A5L5	9100-2258	7	2	INDUCTOR RF-CH-MLD 1.2UH 10% .105DX.26LG	28480	9100-2258
A3A9A5L6	9100-2258	7		INDUCTOR RF-CH-MLD 1.2UH 10% .105DX.26LG	28480	9100-2258
A3A9A5L7	9100-2891	4		INDUCTOR RF-CH-MLD 50NH 10% .105DX.26LG	28480	9100-2891
A3A9A5L8				NSR, PART OF CIRCUIT BOARD		
A3A9A5L9				NSR, PART OF CIRCUIT BOARD		
A3A9A5L10	9140-0143	9		INDUCTOR RF-CH-MLD 3.3UH 10% .105DX.26LG	28480	9140-0143
A3A9A5L11	9100-0368	6		INDUCTOR RF-CH-MLD 330NH 10% .105DX.26LG	28480	9100-0368
A3A9A5L12	9100-2249	6		INDUCTOR RF-CH-MLD 150NH 10% .105DX.26LG	28480	9100-2249
A3A9A5L13	9100-2250	9	1	INDUCTOR RF-CH-MLD 180NH 10% .105DX.26LG	28480	9100-2250
A3A9A5L14	9100-2249	6		INDUCTOR RF-CH-MLD 150NH 10% .105DX.26LG	28480	9100-2249
A3A9A5MP1	1205-0011	0		HEAT SINK TO-5/TO-39-CS	28480	1205-0011
A3A9A5MP2	1205-0037	0		HEAT SINK TO-18-CS	28480	1205-0037
A3A9A5MP3	1251-3172	7	1	CONNECTOR-SGL CONT SKT .03-IN-BSC-SZ RND	28480	1251-3172
A3A9A5Q1	1854-0247	9		TRANSISTOR NPN SI TO-39 PD=1W FT=800MHZ	28480	1854-0247
	1200-0173	5	3	INSULATOR-XSTR DAP-GL	28480	1200-0173
A3A9A5Q2	1854-0345	8		TRANSISTOR NPN 2N5179 SI TO-72 PD=200MW	04713	2N5179
A3A9A5Q3	1854-0247	9		TRANSISTOR NPN SI TO-39 PD=1W FT=800MHZ	28480	1854-0247
A3A9A5Q4	1855-0254	0	1	TRANSISTOR MOSFET N-CHAN E-MODE	28480	1855-0254
A3A9A5Q5	1853-0015	7		TRANSISTOR PNP SI PD=200MW FT=500MHZ	28480	1853-0015
A3A9A5Q6	1854-0345	8		TRANSISTOR NPN 2N5179 SI TO-72 PD=200MW	04713	2N5179
A3A9A5Q7	1854-0345	8		TRANSISTOR NPN 2N5179 SI TO-72 PD=200MW	04713	2N5179
A3A9A5Q8	1854-0247	9		TRANSISTOR NPN SI TO-39 PD=1W FT=800MHZ	28480	1854-0247
	1200-0173	5		INSULATOR-XSTR DAP-GL	28480	1200-0173
A3A9A5R1	2100-3383	4	1	RESISTOR-TRMR 50 10% C TOP-ADJ 1-TRN	28480	2100-3383
A3A9A5R2	0757-0394	0		RESISTOR 51.1 1% .125W F TC=0+-100	24546	C4-1/8-T0-51R1-F
A3A9A5R3	0698-3440	7		RESISTOR 196 1% .125W F TC=0+-100	24546	C4-1/8-T0-196R-F
A3A9A5R4	0698-0085	0		RESISTOR 2.61K 1% .125W F TC=0+-100	24546	C4-1/8-T0-2611-F
A3A9A5R5	0757-0424	7		RESISTOR 1.1K 1% .125W F TC=0+-100	24546	C4-1/8-T0-1101-F
A3A9A5R6	0757-0280	3		RESISTOR 1K 1% .125W F TC=0+-100	24546	C4-1/8-T0-1001-F
A3A9A5R7	0757-0278	9		RESISTOR 1.78K 1% .125W F TC=0+-100	24546	C4-1/8-T0-1781-F
A3A9A5R8	0757-0796	6	1	RESISTOR 82.5 1% .5W F TC=0+-100	28480	0757-0796
A3A9A5R9	0757-0399	5		RESISTOR 82.5 1% .125W F TC=0+-100	24546	C4-1/8-T0-82R5-F
A3A9A5R10	0698-3457	6	1	RESISTOR 316K 1% .125W F TC=0+-100	28480	0698-3457
A3A9A5R11	0757-0470	3	1	RESISTOR 162K 1% .125W F TC=0+-100	24546	C4-1/8-T0-1623-F
A3A9A5R12	0757-0442	9		RESISTOR 10K 1% .125W F TC=0+-100	24546	C4-1/8-T0-1002-F
A3A9A5R13	0698-7216	3	1	RESISTOR 147 1% .05W F TC=0+-100	24546	C3-1/8-T0-147R-F
A3A9A5R14	0757-0447	4		RESISTOR 16.2K 1% .125W F TC=0+-100	24546	C4-1/8-T0-1622-F
A3A9A5R15	0757-0317	7		RESISTOR 1.33K 1% .125W F TC=0+-100	24546	C4-1/8-T0-1331-F
A3A9A5R16	0757-0398	4	1	RESISTOR 75 1% .125W F TC=0+-100	24546	C4-1/8-T0-75R0-F
A3A9A5R17	0757-0422	5		RESISTOR 909 1% .125W F TC=0+-100	24546	C4-1/8-T0-909R-F
A3A9A5R18	0757-0420	3		RESISTOR 750 1% .125W F TC=0+-100	24546	C4-1/8-T0-751-F
A3A9A5R19	0757-0421	4		RESISTOR 825 1% .125W F TC=0+-100	24546	C4-1/8-T0-825R-F
A3A9A5R20	0698-7224	3		RESISTOR 316 1% .05W F TC=0+-100	24546	C3-1/8-T0-316R-F

See introduction to this section for ordering information
*Indicates factory selected value

Table 6-3. Replaceable Parts

Reference Designation	HP Part Number	C D	Qty	Description	Mfr Code	Mfr Part Number
A3A9A5R21	0698-7212	9		RESISTOR 100 1% .05W F TC=0+-100	24546	C3-1/8-TO-100R-F
A3A9A5R22	0698-7197	9	1	RESISTOR 23.7 1% .05W F TC=0+-100	24546	C3-1/8-TO-23R7-F
A3A9A5R23	0698-0083	8		RESISTOR 1.96K 1% .125W F TC=0+-100	24546	C4-1/8-TO-1961-F
A3A9A5R24	0698-0084	9		RESISTOR 2.15K 1% .125W F TC=0+-100	24546	C4-1/8-TO-2151-F
A3A9A5R25	0698-0082	7	2	RESISTOR 464 1% .125W F TC=0+-100	24546	C4-1/8-TO-4640-F
A3A9A5R26	0757-0280	3		RESISTOR 1K 1% .125W F TC=0+-100	24546	C4-1/8-TO-1001-F
A3A9A5R27	0757-0394	0		RESISTOR 51.1 1% .125W F TC=0+-100	24546	C4-1/8-TO-51R1-F
A3A9A5R28	0698-0082	7		RESISTOR 464 1% .125W F TC=0+-100	24546	C4-1/8-TO-4640-F
A3A9A5R29	0698-7212	9		RESISTOR 100 1% .05W F TC=0+-100	24546	C3-1/8-TO-100R-F
A3A9A5R30	0757-0346	2		RESISTOR 10 1% .125W F TC=0+-100	24546	C4-1/8-TO-10R0-F
A3A9A5R31	0757-0420	3		RESISTOR 750 1% .125W F TC=0+-100	24546	C4-1/8-TO-751-F
A3A9A5R32	0698-3439	4	2	RESISTOR 178 1% .125W F TC=0+-100	24546	C4-1/8-TO-178R-F
A3A9A5R33	0757-0346	2		RESISTOR 10 1% .125W F TC=0+-100	24546	C4-1/8-TO-10R0-F
A3A9A5R34	0757-0280	3		RESISTOR 1K 1% .125W F TC=0+-100	24546	C4-1/8-TO-1001-F
A3A9A5R35	0698-3439	4		RESISTOR 178 1% .125W F TC=0+-100	24546	C4-1/8-TO-178R-F
A3A9A5R36	0757-0394	0		RESISTOR 51.1 1% .125W F TC=0+-100	24546	C4-1/8-TO-51R1-F
A3A9A5R37	0757-0394	0		RESISTOR 51.1 1% .125W F TC=0+-100	24546	C4-1/8-TO-51R1-F
A3A9A5R38	0757-0276	7		RESISTOR 61.9 1% .125W F TC=0+-100	24546	C4-1/8-TO-6192-F
A3A9A5R39	0757-0276	7		RESISTOR 61.9 1% .125W F TC=0+-100	24546	C4-1/8-TO-6192-F
A3A9A5R40	0757-0394	0		RESISTOR 51.1 1% .125W F TC=0+-100	24546	C4-1/8-TO-51R1-F
A3A9A5R41	0698-7196	8	1	RESISTOR 21.5 1% .05W F TC=0+-100	24546	C3-1/8-TO-21R5-F
A3A9A6	0955-0090	3	1	ATTENUATOR ASSEMBLY- 15DB	28480	0955-0090
A3A9A7	9135-0040	4	1	6.2 GHZ LOW PASS FILTER ASSEMBLY	28480	9135-0040
A3A10	86701-60011	3	1	MOTHERBOARD ASSEMBLY	28480	86701-60011
A3A10CR1	1901-0159	3		DIODE-PWR RECT 400V 750MA DO-41	28480	1901-0159
A3A10CR2	1901-0050	3		DIODE-SWITCHING 80V 200MA 2NS DO-35	28480	1901-0050
A3A10CR3	1990-0517	4	1	LED-LAMP LUM-INT=3MCD IF=20MA-MAX BVR=5V	28480	5082-4655
A3A10J1				NSR, PART OF A3W11		
A3A10J2	1251-3905	4	1	CONNECTOR 20-PIN M RECTANGULAR	28480	1251-3905
A3A10J3	86701-60069	1	1	CONNECTOR ASSEMBLY, 5-PIN	28480	86701-60069
A3A10J4	1251-0555	4	1	CONNECTOR-PC EDGE 30-CONT/ROW 2-ROWS	28480	1251-0555
A3A10K1	0490-0618	5	1	RELAY 2C 24VDC-COIL 5A 115VAC	28480	0490-0618
	0380-0667	1	1	STANDOFF-HEX .312-IN-LG 6-32THD	28480	0380-0667
A3A10MP2	0380-0076	6	1	SPACER-RVT-ON .5-IN-LG .152-IN-ID	00000	ORDER BY DESCRIPTION
A3A10MP3	0380-0659	1	1	SPACER-RVT-ON .375-IN-LG .152-IN-ID	00000	ORDER BY DESCRIPTION
A3A10MP4	0380-0884	4	1	STANDOFF-RVT-ON .156-IN-LG 4-40THD	00000	ORDER BY DESCRIPTION
A3A10MP5	0590-0526	6		THREADED INSERT-NUT 4-40 .065-IN-LG SST	28480	0590-0526
A3A10MP6	1251-2313	6		CONNECTOR-SGL CONT SKT .04-IN-BSC-SZ RND	28480	1251-2313
A3A10R1	0757-0421	4		RESISTOR 825 1% .125W F TC=0+-100	24546	C4-1/8-TO-825R-F
A3A10R2	0687-3321	0	1	RESISTOR 3.3K 10% .5W CC TC=0+647	01121	EB3321
A3A10R3	0683-7515	4	1	RESISTOR 750 5% .25W FC TC=-400/+600	01121	CB7515
A3A10R4	0686-7525	2	1	RESISTOR 7.5K 5% .5W CC TC=0+647	01121	EB7525
A3A10R5	0683-2225	3	1	RESISTOR 2.2K 5% .25W FC TC=-400/+700	01121	CB2225
A3A10XA3A2	1251-2026	8	4	CONNECTOR-PC EDGE 18-CONT/ROW 2-ROWS	28480	1251-2026
A3A10XA3A3	1251-2026	8		CONNECTOR-PC EDGE 18-CONT/ROW 2-ROWS	28480	1251-2026
A3A10XA3A4	1251-2026	8		CONNECTOR-PC EDGE 18-CONT/ROW 2-ROWS	28480	1251-2026
A3A10XA3A5	1251-2026	8		CONNECTOR-PC EDGE 18-CONT/ROW 2-ROWS	28480	1251-2026
A3A10XA3A6	1251-2035	9		CONNECTOR-PC EDGE 15-CONT/ROW 2-ROWS	28480	1251-2035
A3A10XA3A7	1251-2035	9		CONNECTOR-PC EDGE 15-CONT/ROW 2-ROWS	28480	1251-2035
A3A11	86701-60070	4	1	POWER LINE MODULE (PRIMARY POWER, FUSE LISTED AS A3F1)	28480	86701-60070

See introduction to this section for ordering information
*Indicates factory selected value

Table 6-3. Replaceable Parts

Reference Designation	HP Part Number	C D	Qty	Description	Mfr Code	Mfr Part Number
A3AT1	86701-60066	8	2	TERMINATION- 50 OHM	28480	86701-60066
A3AT2	86701-60066	8		TERMINATION- 50 OHM	28480	86701-60066
A3B1	3160-0296	9	1	FAN-SKL 72-CFM 115V 50/60-HZ 3.875-OD (EXCEPT OPTION 003)	28480	3160-0296
A3B1	3160-0298	1	1	FAN-SKL 72-CFM 115V 50/60/400-HZ (OPTION 003 ONLY)	28480	3160-0298
A3C1	0180-0452	8	1	CAPACITOR-FXD .013F+75-10% 25VDC AL	28480	0180-0452
A3C2	0180-0454	0	1	CAPACITOR-FXD 4200UF+75-10% 75VDC AL	28480	0180-0454
A3C3	0180-0453	9	1	CAPACITOR-FXD 8700UF+75-10% 40VDC AL	28480	0180-0453
A3C4	0180-2798	9	1	CAPACITOR-FXD .03F+100-10% 20VDC AL	28480	0180-2798
A3C5	0170-0073	8	1	CAPACITOR-FXD 1UF +-10% 600VDC POLYE	28480	0170-0073
A3C6	0160-4065	5	1	CAPACITOR-FXD .1UF +-20% 250VAC(RMS)	28480	0160-4065
A3F1	2110-0003	0	1	FUSE 3A 250V NTD 1.25X.25 UL (FOR 100/120V OPERATION)	75915	312003
A3F1	2110-0043	8	1	FUSE 1.5A 250V NTD 1.25X.25 UL (FOR 220/240V OPERATION)	28480	2110-0043
A3J1				NSR, PART OF A3W11		
A3J2				NSR, PART OF A3W10		
A3J3				NSR, PART OF A3W10		
A3J4				NOT ASSIGNED		
A3J5				NOT ASSIGNED		
A3J6				RF OUTPUT CONNECTOR NSR, PART OF A1W7 (OPT. 005 ONLY) OR A1W8 (OPT. 004 ONLY)		
A3J7	1250-0870	4	4	CONNECTOR-RF BNC FEM SGL-HOLE-RR 50-OHM (10 MHZ OUTPUT)	28480	1250-0870
A3J8	1250-0870	4		CONNECTOR-RF BNC FEM SGL-HOLE-RR 50-OHM (100 MHZ OUTPUT)	28480	1250-0870
A3J9	1250-0870	4		CONNECTOR-RF BNC FEM SGL-HOLE-RR 50-OHM (FREQ. STD. INT.)	28480	1250-0870
A3J10	1250-0870	4		CONNECTOR-RF BNC FEM SGL-HOLE-RR 50-OHM (FREQ. STD. EXT.)	28480	1250-0870
A3MP1	0360-0268	6	1	TERMINAL-SLDR LUG LK-MTG FOR-#6-SCR	28480	0360-0268
A3MP2	0400-0001	1	1	GROMMET-RND .562-IN-ID .75-IN-GRV-OD	28480	0400-0001
A3MP3	0400-0082	8	1	GROMMET-CHAN NCH .09-IN-GRV-WD	28480	0400-0082
A3MP4	0510-0198	0	1	NUT-HEX-DBL-CHAM 0-80-THD .047-IN-THK	00000	ORDER BY DESCRIPTION
A3MP5	0515-0095	6	1	SCREW-THUMB M3.5 X 0.6 6.35MM-LG	00000	ORDER BY DESCRIPTION
A3MP6	0520-0166	3	1	SCREW-MACH 2-56 .375-IN-LG 82 DEG	00000	ORDER BY DESCRIPTION
A3MP7	0590-0012	5	1	NUT-KNRLD-R 15/32-32-THD .062-IN-THK	00000	ORDER BY DESCRIPTION
A3MP8	0590-0106	8	1	NUT-HEX-PLSTC LKG 2-56-THD .143-IN-THK	00000	ORDER BY DESCRIPTION
A3MP9	0890-0092	7	1	TUBING-FLEX .102-ID TFE .016-WALL	00000	ORDER BY DESCRIPTION
A3MP10	1200-0043	8	1	INSULATOR-XSTR ALUMINUM	28480	1200-0043
A3MP11	1200-0147	3	1	INSULATOR-FLG-BSHG NYLON	28480	1200-0147
A3MP12	1400-0510	8	1	CLAMP-CABLE .15-DIA .62-WD NYL	28480	1400-0510
A3MP13	1400-0618	7	1	CABLE CLAMP-HFCL .125-DIA .5-WD	28480	1400-0618
A3MP14	1400-0619	8	1	CABLE CLAMP-HFCL .312-DIA .5-WD	28480	1400-0619
A3MP15	1400-0673	4	1	CLAMP-CABLE 2-DIA .5-WD SST	28480	1400-0673
A3MP16	1520-0065	2	1	SHOCK MOUNT .5-EFF-HGT 6-LB-LOAD-CAP	28480	1520-0065
A3MP17	1520-0094	7	1	SHOCK MOUNT .45-EFF-HGT 1-LB-LOAD-CAP	28480	1520-0094
A3MP18	2190-0004	9	1	WASHER-LK INTL T NO. 4 .115-IN-ID	28480	2190-0004
A3MP19	2190-0007	2	1	WASHER-LK INTL T NO. 6 .141-IN-ID	28480	2190-0007
A3MP20	2190-0011	8	1	WASHER-LK INTL T NO. 10 .195-IN-ID	28480	2190-0011
A3MP21	2190-0017	4	1	WASHER-LK HLCL NO. 8 .168-IN-ID	28480	2190-0017
A3MP22	2190-0018	5	1	WASHER-LK HLCL NO. 6 .141-IN-ID	28480	2190-0018
A3MP23	2190-0019	6	1	WASHER-LK HLCL NO. 4 .115-IN-ID	28480	2190-0019
A3MP24	2190-0049	2	1	WASHER-LK HLCL NO. 0 .065-IN-ID	28480	2190-0049
A3MP25	2190-0102	8	1	WASHER-LK INTL T 15/32 IN .472-IN-ID	28480	2190-0102
A3MP26	2200-0103	2	1	SCREW-MACH 4-40 .25-IN-LG PAN-HD-POZI	00000	ORDER BY DESCRIPTION
A3MP27	2200-0105	4	1	SCREW-MACH 4-40 .312-IN-LG PAN-HD-POZI	00000	ORDER BY DESCRIPTION
A3MP28	2200-0111	2	1	SCREW-MACH 4-40 .5-IN-LG PAN-HD-POZI	00000	ORDER BY DESCRIPTION
A3MP29	2200-0141	8	1	SCREW-MACH 4-40 .312-IN-LG PAN-HD-POZI	00000	ORDER BY DESCRIPTION
A3MP30	2200-0151	0	1	SCREW-MACH 4-40 .75-IN-LG PAN-HD-POZI	00000	ORDER BY DESCRIPTION
A3MP31	2200-0153	2	1	SCREW-MACH 4-40 .875-IN-LG PAN-HD-POZI	00000	ORDER BY DESCRIPTION
A3MP32	2360-0115	4	1	SCREW-MACH 6-32 .312-IN-LG PAN-HD-POZI	00000	ORDER BY DESCRIPTION
A3MP33	2360-0117	6	1	SCREW-MACH 6-32 .375-IN-LG PAN-HD-POZI	00000	ORDER BY DESCRIPTION
A3MP34	2360-0119	8	1	SCREW-MACH 6-32 .438-IN-LG PAN-HD-POZI	00000	ORDER BY DESCRIPTION
A3MP35	2360-0197	2	1	SCREW-MACH 6-32 .375-IN-LG PAN-HD-POZI	00000	ORDER BY DESCRIPTION
A3MP36	2360-0219	9	1	SCREW-MACH 6-32 1.375-IN-LG PAN-HD-POZI	00000	ORDER BY DESCRIPTION
A3MP37	2360-0333	8	1	SCREW-MACH 6-32 .25-IN-LG 100 DEG	28480	2360-0333
A3MP38	2510-0192	6	1	SCREW-MACH 8-32 .25-IN-LG 100 DEG	00000	ORDER BY DESCRIPTION
A3MP39	2510-0195	9	1	SCREW-MACH 8-32 .375-IN-LG 100 DEG	28480	2510-0195
A3MP40	2580-0002	4	1	NUT-HEX-DBL-CHAM 8-32-THD .085-IN-THK	00000	ORDER BY DESCRIPTION

See introduction to this section for ordering information
*Indicates factory selected value

Table 6-3. Replaceable Parts

Reference Designation	HP Part Number	C D	Qty	Description	Mfr Code	Mfr Part Number
A3MP41	2680-0129	8	1	SCREW-MACH 10-32 .312-IN-LG PAN-HD-POZI	00000	ORDER BY DESCRIPTION
A3MP42	2950-0035	8	1	NUT-HEX-DBL-CHAM 15/32-32-THD	00000	ORDER BY DESCRIPTION
A3MP43	2950-0051	8	1	NUT-HEX-DBL-CHAM 1/4-28-THD .094-IN-THK	00000	ORDER BY DESCRIPTION
A3MP44	3030-0422	8	1	SCREW-SKT HD CAP 0-80 .188-IN-LG SST-302	00000	ORDER BY DESCRIPTION
A3MP45	3050-0105	6	1	WASHER-FL MTLC NO. 4 .125-IN-ID	28480	3050-0105
A3MP46	3050-0227	3	1	WASHER-FL MTLC NO. 6 .149-IN-ID	28480	3050-0227
A3MP47	7120-4296	7	1	LABEL-WARNING .688-IN-WD 1.5-IN-LG AL	28480	7120-4296
A3MP48	7120-4477	6	1	LABEL-WARNING .45-IN-WD 7.5-IN-LG AL	28480	7120-4477
A3MP49	7120-4439	0	1	LABEL-LINE MODULE	28480	7120-4439
A3MP50	5021-3208	7	1	HOUSING-REFERENCE BLOCK	28480	5021-3208
A3MP51	5040-0170	6	1	GUIDE-PLUG IN P.C. BOARD	28480	5040-0170
A3MP52	86701-00002	6	1	CHASSIS CONTROL	28480	86701-00002
A3MP53	86701-00003	7	1	CHASSIS-RF MOD	28480	86701-00003
A3MP54	86701-00004	8	1	SUPPORT-P.C. GUIDE	28480	86701-00004
A3MP55	86701-00007	1	1	AIR FILTER	28480	86701-00007
A3MP56	86701-00016	2	1	SUPPORT-CAPACITOR	28480	86701-00016
A3MP57	86701-00017	3	1	DISK- FAN SHIELD	28480	86701-00017
A3MP58	86701-00019	5	1	INSULATOR	28480	86701-00019
A3MP59	86701-00057	1	1	DIVIDER CENTER, 21"	28480	86701-00057
A3MP60	86701-00022	0	1	COVER-GUARD	28480	86701-00022
A3MP61	86701-00024	2	1	SCOOP-AIR	28480	86701-00024
A3MP62	86701-00027	5	1	PANEL (REAR)	28480	86701-00027
A3MP63	86701-00028	6	1	SPRING-FLAT	28480	86701-00028
A3MP64	86701-00029	7	1	BAFFLE-AIR (TOP)	28480	86701-00029
A3MP65	86701-00030	0	1	BAFFLE-AIR (BOTTOM)	28480	86701-00030
A3MP66	86701-00038	8	1	STRUT ASSEMBLY (LEFT)	28480	86701-00038
A3MP67	86701-00039	9	1	STRUT ASSEMBLY (RIGHT)	28480	86701-00039
A3MP68	86701-00042	4	1	SUPPORT-MOUNT (BOTTOM)	28480	86701-00042
A3MP69	86701-00043	5	1	SUPPORT-MOUNT (TOP)	28480	86701-00043
A3MP70	86701-00044	6	1	SNUBBER	28480	86701-00044
A3MP71	86701-20002	8	1	COWLING FAN	28480	86701-20002
A3MP72	86701-20003	9	1	GUIDE-PIN	28480	86701-20003
A3MP73	86701-40004	2	1	HEAT SINK	28480	86701-40004
A3MP74	86701-20005	1	1	GUIDE-P.C. BOARD (REAR)	28480	86701-20005
A3MP75	86701-20006	2	1	GUIDE-P.C. BOARD (FRONT)	28480	86701-20006
A3MP76	86701-20007	3	1	FRAME-MOD (REAR)	28480	86701-20007
A3Q1	1854-0618	8	2	TRANSISTOR NPN SI DARL TO-3 PD=150W	04713	MJ3000
A3Q2	1854-0294	6	1	TRANSISTOR NPN SI TO-3 PD=115W FT=500KHZ	28480	1854-0294
A3Q3	1854-0618	8		TRANSISTOR NPN SI DARL TO-3 PD=150W	04713	MJ3000
A3Q4	1854-0679	1	1	TRANSISTOR NPN 2N5885 SI TO-3 PD=200W	04713	2N5885
A3S1	3101-0070	3	1	SWITCH-SL DPDT MINTR .5A 125VAC/DC (FREQ. STD. INT/EXT SWITCH)	28480	3101-0070
A3T1	9100-2653	6	1	TRANSFORMER	28480	9100-2653
A3W1	86701-60046	4	1	CABLE ASSY-FM INPUT (BROWN)	28480	86701-60046
A3W2	86701-60007	7	1	CABLE ASSY-FREQ. STD. OUTPUT(GRAY/VIO)	28480	86701-60007
A3W3	86701-60063	5	1	CABLE ASSY-FREQ. REF. (GRAY)	28480	86701-60063
A3W4	86701-60039	5	1	CABLE ASSY-YTM TUNE (YELLOW)	28480	86701-60039
A3W5	86701-60005	5	1	CABLE ASSY-10 MHZ OUTPUT (GRAY/BLUE)	28480	86701-60005
A3W6	86701-60049	7	1	CABLE ASSY-10 MHZ OUTPUT (BLUE)	28480	86701-60049
A3W7	86701-60004	4	1	CABLE ASSY-100 MHZ OUTPUT (GRAY/GREEN)	28480	86701-60004
A3W8	86701-60053	3	1	CABLE ASSY-M/N OUTPUT (WHITE/ORANGE)	28480	86701-60053
A3W9				NOT ASSIGNED		
A3W10	86701-60064	6	1	CABLE ASSY-A1 TO A2 INTERCONNECT (INCLUDES A3J2 AND A3J3)	28480	86701-60064
A3W11	86701-60050	0	1	CABLE ASSY (A1 INTERCONNECT) (INCLUDES A3J1 AND A3A10J1)	28480	86701-60050
A3W12				NOT ASSIGNED		
A3W13	86701-60006	6	1	CABLE ASSY-FREQ. STD. INPUT (GRAY/BLACK)	28480	86701-60006
A3W14	86701-60056	6	1	CABLE ASSY-20/30 MHZ OUTPUT (GREEN)	28480	86701-60056
A3W15	86701-60033	9	1	CABLE ASSY-FM TUNE (VIOLET)	28480	86701-60033
A3W16	86701-60055	5	1	CABLE ASSY-YTO TUNE (GRAY)	28480	86701-60055
A3W17	86701-60054	4	1	CABLE ASSY-INTEGRATED FM OUTPUT (WHITE)	28480	86701-60054

See introduction to this section for ordering information
*Indicates factory selected value

Table 6-3. Replaceable Parts

Reference Designation	HP Part Number	C D	Qty	Description	Mfr Code	Mfr Part Number
A4	08673-60016	9	1	PANEL ASSEMBLY	28480	08673-60016
A4A1	08673-60001	2		FRONT PANEL BOARD ASSEMBLY	28480	08673-60001
A4A1DS1-A4A1DS14				NOT ASSIGNED		
A4A1DS15	1990-0665	3	23	LED-LAMP LUM-INT=1MCD IF=20MA-MAX BVR=5V	28480	1990-0665
A4A1DS16	1990-0665	3		LED-LAMP LUM-INT=1MCD IF=20MA-MAX BVR=5V	28480	1990-0665
A4A1DS17	1990-0665	3		LED-LAMP LUM-INT=1MCD IF=20MA-MAX BVR=5V	28480	1990-0665
A4A1DS18	1990-0665	3		LED-LAMP LUM-INT=1MCD IF=20MA-MAX BVR=5V	28480	1990-0665
A4A1DS19	1990-0665	3		LED-LAMP LUM-INT=1MCD IF=20MA-MAX BVR=5V	28480	1990-0665
A4A1DS20	1990-0665	3		LED-LAMP LUM-INT=1MCD IF=20MA-MAX BVR=5V	28480	1990-0665
A4A1DS21	1990-0665	3		LED-LAMP LUM-INT=1MCD IF=20MA-MAX BVR=5V	28480	1990-0665
A4A1DS22	1990-0665	3		LED-LAMP LUM-INT=1MCD IF=20MA-MAX BVR=5V	28480	1990-0665
A4A1DS23	1990-0665	3		LED-LAMP LUM-INT=1MCD IF=20MA-MAX BVR=5V	28480	1990-0665
A4A1DS24	1990-0665	3		LED-LAMP LUM-INT=1MCD IF=20MA-MAX BVR=5V	28480	1990-0665
A4A1DS25	1990-0665	3		LED-LAMP LUM-INT=1MCD IF=20MA-MAX BVR=5V	28480	1990-0665
A4A1DS26	1990-0665	3		LED-LAMP LUM-INT=1MCD IF=20MA-MAX BVR=5V	28480	1990-0665
A4A1DS27	1990-0665	3		LED-LAMP LUM-INT=1MCD IF=20MA-MAX BVR=5V	28480	1990-0665
A4A1DS28	1990-0665	3		LED-LAMP LUM-INT=1MCD IF=20MA-MAX BVR=5V	28480	1990-0665
A4A1DS29	1990-0665	3		LED-LAMP LUM-INT=1MCD IF=20MA-MAX BVR=5V	28480	1990-0665
A4A1DS30	1990-0665	3		LED-LAMP LUM-INT=1MCD IF=20MA-MAX BVR=5V	28480	1990-0665
A4A1DS31	1990-0665	3		LED-LAMP LUM-INT=1MCD IF=20MA-MAX BVR=5V	28480	1990-0665
A4A1DS32	1990-0665	3		LED-LAMP LUM-INT=1MCD IF=20MA-MAX BVR=5V	28480	1990-0665
A4A1DS33	1990-0665	3		LED-LAMP LUM-INT=1MCD IF=20MA-MAX BVR=5V	28480	1990-0665
A4A1DS34	1990-0665	3		LED-LAMP LUM-INT=1MCD IF=20MA-MAX BVR=5V	28480	1990-0665
A4A1DS35	1990-0665	3		LED-LAMP LUM-INT=1MCD IF=20MA-MAX BVR=5V	28480	1990-0665
A4A1DS36	1990-0665	3		LED-LAMP LUM-INT=1MCD IF=20MA-MAX BVR=5V	28480	1990-0665
A4A1DS37	1990-0665	3		LED-LAMP LUM-INT=1MCD IF=20MA-MAX BVR=5V	28480	1990-0665
A4A1DS38	1990-0486	6	4	LED-LAMP LUM-INT=1MCD IF=20MA-MAX BVR=5V	28480	5082-4684
A4A1DS39	1990-0486	6		LED-LAMP LUM-INT=1MCD IF=20MA-MAX BVR=5V	28480	5082-4684
A4A1DS40	1990-0486	6		LED-LAMP LUM-INT=1MCD IF=20MA-MAX BVR=5V	28480	5082-4684
A4A1DS41	1990-0486	6		LED-LAMP LUM-INT=1MCD IF=20MA-MAX BVR=5V	28480	5082-4684
A4A1J1	1251-3119	2	1	CONNECTOR 20-PIN M RECTANGULAR	28480	1251-3119
A4A1J2	1251-4737	2	1	CONNECTOR 50-PIN M RECTANGULAR	28480	1251-4737
A4A1J3	1251-5721	6	1	CONNECTOR 40-PIN M POST TYPE	28480	1251-5721
A4A1MP1	0361-0457	7	7	EYELET-RLD-FLG .065-OD .125-LG .008-THK	07707	S-5994
A4A1MP2	1200-0645	6	2	SOCKET-STRP 12-CONT DIP-SLDR	28480	1200-0645
A4A1MP3	1200-0874	3	4	SOCKET-STRP 22-CONT SIP DIP-SLDR	28480	1200-0874
A4A1MP4	1251-0600	0	2	CONNECTOR-SGL CONT PIN 1.14-MM-BSC-SZ SQ	28480	1251-0600
A4A1MP5	86290-00034	6	7	LAMP-CONTACT	28480	86290-00034
A4A1R1	0757-0401	0	1	RESISTOR 100 1% .125W F TC=0+-100	24546	C4-1/8-T0-101-F
A4A1R2	0757-0417	8	1	RESISTOR 562 1% .125W F TC=0+-100	24546	C4-1/8-T0-562R-F
A4A1S1	5060-9436	7	58	PUSHBUTTON SWITCH P.C. MOUNT	28480	5060-9436
	5041-0819	2	1	KEY CAP-HALF, SKY GRAY "0"	28480	5041-0819
A4A1S2	5060-9436	7		PUSHBUTTON SWITCH P.C. MOUNT	28480	5060-9436
	5041-0811	4	1	KEY CAP-HALF, SKY GRAY "1"	28480	5041-0811
A4A1S3	5060-9436	7		PUSHBUTTON SWITCH P.C. MOUNT	28480	5060-9436
	5041-0812	5	1	KEY CAP-HALF, SKY GRAY "2"	28480	5041-0812
A4A1S4	5060-9436	7		PUSHBUTTON SWITCH P.C. MOUNT	28480	5060-9436
	5041-0813	6	1	KEY CAP-HALF, SKY GRAY "3"	28480	5041-0813
A4A1S5	5060-9436	7		PUSHBUTTON SWITCH P.C. MOUNT	28480	5060-9436
	5041-0814	7	1	KEY CAP-HALF, SKY GRAY "4"	28480	5041-0814
A4A1S6	5060-9436	7		PUSHBUTTON SWITCH P.C. MOUNT	28480	5060-9436
	5041-0815	8	1	KEY CAP-HALF, SKY GRAY "5"	28480	5041-0815
A4A1S7	5060-9436	7		PUSHBUTTON SWITCH P.C. MOUNT	28480	5060-9436
	5041-0816	9	2	KEY CAP-HALF, SKY GRAY "6"	28480	5041-0816
A4A1S8	5060-9436	7		PUSHBUTTON SWITCH P.C. MOUNT	28480	5060-9436
	5041-0817	0	1	KEY CAP-HALF, SKY GRAY "7"	28480	5041-0817
A4A1S9	5060-9436	7		PUSHBUTTON SWITCH P.C. MOUNT	28480	5060-9436
	5041-0818	1	1	KEY CAP-HALF, SKY GRAY "8"	28480	5041-0818
A4A1S10	5060-9436	7		PUSHBUTTON SWITCH P.C. MOUNT	28480	5060-9436
	5041-0816	9		KEY CAP-HALF, SKY GRAY "6"	28480	5041-0816
A4A1S11	5060-9436	7		PUSHBUTTON SWITCH P.C. MOUNT	28480	5060-9436
	5041-0122	0	8	KEY CAP-QUARTER, JADE GRAY (BLANK)	28480	5041-0122
A4A1S12	5060-9436	7		PUSHBUTTON SWITCH P.C. MOUNT	28480	5060-9436
	5041-0128	6	4	KEY CAP-HALF, JADE GRAY (ILLUMINATED)	28480	5041-0128
A4A1S13	5060-9436	7		PUSHBUTTON SWITCH P.C. MOUNT	28480	5060-9436
	5041-0122	0		KEY CAP-QUARTER, JADE GRAY (BLANK)	28480	5041-0122
A4A1S14	5060-9436	7		PUSHBUTTON SWITCH P.C. MOUNT	28480	5060-9436
	5041-0123	1	3	KEY CAP-HALF, JADE GRAY (BLANK)	28480	5041-0123
A4A1S15	5060-9436	7		PUSHBUTTON SWITCH P.C. MOUNT	28480	5060-9436
	5041-0128	6		KEY CAP-HALF, JADE GRAY (ILLUMINATED)	28480	5041-0128
A4A1S16	5060-9436	7		PUSHBUTTON SWITCH P.C. MOUNT	28480	5060-9436
	5041-0123	1		KEY CAP-HALF, JADE GRAY (BLANK)	28480	5041-0123
A4A1S17	5060-9436	7		PUSHBUTTON SWITCH P.C. MOUNT	28480	5060-9436
	5041-0122	0		KEY CAP-QUARTER, JADE GRAY (BLANK)	28480	5041-0122
A4A1S18	5060-9436	7		PUSHBUTTON SWITCH P.C. MOUNT	28480	5060-9436
	5041-1829	6	4	KEY CAP-QUARTER, SHORT DB "^ 1"	28480	5041-1829

See introduction to this section for ordering information
*Indicates factory selected value

Table 6-3. Replaceable Parts

Reference Designation	HP Part Number	C D	Qty	Description	Mfr Code	Mfr Part Number
A4A1S19	5060-9436	7		PUSHBUTTON SWITCH P.C. MOUNT	28480	5060-9436
	5041-1829	6		KEY CAP-QUARTER, SHORT DB "^ 1"	28480	5041-1829
A4A1S20	5060-9436	7		PUSHBUTTON SWITCH P.C. MOUNT	28480	5060-9436
	5041-0285	6	14	KEY CAP-QUARTER, LITE GRAY (ILLUMINATED)	28480	5041-0285
A4A1S21	5060-9436	7		PUSHBUTTON SWITCH P.C. MOUNT	28480	5060-9436
	5041-1919	5	1	KEY CAP-QUARTER "STEPS ms"	28480	5041-1919
A4A1S22	5060-9436	7		PUSHBUTTON SWITCH P.C. MOUNT	28480	5060-9436
	5041-1920	8	1	KEY CAP-QUARTER "(-----"	28480	5041-1920
A4A1S23	5060-9436	7		PUSHBUTTON SWITCH P.C. MOUNT	28480	5060-9436
	5041-0808	9	1	KEY CAP-HALF, SKY GRAY "DECIMAL"	28480	5041-0808
A4A1S24	5060-9436	7		PUSHBUTTON SWITCH P.C. MOUNT	28480	5060-9436
	5041-0127	5	1	KEY CAP-QUARTER, SHORT DB (ILLUMINATED)	28480	5041-0127
A4A1S25	5060-9436	7		PUSHBUTTON SWITCH P.C. MOUNT	28480	5060-9436
	5041-0128	6		KEY CAP-HALF, JADE GRAY (ILLUMINATED)	28480	5041-0128
A4A1S26	5060-9436	7		PUSHBUTTON SWITCH P.C. MOUNT	28480	5060-9436
	5041-1829	6		KEY CAP-QUARTER, SHORT DB "^ 1"	28480	5041-1829
	5041-2797	9	1	KEY CAP-QUARTER, SHORT "+10dBm" (OPTION 001 AND 005 ONLY)	28480	5041-2797
A4A1S27	5060-9436	7		PUSHBUTTON SWITCH P.C. MOUNT	28480	5060-9436
	5041-0285	6		KEY CAP-QUARTER, LITE GRAY (ILLUMINATED)	28480	5041-0285
A4A1S28	5060-9436	7		PUSHBUTTON SWITCH P.C. MOUNT	28480	5060-9436
	5041-0285	6		KEY CAP-QUARTER, LITE GRAY (ILLUMINATED)	28480	5041-0285
A4A1S29	5060-9436	7		PUSHBUTTON SWITCH P.C. MOUNT	28480	5060-9436
	5041-1829	6		KEY CAP-QUARTER, SHORT DB "^ 1"	28480	5041-1829
	5041-2796	8	1	KEY CAP-QUARTER, SHORT "+0dBm" (OPTION 001 AND 005 ONLY)	28480	5041-2796
A4A1S30	5060-9436	7		PUSHBUTTON SWITCH P.C. MOUNT	28480	5060-9436
	5041-0285	6		KEY CAP-QUARTER, LITE GRAY (ILLUMINATED)	28480	5041-0285
A4A1S31	5060-9436	7		PUSHBUTTON SWITCH P.C. MOUNT	28480	5060-9436
	5041-0122	0		KEY CAP-QUARTER, JADE GRAY (BLANK)	28480	5041-0122
A4A1S32	5060-9436	7		PUSHBUTTON SWITCH P.C. MOUNT	28480	5060-9436
	5041-0122	0		KEY CAP-QUARTER, JADE GRAY (BLANK)	28480	5041-0122
A4A1S33	5060-9436	7		PUSHBUTTON SWITCH P.C. MOUNT	28480	5060-9436
	5041-0285	6		KEY CAP-QUARTER, LITE GRAY (ILLUMINATED)	28480	5041-0285
A4A1S34	5060-9436	7		PUSHBUTTON SWITCH P.C. MOUNT	28480	5060-9436
	5041-1827	4	1	KEY CAP-QUARTER, SHORT DB "FREQUENCY"	28480	5041-1827
A4A1S35	5060-9436	7		PUSHBUTTON SWITCH P.C. MOUNT	28480	5060-9436
	5041-1828	5	1	KEY CAP-QUARTER, SHORT DB "FREQ INCR"	28480	5041-1828
A4A1S36	5060-9436	7		PUSHBUTTON SWITCH P.C. MOUNT	28480	5060-9436
	5041-0285	6		KEY CAP-QUARTER, LITE GRAY (ILLUMINATED)	28480	5041-0285
A4A1S37	5060-9436	7		PUSHBUTTON SWITCH P.C. MOUNT	28480	5060-9436
	5041-1917	3	1	KEY CAP-QUARTER "STO"	28480	5041-1917
A4A1S38	5060-9436	7		PUSHBUTTON SWITCH P.C. MOUNT	28480	5060-9436
	5041-1918	4	1	KEY CAP-QUARTER "RCL"	28480	5041-1918
A4A1S39	5060-9436	7		PUSHBUTTON SWITCH P.C. MOUNT	28480	5060-9436
	5041-0122	0		KEY CAP-QUARTER, JADE GRAY (BLANK)	28480	5041-0122
A4A1S40	5060-9436	7		PUSHBUTTON SWITCH P.C. MOUNT	28480	5060-9436
	5041-0384	6	4	KEY CAP-QUARTER, SKY GRAY (ILLUMINATED)	28480	5041-0384
A4A1S41	5060-9436	7		PUSHBUTTON SWITCH P.C. MOUNT	28480	5060-9436
	5041-0384	6		KEY CAP-QUARTER, SKY GRAY (ILLUMINATED)	28480	5041-0384
A4A1S42	5060-9436	7		PUSHBUTTON SWITCH P.C. MOUNT	28480	5060-9436
	5041-0123	1		KEY CAP-HALF, JADE GRAY (BLANK)	28480	5041-0123
A4A1S43	5060-9436	7		PUSHBUTTON SWITCH P.C. MOUNT	28480	5060-9436
	5041-0384	6		KEY CAP-QUARTER, SKY GRAY (ILLUMINATED)	28480	5041-0384
A4A1S44	5060-9436	7		PUSHBUTTON SWITCH P.C. MOUNT	28480	5060-9436
	5041-0122	0		KEY CAP-QUARTER, JADE GRAY (BLANK)	28480	5041-0122
A4A1S45	5060-9436	7		PUSHBUTTON SWITCH P.C. MOUNT	28480	5060-9436
	5041-0384	6		KEY CAP-QUARTER, SKY GRAY (ILLUMINATED)	28480	5041-0384
A4A1S46	5060-9436	7		PUSHBUTTON SWITCH P.C. MOUNT	28480	5060-9436
	5041-0285	6		KEY CAP-QUARTER, LITE GRAY (ILLUMINATED)	28480	5041-0285
A4A1S47	5060-9436	7		PUSHBUTTON SWITCH P.C. MOUNT	28480	5060-9436
	5041-0285	6		KEY CAP-QUARTER, LITE GRAY (ILLUMINATED)	28480	5041-0285
A4A1S48	5060-9436	7		PUSHBUTTON SWITCH P.C. MOUNT	28480	5060-9436
	5041-0285	6		KEY CAP-QUARTER, LITE GRAY (ILLUMINATED)	28480	5041-0285
A4A1S49	5060-9436	7		PUSHBUTTON SWITCH P.C. MOUNT	28480	5060-9436
	5041-0285	6		KEY CAP-QUARTER, LITE GRAY (ILLUMINATED)	28480	5041-0285
A4A1S50	5060-9436	7		PUSHBUTTON SWITCH P.C. MOUNT	28480	5060-9436
	5041-0285	6		KEY CAP-QUARTER, LITE GRAY (ILLUMINATED)	28480	5041-0285
A4A1S51	5060-9436	7		PUSHBUTTON SWITCH P.C. MOUNT	28480	5060-9436
	5041-0285	6		KEY CAP-QUARTER, LITE GRAY (ILLUMINATED)	28480	5041-0285
A4A1S52	5060-9436	7		PUSHBUTTON SWITCH P.C. MOUNT	28480	5060-9436
	5041-0285	6		KEY CAP-QUARTER, LITE GRAY (ILLUMINATED)	28480	5041-0285
A4A1S53	5060-9436	7		PUSHBUTTON SWITCH P.C. MOUNT	28480	5060-9436
	5041-0285	6		KEY CAP-QUARTER, LITE GRAY (ILLUMINATED)	28480	5041-0285
A4A1S54	5060-9436	7		PUSHBUTTON SWITCH P.C. MOUNT	28480	5060-9436
	5041-0128	6		KEY CAP-HALF, JADE GRAY (ILLUMINATED)	28480	5041-0128
A4A1S55	5060-9436	7		PUSHBUTTON SWITCH P.C. MOUNT	28480	5060-9436
	5041-0122	0		KEY CAP-QUARTER, JADE GRAY (BLANK)	28480	5041-0122
A4A1S56	5060-9436	7		PUSHBUTTON SWITCH P.C. MOUNT	28480	5060-9436
	5041-1921	9	2	KEY CAP-QUARTER "GHZ"	28480	5041-1921

See introduction to this section for ordering information
*Indicates factory selected value

Table 6-3. Replaceable Parts

Reference Designation	HP Part Number	C D	Qty	Description	Mfr Code	Mfr Part Number
A4A1S57	5060-9436	7		PUSHBUTTON SWITCH P.C. MOUNT	28480	5060-9436
	5041-1921	9		KEY CAP-QUARTER "MHZ"	28480	5041-1921
A4A1S58	5060-9436	7		PUSHBUTTON SWITCH P.C. MOUNT	28480	5060-9436
	5041-1923	1	1	KEY CAP-QUARTER "KHZ"	28480	5041-1923
A4	08673-60016	9	1	PANEL ASSEMBLY	28480	08673-60016
A4A1	08673-60001	2		FRONT PANEL BOARD ASSEMBLY	28480	08673-60001
A4DS1	1990-0821	3	1	DISPLAY (+-1)	28480	1990-0821
A4DS2	1990-0822	4	13	DISPLAY-NUMERIC	28480	1990-0822
A4DS3	1990-0822	4		DISPLAY-NUMERIC	28480	1990-0822
A4DS4	1990-0822	4		DISPLAY-NUMERIC	28480	1990-0822
A4DS5	1990-0822	4		DISPLAY-NUMERIC	28480	1990-0822
A4DS6	1990-0822	4		DISPLAY-NUMERIC	28480	1990-0822
A4DS7	1990-0822	4		DISPLAY-NUMERIC	28480	1990-0822
A4DS8	1990-0822	4		DISPLAY-NUMERIC	28480	1990-0822
A4DS9	1990-0822	4		DISPLAY-NUMERIC	28480	1990-0822
A4DS10	1990-0822	4		DISPLAY-NUMERIC	28480	1990-0822
A4DS11	1990-0822	4		DISPLAY-NUMERIC	28480	1990-0822
A4DS12	1990-0822	4		DISPLAY-NUMERIC	28480	1990-0822
A4DS13	1990-0822	4		DISPLAY-NUMERIC	28480	1990-0822
A4DS14	1990-0822	4		DISPLAY-NUMERIC	28480	1990-0822
A4DS15-A4DS41				NOT ASSIGNED		
A4DS42	2140-0092	0	5	LAMP-INCAND 685 5VDC 60MA T-1-BULB	00115	685 TIP END
A4DS43	2140-0092	0		LAMP-INCAND 685 5VDC 60MA T-1-BULB	00115	685 TIP END
A4DS44	2140-0092	0		LAMP-INCAND 685 5VDC 60MA T-1-BULB	00115	685 TIP END
A4DS45	2140-0253	5	2	LAMP-INCAND 6839 28VDC 24MA T-1-BULB	1F556	6839
A4DS46	2140-0253	5		LAMP-INCAND 6839 28VDC 24MA T-1-BULB	1F556	6839
A4DS47	2140-0092	0		LAMP-INCAND 685 5VDC 60MA T-1-BULB	00115	685 TIP END
A4DS48	2140-0092	0		LAMP-INCAND 685 5VDC 60MA T-1-BULB	00115	685 TIP END
A4J1	08673-60040	9	1	CONNECTOR ASSEMBLY-OUTPUT	28480	08673-60040
A4M1	1120-0585	3	1	METER 2.50-IN; 1 MA FSD; TAUT BAND; LIN	28480	1120-0585
A4MP1	0360-0270	0	2	TERMINAL-SLDR LUG LK-MTG FOR-#10-SCR	28480	0360-0270
A4MP2	0370-3023	8	2	KNOB3/4 JGK .25-IN-ID	28480	0370-3023
A4MP3	0510-1148	2	4	RETAINER-PUSH ON KB-TO-SHFT EXT	28480	0510-1148
A4MP4	0590-1011	6	4	NUT-KNRLD-R 15/32-32-THD .12-IN-THK	28480	0590-1011
A4MP5	2190-0016	3	4	WASHER-LK INTL T 3/8 IN .377-IN-ID	28480	2190-0016
A4MP6	2190-0019	6	2	WASHER-LK HLCL NO. 4 .115-IN-ID	28480	2190-0019
A4MP7	2190-0022	1	1	WASHER-LK INTL T 3/8 IN .384-IN-ID	28480	2190-0022
A4MP8	2190-0067	4	1	WASHER-LK INTL T 1/4 IN .256-IN-ID	28480	2190-0067
A4MP9	2200-0105	4	18	SCREW-MACH 4-40 .312-IN-LG PAN-HD-POZI	00000	ORDER BY DESCRIPTION
A4MP10	2200-0143	0	2	SCREW-MACH 4-40 .375-IN-LG PAN-HD-POZI	00000	ORDER BY DESCRIPTION
A4MP11	2200-0164	5	2	SCREW-MACH 4-40 .188-IN-LG UNCT 82 DEG	00000	ORDER BY DESCRIPTION
A4MP12	2200-0166	7	18	SCREW-MACH 4-40 .312-IN-LG 82 DEG	00000	ORDER BY DESCRIPTION
A4MP13	2740-0001	3	2	NUT-HEX-DBL-CHAM 10-32-THD .109-IN-THK	00000	ORDER BY DESCRIPTION
A4MP14	2950-0001	8	4	NUT-HEX-DBL-CHAM 3/8-32-THD .094-IN-THK	00000	ORDER BY DESCRIPTION
A4MP15	2950-0072	3	1	NUT-HEX-DBL-CHAM 1/4-32-THD .062-IN-THK	00000	ORDER BY DESCRIPTION
A4MP16	3050-0161	4	1	WASHER-SPR WAVY 1/4 IN .265-IN-ID	28480	3050-0161
A4MP17	5040-6928	4	1	DIVIDER STRIP	28480	5040-6928
A4MP18	5041-1418	9	1	ROCKER	28480	5041-1418
A4MP19	00310-48801	0	4	WASHER-SHOULDERED	28480	00310-48801
A4MP20	08640-40044	2	1	SCREW-METER ZERO	28480	08640-40044
A4MP21	08672-20037	9	4	SUPPORT-FRONT PANEL	28480	08672-20037
A4MP22	08672-20056	2	1	PAD-L.E.D.	28480	08672-20056
A4MP23	08672-20057	3	1	HEAT SINK-L.E.D.	28480	08672-20057
A4MP24	08672-40006	4	7	HOUSING-LAMP (LONG)	28480	08672-40006
A4MP25	08672-40008	6	7	BAR LIGHT (LONG)	28480	08672-40008
A4MP26	08672-40010	0	7	PLUG LIGHT	28480	08672-40010
A4MP27	08673-00001	6	1	PANEL (FRONT)	28480	08673-00001
A4MP28	08673-00002	7	1	PANEL-SUB (FRONT)	28480	08673-00002
A4MP29	08673-00017	4	1	SPACER-METER	28480	08673-00017
A4MP30	08673-20016	5	1	HEAT SINK-L.E.D.	28480	08673-20016
A4MP31	08673-20018	7	4	SUPPORT (BOTTOM)	28480	08673-20018
A4MP32	08673-20087	0	3	WASHER-SHOULDERED	28480	08673-20087
A4R1	2100-2590	3	1	RESISTOR-VAR CONTROL CCP 10K 10% 10CW	28480	2100-2590
A4R2	2100-3915	8	1	RESISTOR-VAR CONTROL C 10K 10% LIN	28480	2100-3915
A4S1	3101-2080	9	1	SWITCH-LINE DPDT (LINE)	28480	3101-2080
A4U1	5060-9444	7	1	ROTARY PULSE GENERATOR (RPG)	28480	5060-9444
A4W1	08673-60036	3	1	CABLE ASSEMBLY-ALC	28480	08673-60036
A4W2	08673-60037	4	1	CABLE ASSEMBLY-AM INPUT	28480	08673-60037
A4W3	08673-60038	5	1	CABLE ASSEMBLY-FM INPUT	28480	08673-60038
A4W4	08673-60039	6	1	CABLE ASSEMBLY-PULSE INPUT	28480	08673-60039

See introduction to this section for ordering information
*Indicates factory selected value

Table 6-3. Replaceable Parts

Reference Designation	HP Part Number	C D	Qty	Description	Mfr Code	Mfr Part Number
				8673A CHASSIS/MISCELLANEOUS PARTS		
W1	8120-1378	1	1	POWER CABLE ASSY- 18AWG 3-CNDCT	28480	8120-1378
	2680-0100	5	4	SCREW-MACH 10-32 .375-IN-LG 100 DEG	00000	ORDER BY DESCRIPTION
	08640-60036	4	1	BOARD ASSEMBLY-EXTENDER	28480	08640-60036
	08673-20021	2	1	WINDOW-FRONT	28480	08673-20021
	08673-00037	8	1	WINDOW-RF SECTION	28480	08673-00037
	08673-20022	3	1	SHIELD-RFI	28480	08673-20022
	1460-0553	5	1	CLIP-WINDOW	28480	1460-0553
	1494-0017	7	1	STANDARD SLIDE KIT	28480	1494-0017
	5040-6927	3	1	DIVIDER STRIP	28480	5040-6927
	5060-9462	9	1	ADAPTER, HP-IB	28480	5060-9462
	5061-2034	9	1	OPERATING INSTRUCTION CARD	28480	5061-2034
	9320-4970	0	1	TRAY-OPERATING INSTRUCTION CARD	28480	9320-4970
	5061-0077	6	1	RACK MOUNT FLANGE KIT	28480	5061-0077
	5061-0089	0	1	FRONT HANDLE KIT	28480	5061-0089

See introduction to this section for ordering information
*Indicates factory selected value

Table 6-3. Replaceable Parts

Reference Designation	HP Part Number	C D	Qty	Description	Mfr Code	Mfr Part Number
				ILLUSTRATED PARTS BREAKDOWN		
1	5001-0439	8	2	SIDE TRIM,FRONT FRAME W/O FRONT HANDLE	28480	5001-0439
2	5040-7220	1	2	STRAP-HANDLE, CAP-REAR	28480	5040-7220
3	0570-1170	6	4	RETAINER-SCREW FOR STRAP HANDLE	28480	0570-1170
4	5060-9938	4	2	COVER-PERFORATED SIDE	28480	5060-9938
5	5020-8883	2	4	STRUT-CORNER 21"	28480	5020-8883
6	86701-20007	3	1	FRAME-REAR MOD	28480	86701-20007
7	5040-7221	2	4	STANDOFF-REAR PANEL	28480	5040-7221
8	0570-1171	7	2	CAPTIVE SCREW (USE W/TOP & BOTTOM COVERS SEE ALSO ITEM 9)	00000	ORDER BY DESCRIPTION
9	0510-0043	4	1	CLIP (USE W/TOP & BOTTOM COVERS; SEE ALSO ITEM 8)	28480	0510-0043
10	5060-9836	1	1	COVER-TOP 21"	28480	5060-9836
11	5040-7202	9	1	TRIM- (TOP)	28480	5040-7202
12	5001-0432	1	1	GUSSET-SIDE	28480	5001-0432
13	5060-9805	4	1	STRAP-HANDLE 21"	28480	5060-9805
14	5020-8803	6	1	FRAME (FRONT)	28480	5020-8803
15	5040-7201	8	4	FOOT FULL 1/2 MOD.	28480	5040-7201
16	5060-9848	5	1	COVER-21" (BOTTOM)	28480	5060-9848
17	1460-1345	5	2	TILT STAND SST	28480	1460-1345
18	5040-7219	8	2	STRAP-HANDLE, CAP-FRONT	28480	5040-7219

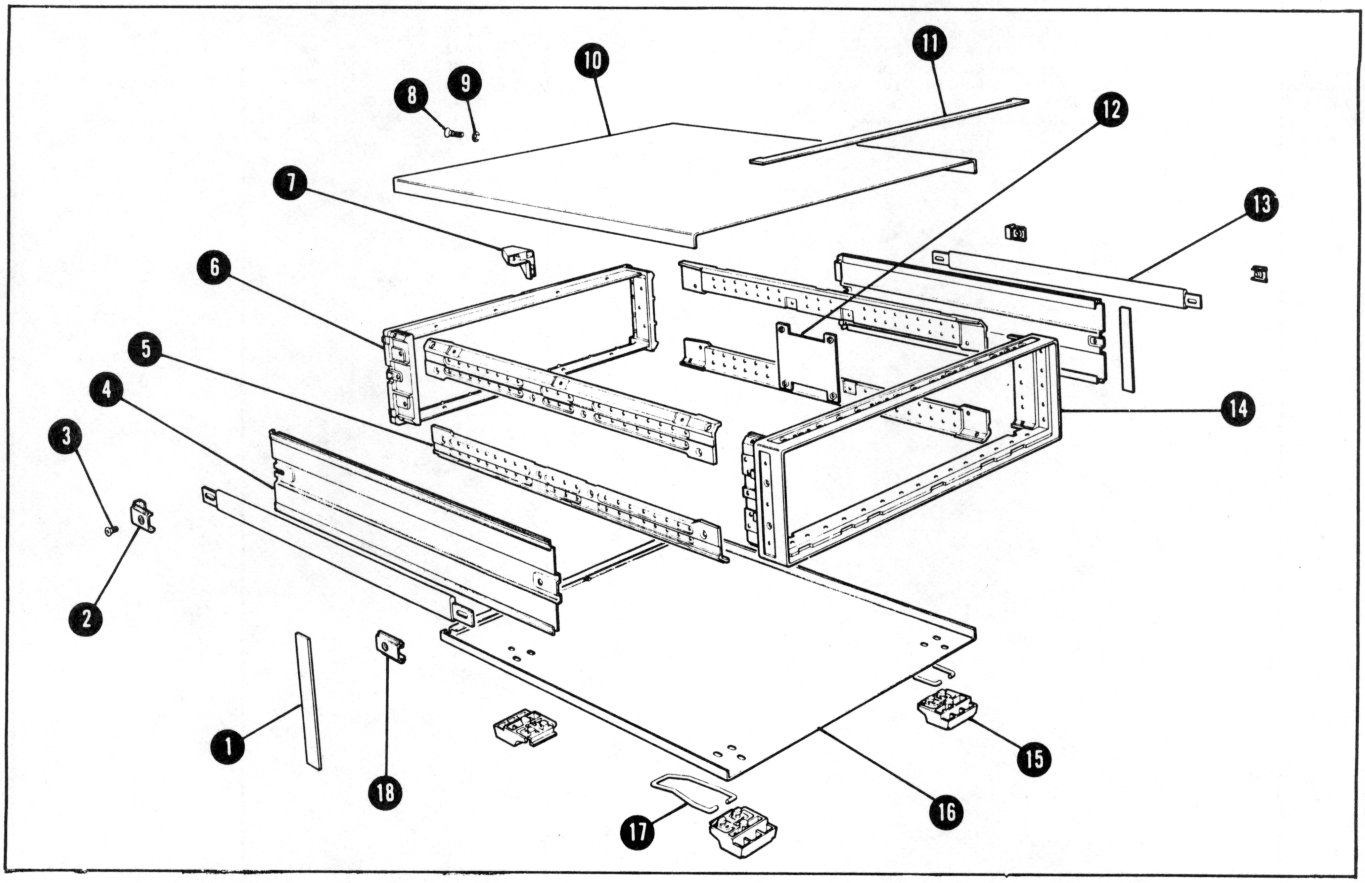

Figure 6-1. Synthesizer Cabinet Parts

See introduction to this section for ordering information
*Indicates factory selected value

Table 6-4. Code List of Manufacturers

Mfr Code	Manufacturer Name	Address		Zip Code
00000	ANY SATISFACTORY SUPPLIER	VINELAND	NJ	08360
00115	ACE GLASS INC	MILWAUKEE	WI	53204
01121	ALLEN-BRADLEY CO	LAWNDALE	CA	90260
01281	TRW INC SEMICONDUCTOR DIV	DALLAS	TX	75222
01295	TEXAS INSTR INC SEMICOND CMPNT DIV	CITY OF IND	CA	91745
02111	SPECTROL ELECTRONICS CORP	AUBURN	NY	13201
03508	GE CO SEMICONDUCTOR PROD DEPT	WHIPPANY	NJ	07981
03888	K D I PYROFILM CORP	PHOENIX	AZ	85008
04713	MOTOROLA SEMICONDUCTOR PRODUCTS	WAKEFIELD	MA	01880
05820	WAKEFIELD ENGINEERING INC	COLUMBIA	SC	29063
06001	MEPCO ELECTRA CORP	TINLEY PARK	IL	60477
06383	PANDUIT CORP	SANTA CLARA	CA	95050
06665	PRECISION MONOLITHICS INC	MOUNTAIN VIEW	CA	94042
07263	FAIRCHILD SEMICONDUCTOR DIV	SHELTON	CT	06484
07707	USM CORP USM FASTENER DIV	MOUNTAIN VIEW	CA	94040
07933	RAYTHEON CO SEMICONDUCTOR DIV HQ	MOUNTAIN VIEW	CA	94040
1F556	PRECISION LAMP INC	MANCHESTER	NH	03130
14140	EDISON ELEK DIV MCGRAW-EDISON	FARMINGTON	MI	03054
16179	OMNI SPECTRA INC	SANTA CLARA	CA	95054
17856	SILICONIX INC	SUNNYVALE	CA	94086
18324	SIGNETICS CORP	MINERAL WELLS	TX	76067
19701	MEPCO/ELECTRA CORP	SAN DIEGO	CA	92129
20932	EMCON DIV ITW	EL MONTE	CA	91731
20940	MICRO-OHM CORP	WAKEFIELD	MA	01880
24046	TRANSITRON ELECTRONIC CORP	NORWOOD	MA	02062
24355	ANALOG DEVICES INC	BRADFORD	PA	16701
24546	CORNING GLASS WORKS (BRADFORD)	ISELIN	NJ	08830
25088	SIEMENS CORP	SANTA CLARA	CA	95051
27014	NATIONAL SEMICONDUCTOR CORP	PALO ALTO	CA	94304
28480	HEWLETT-PACKARD CO CORPORATE HQ	SOMERVILLE	NJ	
31585	RCA CORP SOLID STATE DIV	SAN DIEGO	CA	92121
30983	MEPCO/ELECTRA CORP	RIVERSIDE	CA	92507
32997	BOURNS INC TRIMPOT PROD DIV	SUNNYVALE	CA	94086
34335	ADVANCED MICRO DEVICES INC	MELBOURNE	FL	32901
34371	HARRIS SEMICON DIV HARRIS-INTERTYPE	SANTA ANA	CA	92705
52648	PLESSEY SEMICONDUCTORS	CAZENOVIA	NY	13035
52763	STETTNER-TRUSH INC	SELMA	NC	27576
54294	SHALLCROSS INC	NORTH ADAMS	MA	01247
56289	SPRAGUE ELECTRIC CO	FLORENCE	SC	06226
72136	ELECTRO MOTIVE CORP	ERIE	PA	16512
72982	ERIE TECHNOLOGICAL PRODUCTS INC	FULLERTON	CA	92634
73138	BECKMAN INSTRUMENTS INC HELIPOT DIV	WASECA	MN	56093
74970	JOHNSON E F CO	PHILADELPHIA	PA	19108
75042	TRW INC PHILADELPHIA DIV	DES PLAINES	IL	60016
75915	LITTELFUSE INC	COLUMBUS	NE	68601
91637	DALE ELECTRONICS INC			

SECTION VII

MANUAL CHANGES

7-1. INTRODUCTION

This section normally contains information for adapting this manual to instruments for which the content does not apply directly. Since this manual does apply directly to instruments having serial numbers listed on the title page, no change information is given here. Refer to INSTRUMENTS COVERED BY MANUAL in Section I for additional important information about serial number coverage.

SECTION VIII

SERVICE

8-1. INTRODUCTION

This section contains preliminary information for limited troubleshooting and repairing of the Signal Generator. Included are block and circuit diagrams.

8-2. SERVICE SHEETS

The foldout pages in this section are service sheets and consist of block diagrams and circuit diagrams.

8-3. Block Diagrams

Block diagrams are found on Service Sheets 1 through 4. Service Sheet 1 is the overall block diagram and shows the major functional sections. Service Sheet 2 is a block diagram of the A3 RF Source Section. Service Sheet 3 is a block diagram of the A1 RF Output Section. Service Sheet 4 is a block diagram of the A2 Controller Section.

8-4. Circuit Diagrams

Circuit diagrams and their associated information for assemblies in A1 RF Output Section are located on Service Sheets 1A1 through 9A1. For assemblies in A2 Controller Section, schematics are located on Service Sheets 1A2 through 11A2. Service Sheets 1A3 through 13A3 contain schematics for A3 RF Source Section. Front Panel Section A4 schematics are on Service Sheets 1A4 and 2A4.

These diagrams, in functional groupings, are aids for understanding operation and for troubleshooting the Signal Generator.

8-5. SAFETY CONSIDERATIONS

8-6. Before Applying Power

Verify that the instrument is set to match the available line voltage and that the correct fuse is installed. An uninterrupted safety earth ground must be provided from the main power source to the instrument input wiring terminals, power cord, or supplied power cord set.

8-7. Warnings and Cautions

Pay attention to WARNINGS and CAUTIONS. They must be followed for your protection and to avoid damage to the equipment.

WARNINGS

Maintenance described herein is performed with power supplied to the instrument and with the protective covers removed. Such maintenance should be performed only by service-trained personnel who are aware of the hazards involved (for example, fire and electrical shock). Where maintenance can be performed without power supplied, the power should be removed.

Any interruption of the protective (grounding) conductor (inside or outside the instrument) or disconnection of the protective earth terminal will create a potential shock hazard that could result in personal injury. Grounding one conductior of a two conductor outlet is not sufficient. Whenever it is likely that the protection has been impaired, the instrument must be made inoperative (i.e., secured against unintended operation).

If this instrument is to be energized via an autotransformer, make sure that the autotransformer's common terminal is connected to neutral (grounded side of mains supply).

Capacitors inside the instrument can still be charged even if the instrument is disconnected from its source of supply.

Make sure that only 250 volt fuses with the required rated current and of the specified type (normal blow, time delay, etc.) are used for replacement. Do not use repaired fuses or short-circuited fuseholders. To do so could create a shock or fire hazard.

CAUTIONS

Do not disconnect or remove any boards in the Signal Generator unless the instrument is unplugged. Some boards contain devices which can be damaged if the board is removed when the power is on. Use conductive foam when removing MOS devices from sockets. Use care when unplugging ICs from high-grip sockets.

8-8. RECOMMENDED TEST EQUIPMENT AND ACCESSORIES

Test equipment and test accessories required to maintain the Signal Generator are listed in Table 1-3, Recommended Test Equipment. Other equipment may be substituted if the listed critical specifications are met.

8-9. Parts and Cable Locations

The locations of individual components mounted on printed circuit boards or other assemblies are shown adjacent to the schematic diagram on the appropriate Service Sheet. The part reference designator is the assembly designator plus the part designator.

For example, A6R9 is R9 on the A6 assembly. For specific component descriptions and ordering information, refer to Table 6-3, Replaceable Parts, in Section VI. Chassis and frame parts, as well as mechanical parts and cables, are identified.

Major mechanical parts have reference designations that begin with the letters MP. Other mechanical parts, such as screws, are listed in the replaceable parts list below the part to which they fasten.

8-10. TROUBLESHOOTING

8-11. General

Instrument problems usually occur in three general categories: operator errors, operation out of specification and catastrophic failures. The troubleshooting strategy is different for each category. For more information refer to the table of Specifications in Section I.

8-12. Operator Error

Apparent failures sometimes result from operator errors and may take one of several forms. The operator may allow external influences which affect instrument operation or may attempt to operate the instrument in an "out of specification" mode. Under certain circumstances the Signal Generator allows the out of specification operation. Under other conditions it does not.

8-13. Instrument Out of Specification

If it is suspected that the instrument's operating parameters are out o tolerance, the Abbreviated Performance Tests table in Section IV tells which test may be performed to verify proper operation. This table may also be used to determine which assembly requires adjusting and on what service sheet the adjustable components are located.

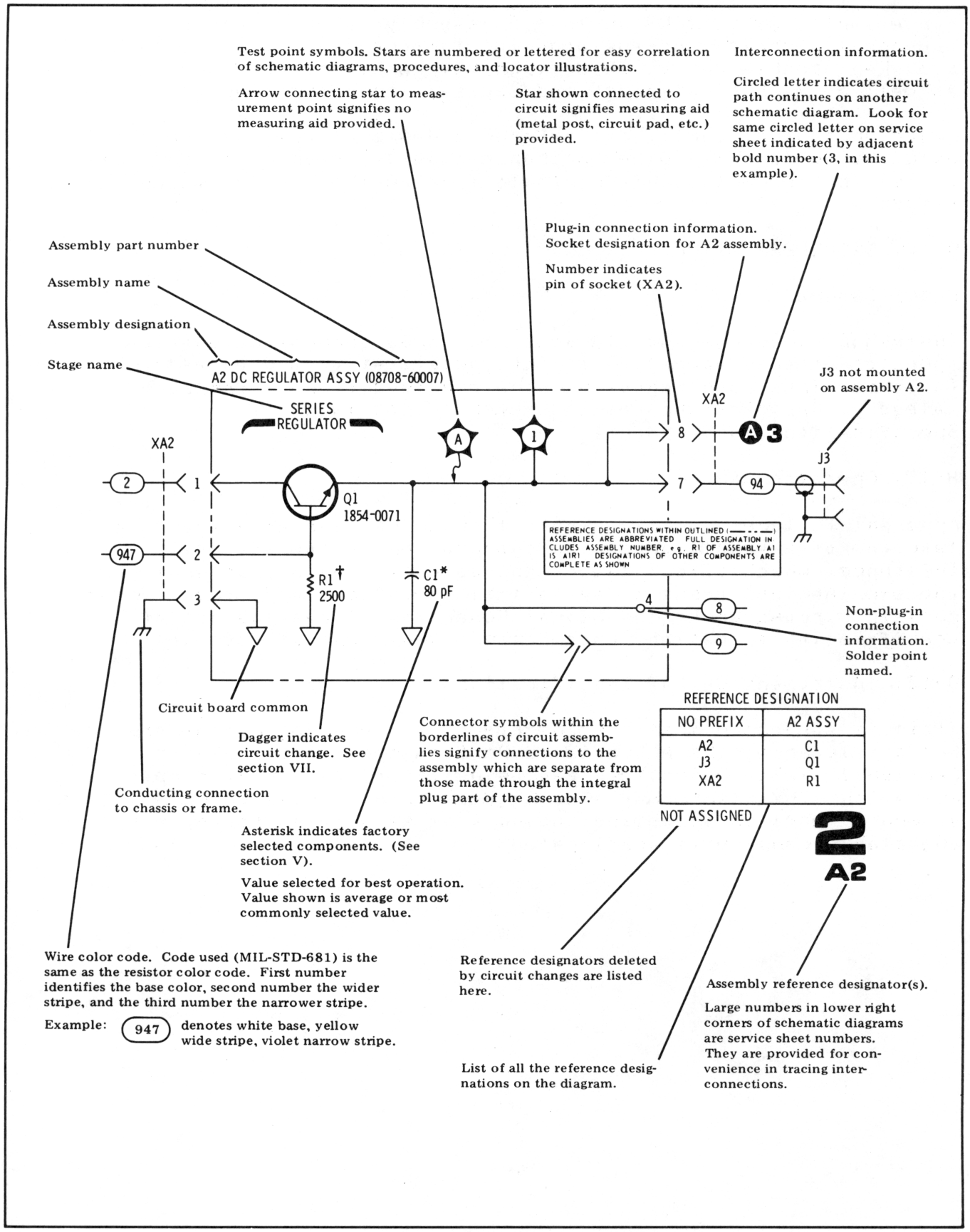

Figure 8-1. Schematic Diagram Notes (1 of 8)

SCHEMATIC DIAGRAM NOTES

* Asterisk denotes a factory-selected value. Value shown is typical.

† Dagger indicates circuit change. See Section VII.

Tool-aided adjustment. ○ Manual control.

Encloses front-panel designation.

Encloses rear-panel designation.

Circuit assembly borderline.

Other assembly borderline.

Heavy line with arrows indicates path and direction of main signal.

Heavy dashed line with arrows indicates path and direction of main feedback.

Indicates stripline (i.e., RF transmission line above ground).

CW Wiper moves toward cw with clockwise rotation of control (as viewed from shaft or knob).

1 Numbered Test Point
measurement aid provided.

Encloses wire or cable color code. Code used is the same as the resistor color code. First number identifies the base color, second number identifies the wider stripe, and the third number identifies the narrower stripe, e.g., denotes white base, yellow wide stripe, violet narrow stripe.

A direct conducting connection to earth, or a conducting connection to a structure that has a similar function (e.g., the frame of an air, sea, or land vehicle).

A conducting connection to a chassis or frame.

Common connections. All like-designation points are connected.

AK 12 Letters = off-page connection, e.g., AK
Number = Service Sheet number for off-page connection, e.g., **12**

1 THIS PAGE Number (only) = on-page connection.

Figure 8-1. Schematic Diagram Notes (2 of 8)

SCHEMATIC DIAGRAM NOTES

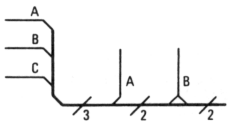

Indicates multiple paths represented by only one line. Letters or names identify individual paths. Numbers indicate number of paths represented by the line.

Coaxial or shielded cable.

Relay. Contact moves in direction of arrow when energized.

Indicates a pushbutton switch with a momentary (ON) position.

Indicates a PIN diode.

Indicates a current regulation diode.

Indicates a voltage regulation diode.

Indicates a Schottky (hot-carrier) diode.

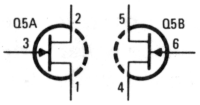

Multiple transistors in a single package—physical location of the pins is shown in package outline on schematic.

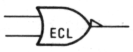

Identification of logic families as shown (in this case, ECL).

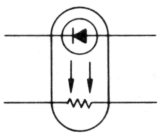

Indicates an opto-isolator of a LED and a photoresistor packaged together. The resistance of the photoresistor is a function of the current flowing through the LED.

Figure 8-1. Schematic Diagram Notes (3 of 8)

DIGITAL SYMBOLOGY REFERENCE INFORMATION

Input and Output Indicators

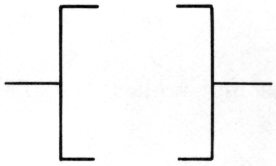

Implied Indicator—Absence of polarity indicator (see below) implies that the active state is a relative high voltage level. Absence of negation indicator (see below) implies that the active state is a relative high voltage level at the input or output.

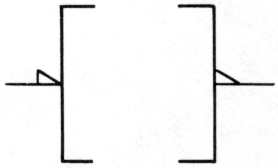

Polarity Indicator—The active state is a relatively low voltage level.

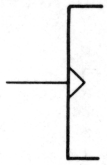

Dynamic Indicator—The active state is a transition from a relative low to a relative high voltage level.

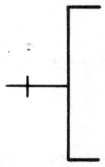

Inhibit Input—Input that, when active, inhibits (blocks) the active state outputs of a digital device.

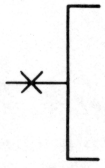

Analog Input—Input that is a continuous signal function (e.g., a sine wave).

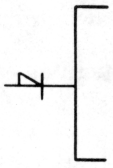

Polarity Indicator used with Inhibit Indicator—Indicates that the relatively low level signal inhibits (blocks) the active state outputs of a digital device.

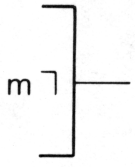

Output Delay—Binary output changes state only after the referenced input (m) returns to its inactive state (m should be replaced by appropriate dependency or function symbols).

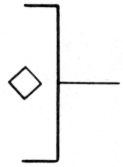

Open Collector Output—Output that must form part of a distributed connection.

Figure 8-1. Schematic Diagram Notes (4 of 8)

DIGITAL SYMBOLOGY REFERENCE INFORMATION

Input and Output Indicators (Cont'd)

3-STATE	Three-state Output—Indicates outputs that can have a high impedance (disconnect) state in addition to the normal binary logic states.

Combinational Logic Symbols and Functions

&	AND—All inputs must be active for the output to be active.
≥1	OR—One or more inputs being active will cause the output to be active.
≥m	Logic Threshold—m or more inputs being active will cause the output to be active (replace m with a number).
=1	EXCLUSIVE OR—Output will be active when one (and only one) input is active.
=m	m and only m—Output will be active when m (and only m) inputs are active (replace m with a number).
=	Logic Identity—Output will be active only when all or none of the inputs are active (i.e., when all inputs are identical, output will be active).
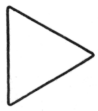	Amplifier—The output will be active only when the input is active (can be used with polarity or logic indicator at input or output to signify inversion).
X/Y	Signal Level Converter—Input level(s) are different than output level(s).
	Bilateral Switch—Binary controlled switch which acts as an on/off switch to analog or binary signals flowing in both directions. Dependency notation should be used to indicate affecting/affected inputs and outputs. Note: amplifier symbol (with dependency notation) should be read to indicate unilateral switching.
X→Y	Coder—Input code (X) is converted to output code (Y) per weighted values or a table.
(Functional Labels)	The following labels are to be used as necessary to ensure rapid identification of device function.
MUX	Multiplexer—The output is dependent only on the selected input.
DEMUX	Demultiplexer—Only the selected output is a function of the input.
CPU	Central Processing Unit
PIO	Peripheral Input/Output
SMI	Static Memory Interface

Figure 8-1. Schematic Diagram Notes (5 of 8)

DIGITAL SYMBOLOGY REFERENCE INFORMATION

Sequential Logic Functions

1 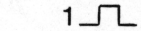	Monostable—Single shot multivibrator. Output becomes active when the input becomes active. Output remains active (even if the input becomes inactive) for a period of time that is characteristic of the device and/or circuit.
G 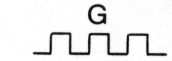	Oscillator—The output is a uniform repetitive signal which alternates between the high and low state values. If an input is shown, then the output will be active if and only if the input is in the active state.
FF	Flip-Flop—Binary element with two stable states, set and reset. When the flip-flop is set, its outputs will be in their active states. When the flip-flop is reset, its outputs will be in their inactive states.
T	Toggle Input—When active, causes the flip-flop to change states.
S	Set Input—When active, causes the flip-flop to set.
R	Reset Input—When active, causes the flip-flop to reset.
J	J Input—Analogous to set input.
K	K Input—Analogous to reset input.
D	Data Input—Always enabled by another input (generally a C input—see Dependency Notation). When the D input is dependency-enabled, a high level at D will set the flip-flop; a low level will reset the flip-flop. Note: strictly speaking, D inputs have no active or inactive states—they are just enabled or disabled.
m	Count-Up Input—When active, increments the contents (count) of a counter by "m" counts (m is replaced with a number).
−m	Count-Down Input—When active, decrements the contents (count) of a counter by "m" counts (m is replaced with a number).
→m	Shift Right (Down) Input—When active, causes the contents of a shift register to shift to the right or down "m" places (m is replaced with a number).
← m	Shift Left (Up) Input—When active, causes the contents of a shift register to shift to the left or up "m" places (m is replaced with a number).

NOTE

For the four functions shown above, if m is one, it is omitted.

(Functional Labels)	The following functional labels are to be used as necessary in symbol build-ups to ensure rapid identification of device function.

Figure 8-1. Schematic Diagram Notes (6 of 8)

DIGITAL SYMBOLOGY REFERENCE INFORMATION

Sequential Logic Functions (Cont'd)

mCNTR	Counter—Array of flip-flops connected to form a counter with modulus m (m is replaced with a number that indicates the number of states: 5 CNTR, 10 CNTR, etc.).
REG	Register—Array of unconnected flip-flops that form a simple register or latch.
SREG	Shift Register—Array of flip-flops that form a register with internal connections that permit shifting the contents from flip-flop to flip-flop.
ROM	Read Only Memory—Addressable memory with read-out capability only.
RAM	Random Access Memory—Addressable memory with read-in and read-out capability.

Dependency Notation

mAm	Address Dependency—Binary affecting inputs of affected outputs. The m prefix is replaced with a number that differentiates between several address inputs, indicates dependency, or indicates demultiplexing and multiplexing of address inputs and outputs. The m suffix indicates the number of cells that can be addressed.
Gm	Gate (AND) Dependency—Binary affecting input with an AND relationship to those inputs or outputs labeled with the same identifier. The m is replaced with a number or letter (the identifier).
Cm	Control Dependency—Binary affecting input used where more than a simple AND relationship exists between the C input and the affected inputs and outputs (used only with D-type flip-flops).
Vm	OR Dependency—Binary affecting input with an OR relationship to those inputs or outputs labeled with the same identifier. The m is replaced with a number or the letter (the identifier).
Fm	Free Dependency—Binary affecting input acting as a connect switch when active and a disconnect when inactive. Used to control the 3-state behavior of a 3-state device.

NOTE

The identifier (m) is omitted if it is one—that is, when there is only one dependency relationship of that kind in a particular device. When this is done, the dependency indicator itself (G, C, F, or V) is used to prefix or suffix the affected (dependent) input or output.

Figure 8-1. Schematic Diagram Notes (7 of 8)

DIGITAL SYMBOLOGY REFERENCE INFORMATION

Miscellaneous

Schmitt Trigger—Input characterized by hysterisis; one threshold for positive going signals and a second threshold for negative going signals.

Active

Active State—A binary physical or logical state that corresponds to the true state of an input, an output, or a function. The opposite of the inactive state.

Enable

Enabled Condition—A logical state that occurs when dependency conditions are satisfied. Although not explicitly stated in the definitions listed above, functions are assumed to be enabled when their behavior is described. A convenient way to think of it is as follows:

A function becomes active when:

- it is enabled (dependency conditions—if any—are satisfied)
- and its external stimuls (e.g., voltage level) enters the active state.

Figure 8-1. Schematic Diagram Notes (8 of 8)

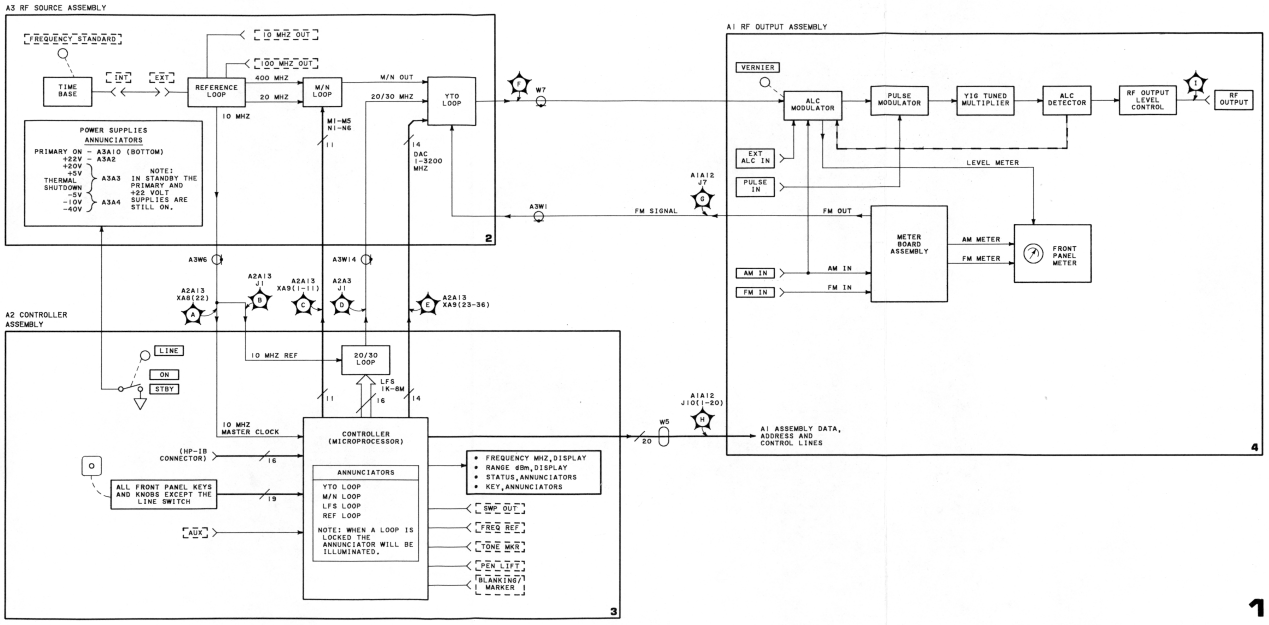
A3 RF SOURCE ASSEMBLY
FREQUENCY STANDARD
10 MHZ OUT
100 MHZ OUT
TIME BASE
INT
EXT
REFERENCE LOOP
400 MHZ
20 MHZ
10 MHZ
M/N LOOP
M/N OUT
20/30 MHZ
YTO LOOP
W7
M1-M5
N1-N6
11
14
DAC
1-3200
MHZ
POWER SUPPLIES
ANNUNCIATORS
PRIMARY ON - A3A10 (BOTTOM)
+22V - A3A2
+20V
+15V
THERMAL SHUTDOWN
A3A3
-5V
-10V
-40V
A3A4
NOTE:
IN STANDBY THE PRIMARY AND +22 VOLT SUPPLIES ARE STILL ON.
2
A3W6
A3W14
A2A13 J1
A2A13 XA8(22)
A2A13 XA9(1-11)
A2A3 J1
A2A13 XA9(23-36)
A2 CONTROLLER ASSEMBLY
LINE
ON
STBY
10 MHZ REF
20/30 LOOP
LFS
1K-8M
16
14
11
10 MHZ MASTER CLOCK
(HP-IB CONNECTOR)
16
ALL FRONT PANEL KEYS AND KNOBS EXCEPT THE LINE SWITCH
19
AUX
CONTROLLER (MICROPROCESSOR)
ANNUNCIATORS
YTO LOOP
M/N LOOP
LFS LOOP
REF LOOP
NOTE: WHEN A LOOP IS LOCKED THE ANNUNCIATOR WILL BE ILLUMINATED.
• FREQUENCY MHZ,DISPLAY
• RANGE dBm,DISPLAY
• STATUS,ANNUNCIATORS
• KEY,ANNUNCIATORS
SWP OUT
FREQ REF
TONE MKR
PEN LIFT
BLANKING/MARKER
3
W5
20
A1A12 J10(1-20)
A1 ASSEMBLY DATA, ADDRESS AND CONTROL LINES
A1 RF OUTPUT ASSEMBLY
VERNIER
ALC MODULATOR
PULSE MODULATOR
YIG TUNED MULTIPLIER
ALC DETECTOR
RF OUTPUT LEVEL CONTROL
RF OUTPUT
EXT ALC IN
PULSE IN
LEVEL METER
A1A12 J7
A3W1
FM SIGNAL
FM OUT
METER BOARD ASSEMBLY
AM METER
FM METER
FRONT PANEL METER
AM IN
FM IN
4

1

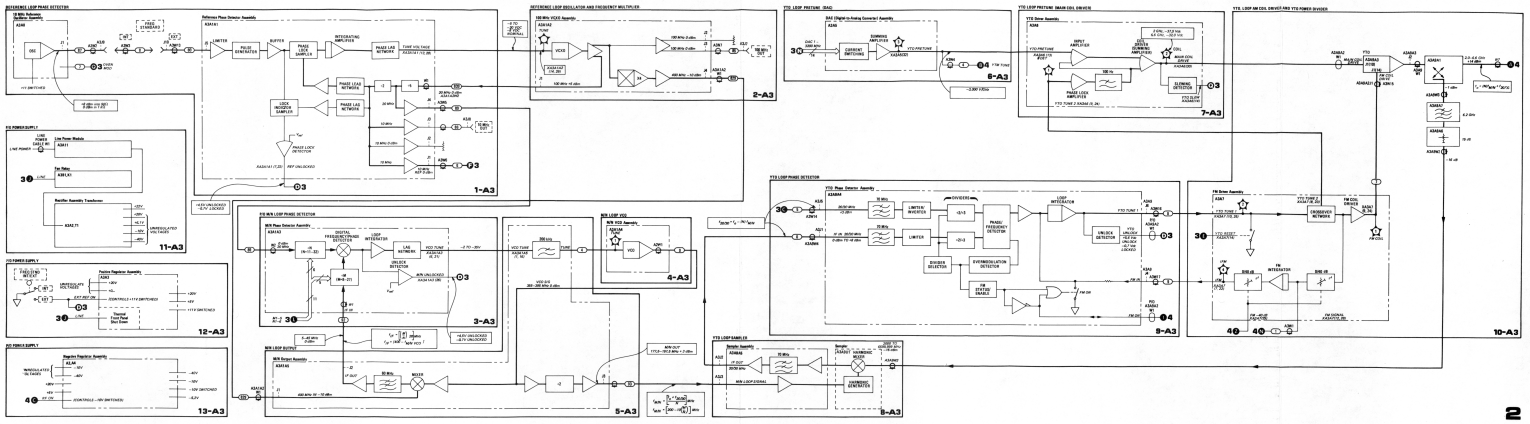
REFERENCE LOOP PHASE DETECTOR
10 MHz Reference Oscillator Assembly
A2A6
Reference Phase Detector Assembly
A2A1A1
LIMITER
PULSE GENERATOR
BUFFER
PHASE SAMPLER
INTEGRATING AMPLIFIER
PHASE LEAD NETWORK
PHASE LAG NETWORK
LOCK DETECTOR SAMPLER
PHASE LOCK DETECTOR
REF UNLOCKED
1-A3
REFERENCE LOOP OSCILLATOR AND FREQUENCY MULTIPLIER
100 MHz VCXO Assembly
A2A1A2
VCXO
100 MHz 2 dBm
50 MHz 2 dBm
400 kHz −10 dBm
100 MHz +8 dBm
2-A3
YTO LOOP PRETUNE (MAIN COIL DRIVER)
YTO Driver Assembly
A2A6
INPUT AMPLIFIER
YTO PRETUNE
PHASE LOCK AMPLIFIER
100 Hz
SWEEP YTO DRIVER AMPLIFIER
A2A6A2
YTO MAIN COIL DRIVER
A2A6A2W2
ULTRONIC DETECTOR
YTO OVEN COLLECTOR
7-A3
YTO LOOP PHASE DETECTOR
YTO Phase Detector Assembly
A2A6A4
DIVIDERS
÷2/÷3
÷2/÷3
PHASE/ FREQUENCY DETECTOR
LOOP INTEGRATOR
LIMITER
LIMITER/ INVERTER
UNLOCK DETECTOR
YTO TUNE 1
YTO TUNE 2
YTO LOOP UNLOCK DETECTOR
A2A6J1
A2A6J2
A2A6J3
A2A6J4
BIASED R SELECTION
OVERMODULATION DETECTOR
FM DISABLE
FM ON
FM OFF
9-A3
FM Driver Assembly
A2A7
YTO TUNE 2 A2A6J2 (5.2K)
YTO TUNE 1 A2A6J1 (2.2K)
FM COIL DRIVE
SUMMER/ HI-PASS
FM COIL
FM COIL RETURN
A2A7J1
A2A7J2
A2A7J3
A2A7J4
SUM JFET
FM INTEGRATOR
SUM AR
SUM JFET
FM SIGNAL A2A6J3 (2K)
10-A3
YTO LOOP BAND CR
Doubler Assembly
A2A6A6
Sampler
A2A6A5
HARMONIC GENERATOR
A2A6A4
YTO LOOP SIGNAL
8-A3
MAIN LOOP PHASE DETECTOR
MAIN Phase Detector Assembly
A2A1A3
DIGITAL FREQUENCY/PHASE DETECTOR
LOOP INTEGRATOR
LAG NETWORK
VCO TUNE A2A1A4J2 (5.1K)
UNLOCK DETECTOR
MAIN UNLOCKED A2A1A4J1 (5K)
3-A3
MAIN LOOP VCO
MAIN VCO Assembly
A2A1A4
VCO
350 MHz
A2A1A4J1
A2A1A4J2
4-A3
MAIN LOOP BUFFER
MAIN Output Assembly
A2A1A5
50 MHz
MIXER
400 MHz 0 dBm
400 MHz 20 – 10 dBm
MAIN OUT 1113—1513 MHz +7 dBm
5-A3
LO POWER SUPPLY
Fixed Line Switch
A2A3
Regulator Regulator Assembly
A2A4
+20V
+5V
+11V SWITCHED
CONTROLLED +11V SWITCHED
Thermal Shut Down Fault Detector
12-A3
AC POWER SUPPLY
Regulator Regulator Assembly
A2A4
+5V
+20V
+15V SWITCHED
−5.2V
13-A3
Line Power Module
A2A11
Fan Motor
A2M1,A1
Rectifier Assembly Transformer
A2A2,T1
+20V
+15V
+5.2V
−15V
−20V
UNREGULATED POS VOLTAGES
11-A3
2

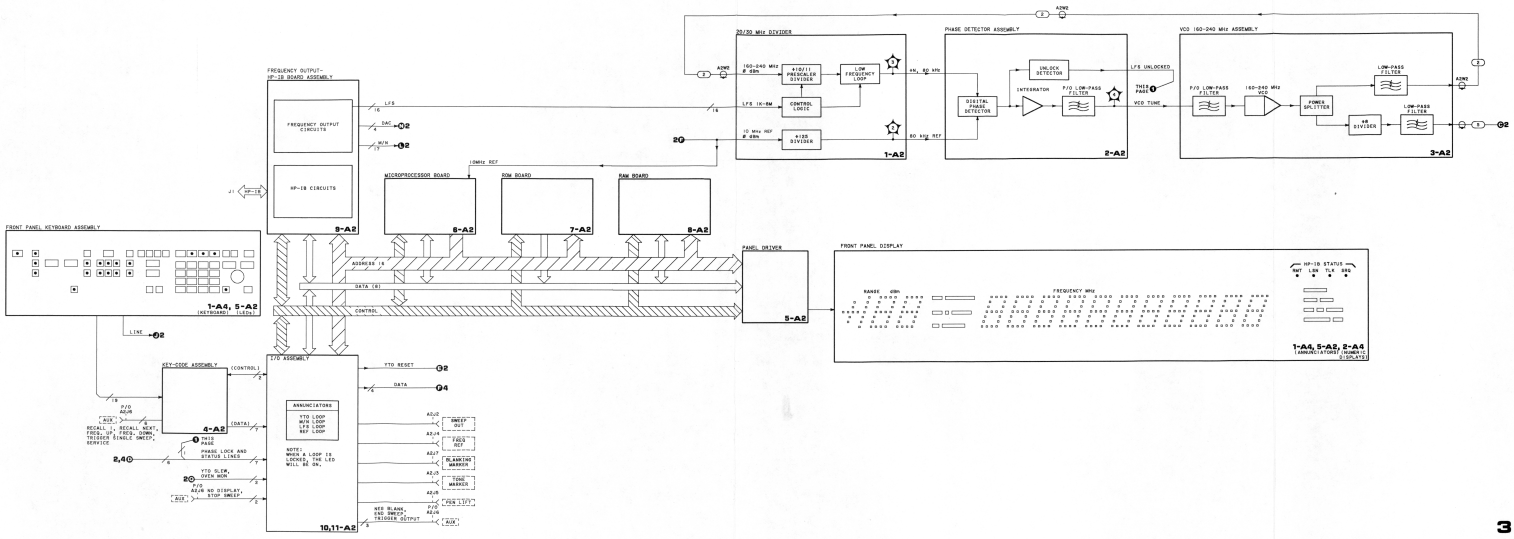
20/30 MHz DIVIDER
160-240 MHz @ 0dBm
÷10/11 PRESCALER DIVIDER
LOW FREQUENCY LOOP
CONTROL LOGIC
÷1/20 DIVIDER
1-A2
PHASE DETECTOR ASSEMBLY
UNLOCK DETECTION
DIGITAL PHASE DETECTOR
INTEGRATOR
P/O LOW-PASS FILTER
LFS UNLOCKED
TUNE PAS
VCO TUNE
2-A2
VCO 160-240 MHz ASSEMBLY
P/O LOW-PASS FILTER
160-240 MHz VCO
POWER SPLITTER
LOW-PASS FILTER
÷8 DIVIDER
3-A2
FREQUENCY OUTPUT- HP-IB BOARD ASSEMBLY
FREQUENCY OUTPUT CIRCUITS
HP-IB CIRCUITS
9-A2
MICROPROCESSOR BOARD
8-A2
ROM BOARD
7-A2
RAM BOARD
6-A2
10MHz REF
FRONT PANEL KEYBOARD ASSEMBLY
1-A4, 5-A2
(KEYBOARD) (LEDs)
ADDRESS (A)
DATA (D)
CONTROL
PANEL DRIVER
5-A2
FRONT PANEL DISPLAY
RANGE dBm
FREQUENCY MHz
HP-IB STATUS
RMT LSN TLK SRQ
1-A4, 5-A2, 2-A4
(ANNUNCIATORS) (MARKER) (ISOLATE)
KEY-CODE ASSEMBLY
4-A2
I/O ASSEMBLY
ANNUNCIATORS
YTO LOOP
MAIN LOOP
YO2 LOOP
REF LOOP
10,11-A2
YTO RESET
DATA
SWEEP OUT
FREQ REF
BLANKING MARKER
SYNC MARKER
P/O A2J5
LINE
RECALL, NEXT, FREQ. DOWN, SINGLE SWEEP, SERVICE
PHASE LOCK AND STATUS LINES
YTO SLOW, OVEN HOT
A2J5 NO DISPLAY, STOP SWEEP
MKR BLANK, END SWEEP, TRIGGER OUTPUT
P/O A2J5
AUX

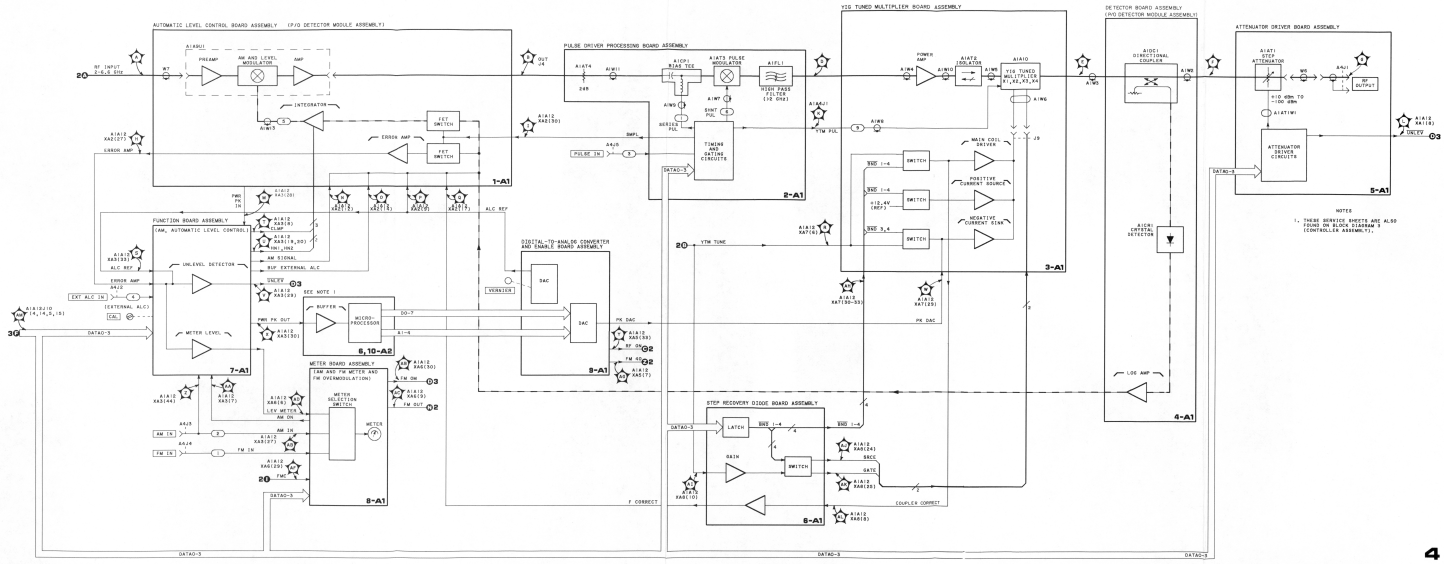
AUTOMATIC LEVEL CONTROL BOARD ASSEMBLY (P/O DETECTOR MODULE ASSEMBLY)
PULSE DRIVER PROCESSING BOARD ASSEMBLY
YIG TUNED MULTIPLIER BOARD ASSEMBLY
DETECTOR BOARD ASSEMBLY (P/O DETECTOR MODULE ASSEMBLY)
ATTENUATOR DRIVER BOARD ASSEMBLY
FUNCTION BOARD ASSEMBLY (AM, AUTOMATIC LEVEL CONTROL)
METER BOARD ASSEMBLY (AM AND FM METER AND FM OVERMODULATION)
DIGITAL-TO-ANALOG CONVERTER AND ENABLE BOARD ASSEMBLY
STEP RECOVERY DIODE BOARD ASSEMBLY
RF INPUT 2-6.6 GHz
INTEGRATOR
ERROR AMP
FET SWITCH
TIMING AND GATING CIRCUITS
PULSE IN
YTM TUNE
MAIN COIL DRIVER
POSITIVE CURRENT SOURCE
NEGATIVE CURRENT SINK
SWITCH
+12.4V (REF)
DIRECTIONAL COUPLER
CRYSTAL DETECTOR
LOG AMP
STEP ATTENUATOR
ATTENUATOR DRIVER CIRCUITS
RF OUTPUT
-10 dBm TO -100 dBm
EXT ALC IN
(EXTERNAL ALC)
CAL
UNLEVEL DETECTOR
METER LEVEL
SEE NOTE 1
BUFFER
MICRO-PROCESSOR
PWR FN OUT
PWR FN IN
AM SIGNAL
BUF EXTERNAL ALC
ALC REF
VERNIER
PK DAC
FM OUT
YTM ON
FM OUT
METER SELECTION SWITCH
METER
AM IN
FM IN
PWR
LEV METER
AM ON
LATCH
SWITCH
GATE
COUPLER CORRECT
F CORRECT
DATAO-3
NOTES
1. THESE SERVICE SHEETS ARE ALSO FOUND ON BLOCK DIAGRAM 9 (CONTROLLER ASSEMBLY).

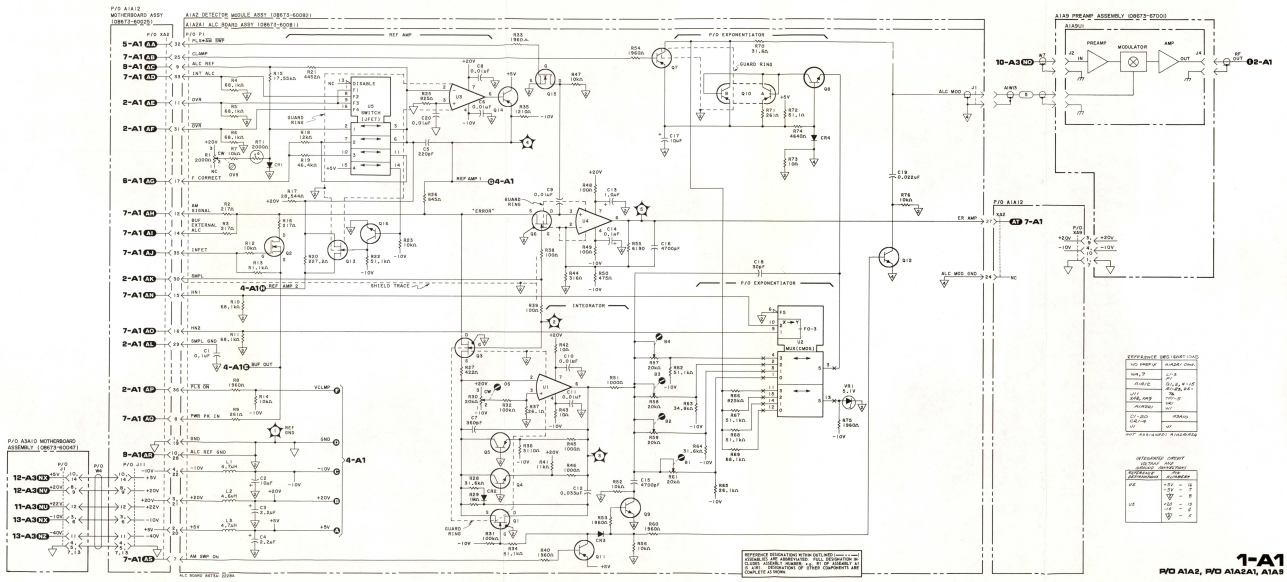

1-A1

P/O A1A2, P/O A1A2A1, A1A3

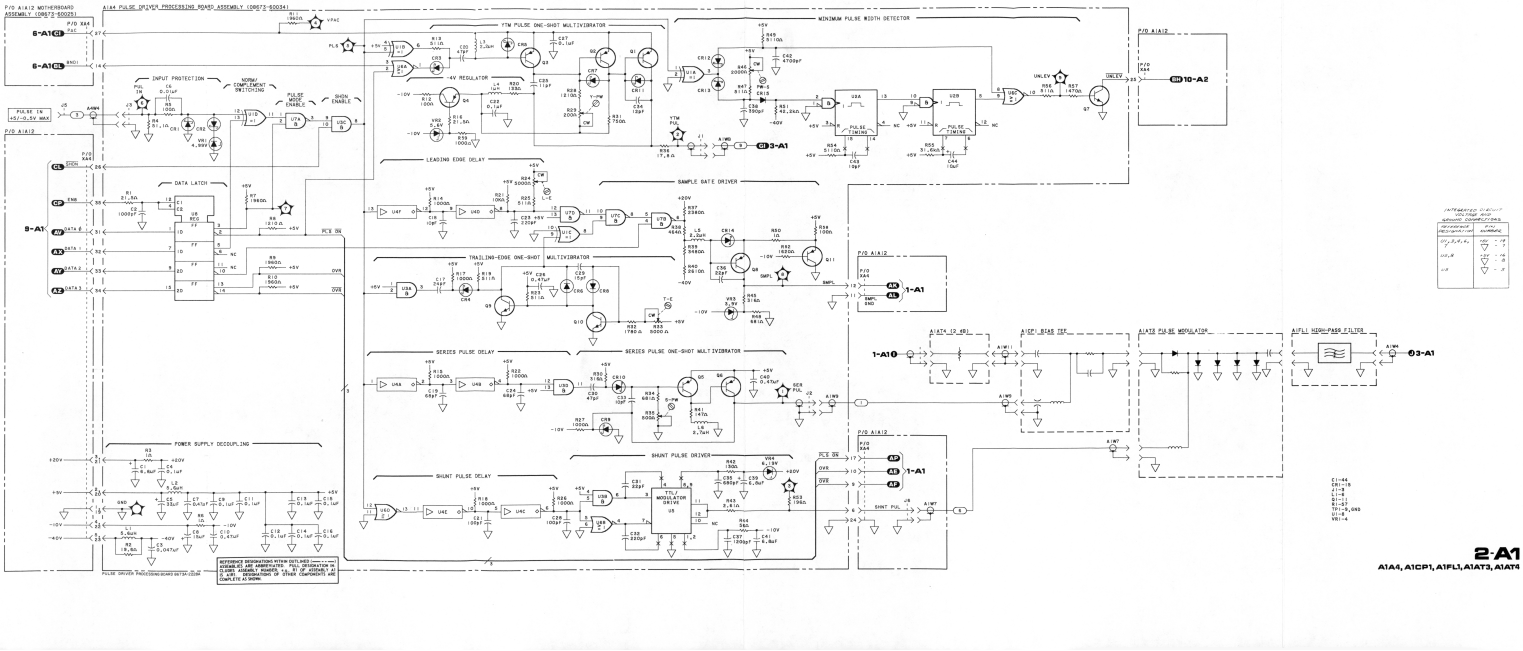

2-A1

A1A4, A1CP1, A1FL1, A1AT3, A1AT4

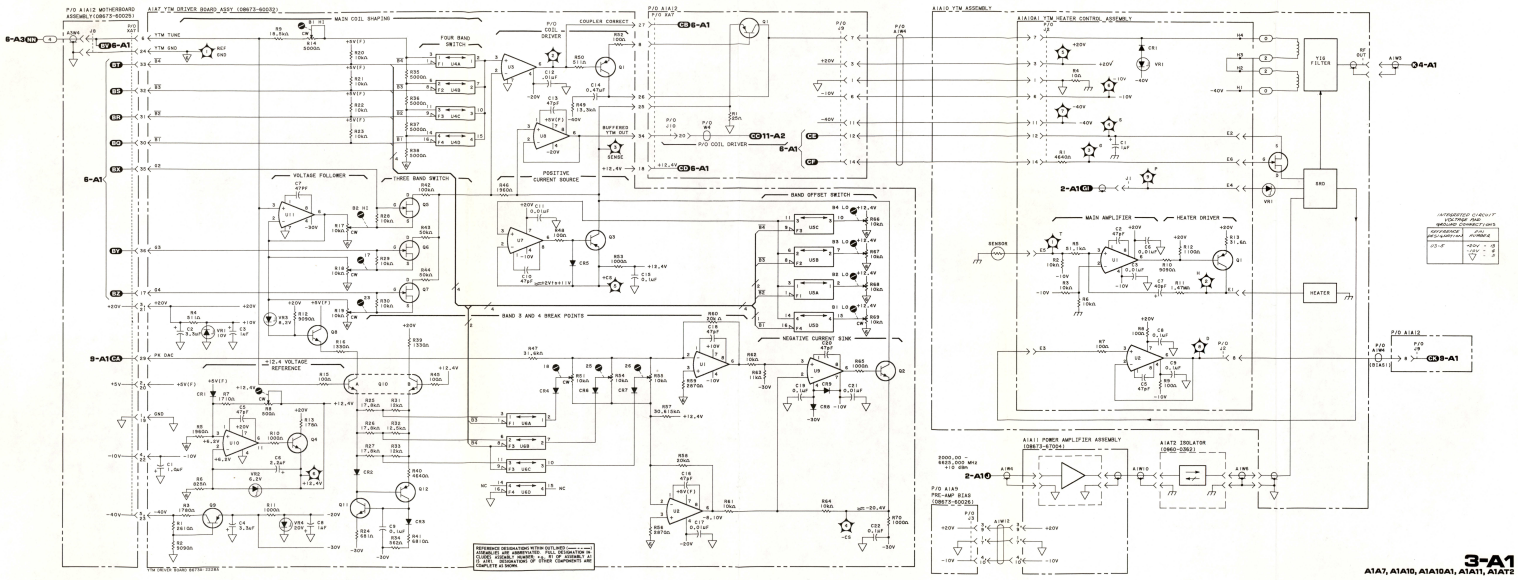

3-A1

A1A7, A1A10, A1A10A1, A1A11, A1A12

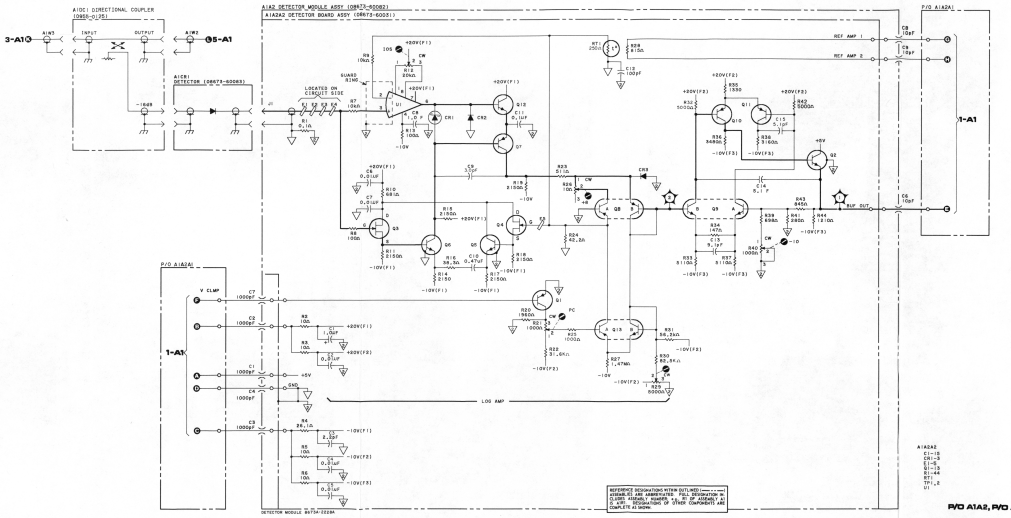

4-A1

P/O A1A2, P/O A1A2A1, A1A2A2, A1CR1, A1DC1

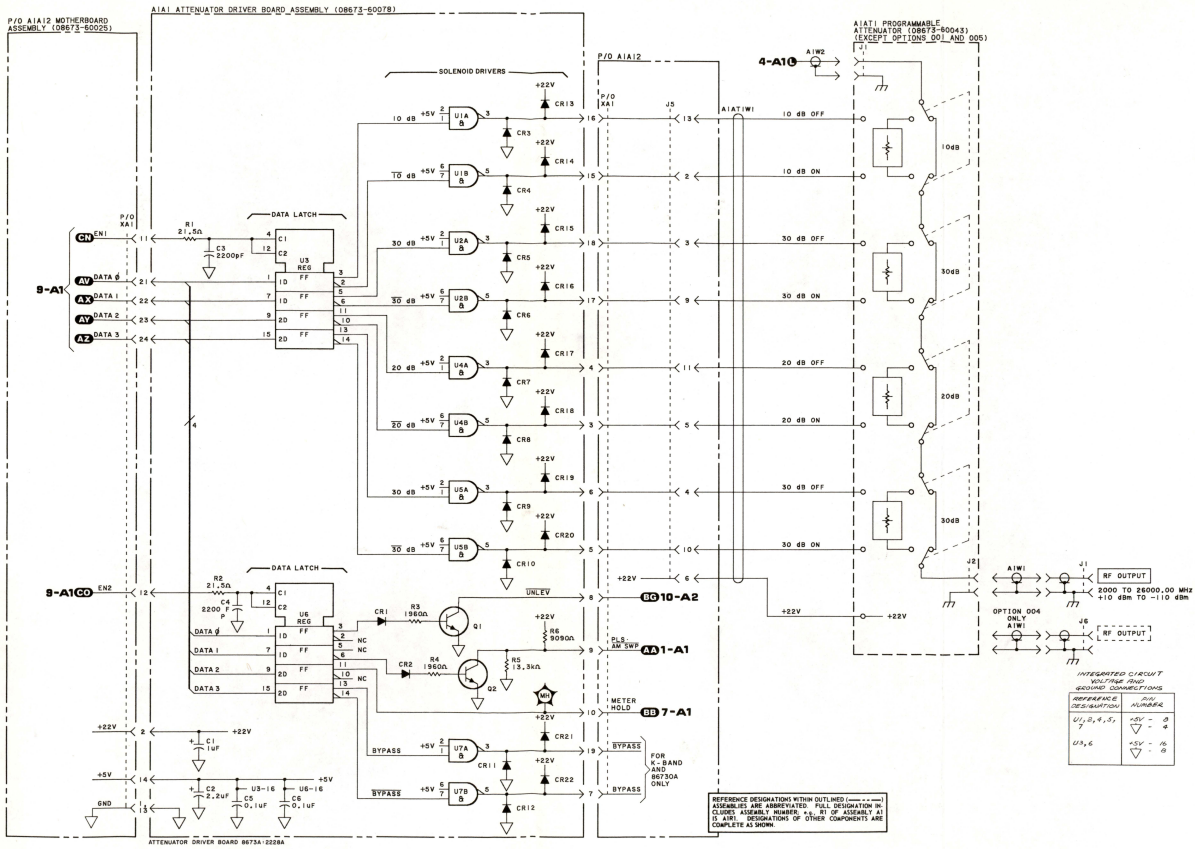

C1-6
CR1-22
R1-6
Q1,2
U1-7

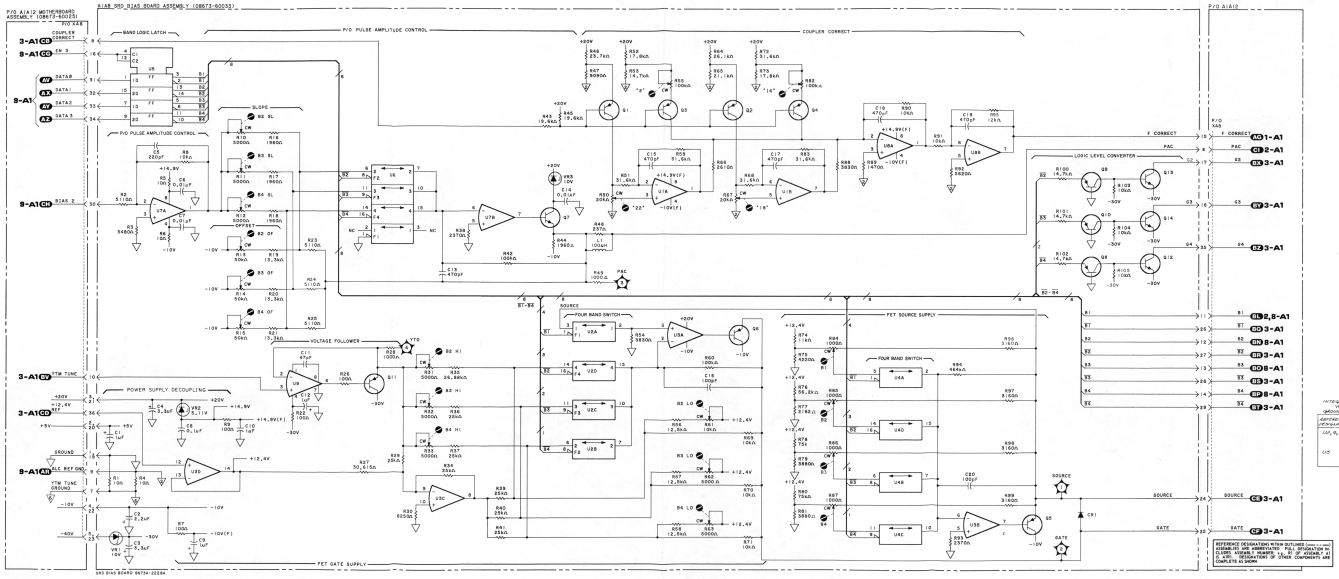
P/O A1A12 MOTHERBOARD ASSEMBLY (08673-60013)
A1A8 OSC DIAS BOARD ASSEMBLY (08673-60053)
P/O A1A12
P/O A1A8
P/O PULSE AMPLITUDE CONTROL
COUPLER CORRECT
BAND LOGIC LATCH
SLOPE
LOGIC LEVEL CONVERTER
FOUR BAND SWITCH
FET SOURCE SUPPLY
VOLTAGE FOLLOWER
POWER SUPPLY DECOUPLING
FET GATE SUPPLY
F CORRECT
PAC
SOURCE
GATE
INTEGRATED CIRCUITS VOLTAGE AND WAVEFORM CONDITIONS
REFERENCE DESIGNATIONS WITH OUTLINED ASSEMBLIES AND ABBREVIATIONS. FULL EXPLANATION IN CLOSED ASSEMBLY NUMBER 1, P/O OF ASSEMBLY 21 OR 22 MAY BE FOUND AT BEGINNING OF OTHER COMPONENTS ARE COMPLETE ASSEMBLY.
6-A1
A1A8

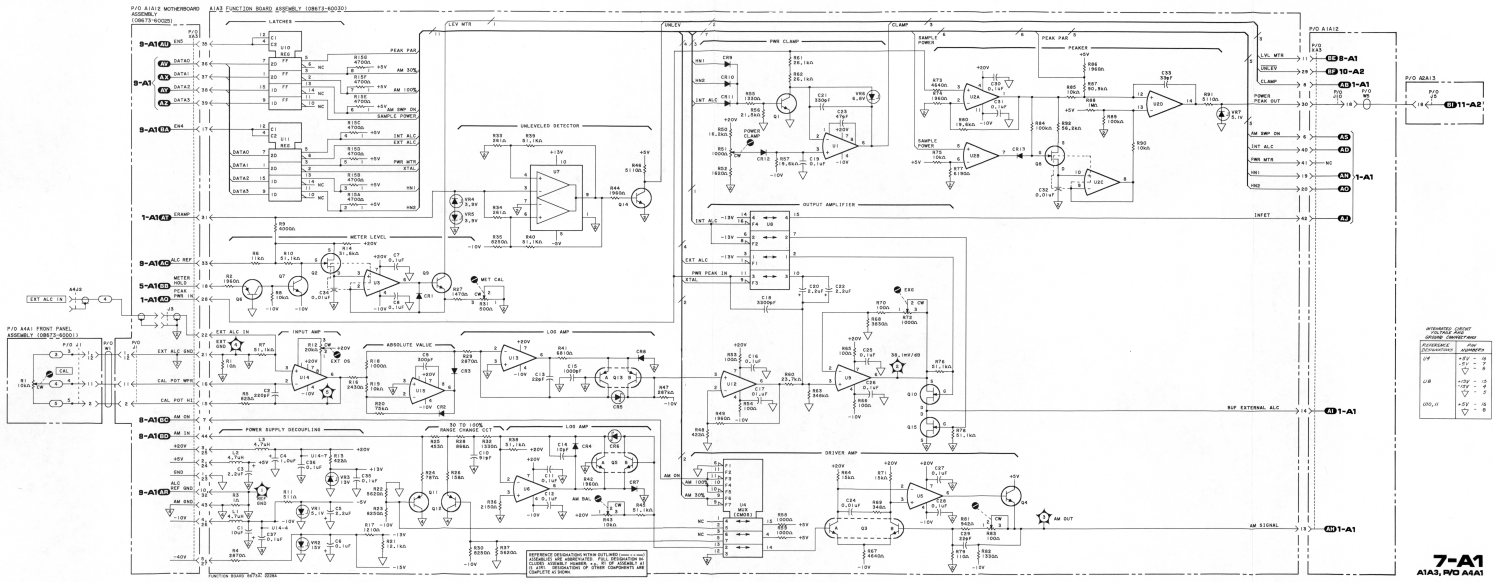
P/O A1A12 MOTHERBOARD ASSEMBLY (08673-60025)
A1A3 FUNCTION BOARD ASSEMBLY (08673-60030)
LATCHES
PEAK PAD
AM 30%
AM 100%
AM SMP ON
SAMPLE POWER
INT ALC
EXT ALC
PWR MTR
XTAL
VAR
VAR2
LEV MTR
UNLEV
CLAMP
UNLEVELED DETECTOR
METER LEVEL
METER HOLD
PEAK PWR IN
ALC REF
EXT ALC IN
INPUT AMP
ABSOLUTE VALUE
LOG AMP
POWER SUPPLY DECOUPLING
50 TO 100% PANIC CIRCUIT
PWR CLAMP
SAMPLE POWER
PEAKER
PEAK PAD
OUTPUT AMPLIFIER
DRIVER AMP
AM DAC
AM OUT
AM SIGNAL
INFET
BUF EXTERNAL ALC
P/O A1A12
P/O A1A13
P/O A4A1 FRONT PANEL ASSEMBLY (08673-60001)
EXT ALC GND
CAL POT MPC
CAL POT HIC
AM GND
AM IN
ALC REF GND
GND
REFERENCE DESIGNATIONS WITHIN OUTLINED (dash) LINE ASSEMBLY ARE PREFIXED BY ASSEMBLY NUMBER (EXAMPLE: A1 PRECEDES ASSEMBLY A1 U NAME). DESIGNATIONS OF OTHER COMPONENTS ARE COMPLETE AS SHOWN.
INTEGRATED CIRCUIT POWER AND GROUND CONNECTIONS
7-A1
A1A3, P/O A4A1

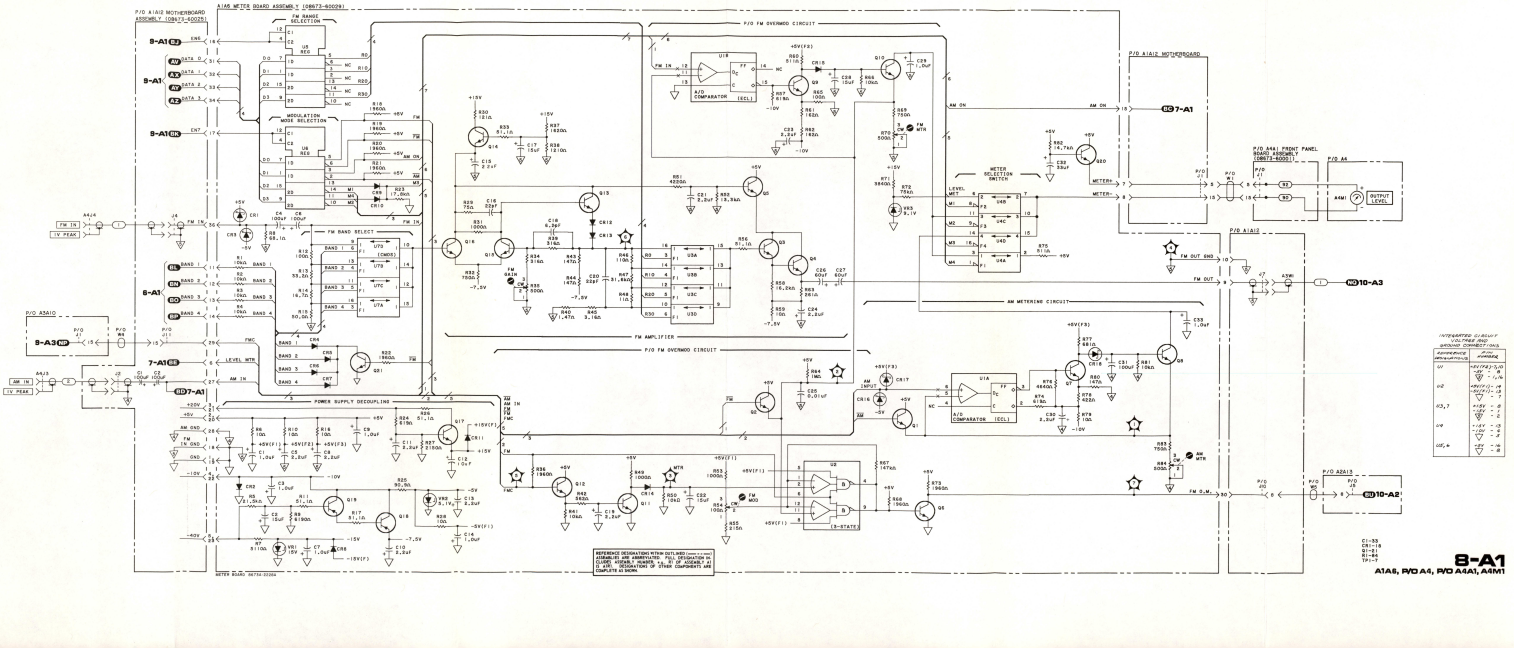
A1A6 MTR6 BOARD ASSEMBLY (08673-60029)
P/O A1A12 MOTHERBOARD ASSEMBLY (08673-60025)
FM BAND SELECTION
MODULATION MODE SELECTION
FM BAND SELECT
POWER SUPPLY DECOUPLING
P/O FM OVERMOD CIRCUIT
FM AMPLIFIER
AM METERING CIRCUIT
A/D COMPARATOR (ECL)
METER SELECTION SWITCH
P/O A4A1 FRONT PANEL BOARD ASSEMBLY (08673-60051)
P/O A4
P/O A1A12
P/O A2A13
P/O A2A10
P/O A3A10
8-A1
A1A6, P/O A4, P/O A4A1, A4M1

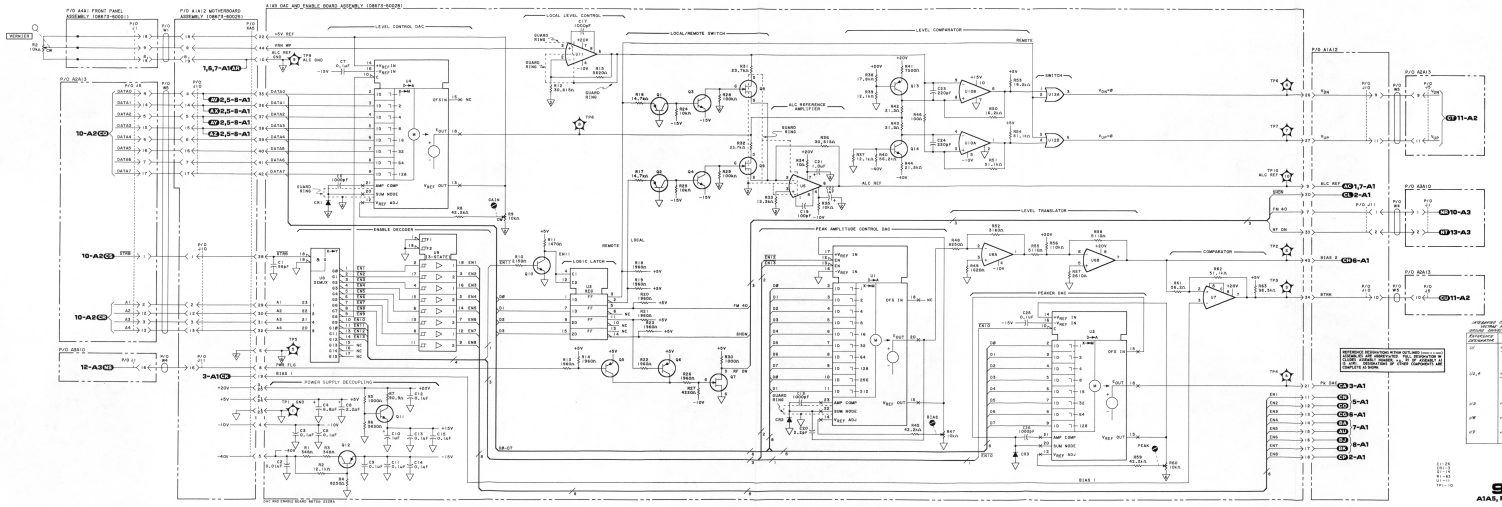

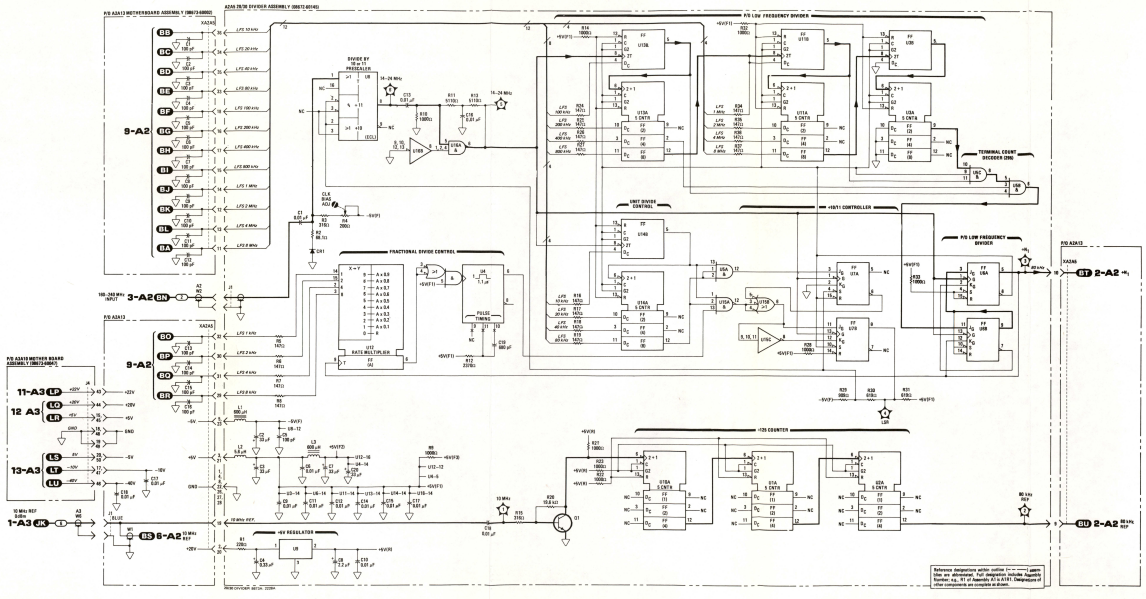

REFERENCE DESIGNATIONS	
A2	A2A13
MC	J1–10
A2A5	J2
	MC
C1–20	XA2A5
CR1	A3
CH1	
L1–3	MC
Q1	
R1–27	A2A15
U1–4	
U7–10	JK

LOGIC LEVELS				
LOGIC	TTL	ECL	ECL	CMOS
HIGH (1)	>2V	>–0.5V	>–0.7V	>+2V
LOW (0)	<0.5V	<–1.5V	<–2.0V	<0.1V
<= EQUAL TO OR MORE NEGATIVE THAN				
>= EQUAL TO OR MORE POSITIVE THAN				
INPUT	TTL	ECL	ECL	CMOS
DRIVE	HIGH (1)	HIGH (1)	LOW (0)	LOW OR
OPEN	HIGH (1)	LOW (0)	LOW OR	X
GROUND = 0V, X = UNSPECIFIED				

TRANSISTOR AND INTEGRATED CIRCUIT PART NUMBERS	
REFERENCE DESIGNATIONS	PART NUMBER
Q1	1854–0018
U1–3, 10, 11	1820–1201
U4	1820–0991
U5	1820–0989
U6, 7	1820–0829
U8	1820–0826
U9	1820–0425
U12	1820–0990
U13, 14	1820–0711
U15	1820–0995
U16	1820–0996

INTEGRATED CIRCUIT VOLTAGE AND GROUND CONNECTIONS	
REFERENCE DESIGNATIONS	PIN NUMBERS
U1, 2, 10	+5V(R) 14
	▽ 7
U3, 9, 11, 13–16	+5V(F1) 14
	▽ 7
U4	+5V(F2) 14
	▽ 7
U6, 7	+5V(F3) 16
	▽ 8
U8	–5V(F) 12
	▽ 5
U12	+5V(F2) 16
	+5V(F3) 12
	▽ 8

Reference designations within outline (– – – –) are abbreviated. Full designation includes Assembly Number, e.g., R1 of Assembly A7 is A7R1. Designations of other components are complete as shown.

08672-90009 A07/24 2229H

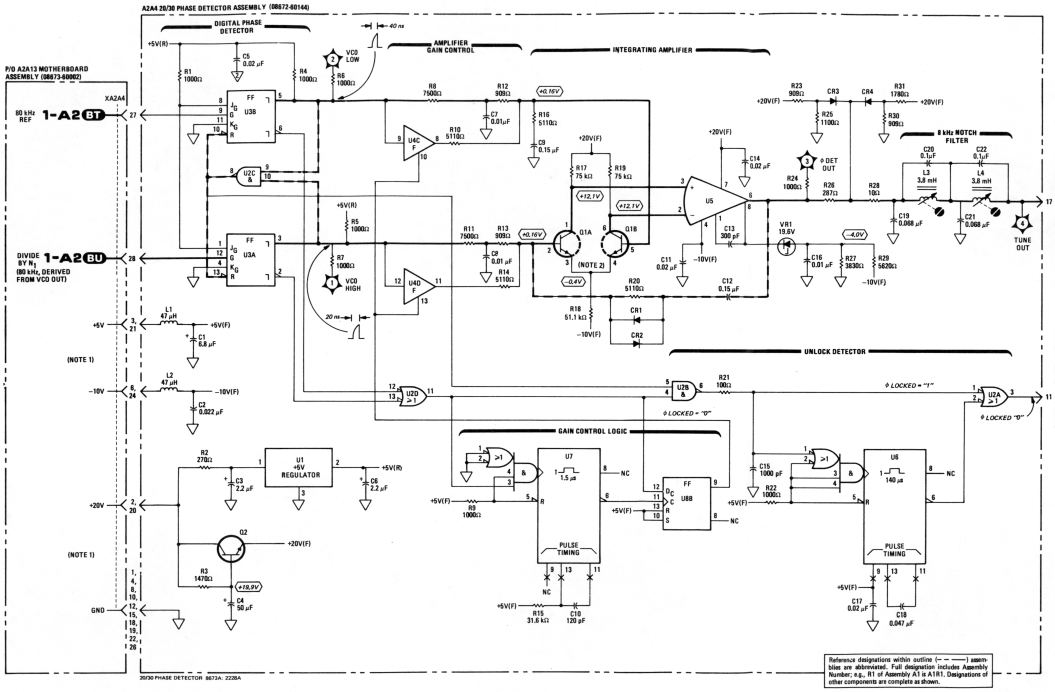

NOTES

1. POWER SUPPLY CONNECTIONS TO THE A2 ASSEMBLY ARE SHOWN ON SERVICE SHEET 1-A2.
2. REFER TO THE FOLLOWING DIAGRAM FOR PIN LOCATIONS.

TOP VIEW

REFERENCE DESIGNATIONS

A2A4	A2A13
C1–22 CR1–4 L1–4 Q1–2 R1–31 TP1–4 U1–8 VR1	XA2A4

LOGIC LEVELS

LOGIC	TTL	ECL	EECL	CMOS
HIGH (1)	>2V	>–0.5V	>–0.1V	≈VDD
LOW (0)	<0.8V	<–1.5V	<–0.8V	≈0.1V
<– EQUAL TO OR MORE NEGATIVE THAN >– EQUAL TO OR MORE POSITIVE THAN				
INPUT	TTL	ECL	EECL	CMOS
GROUND	LOW (0)	HIGH (1)	HIGH (1)	LOW (0)
OPEN	HIGH (1)	LOW (0)	LOW (0)	X
GROUND – 0V; X = UNDEFINED				

TRANSISTOR AND INTEGRATED CIRCUIT PART NUMBERS

REFERENCE DESIGNATIONS	PART NUMBERS
Q1	1854-0475
Q2	1854-0071
U1	1820-0429
U2	1820-1197
U3	1820-0281
U4	1820-0846
U5	1826-0352
U6–7	1826-1422
U8	1826-1112

INTEGRATED CIRCUIT VOLTAGE AND GROUND CONNECTIONS

REFERENCE DESIGNATIONS	PIN NUMBERS
U2, 3	+5V(R) – 14
	▽ – 7
U4, 8	+5V(F) – 14
	▽ – 7
U6, 7	+5V(F) – 16
	▽ – 7

2-A2
A2A4

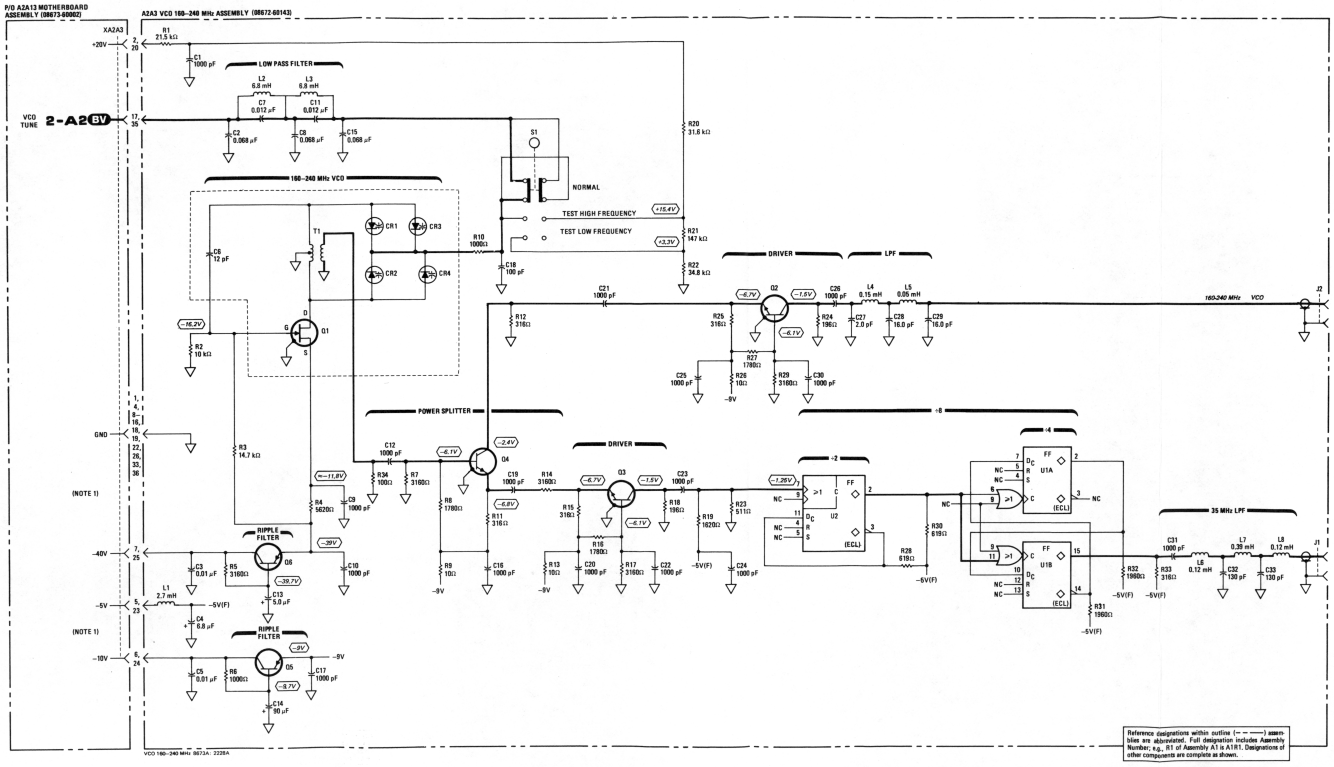

NOTES

1. POWER SUPPLY CONNECTIONS TO THE A2 ASSEMBLY ARE SHOWN ON SERVICE SHEET 1-A2.

REFERENCE DESIGNATIONS

A2	A2A3
W2	C1–33
	CR1–4
A2A13	J1, 2
	L1–8
XA2A3	Q1–6
	R1–34
A3	S1
	T1
W14	U1, 2

LOGIC LEVELS

LOGIC	TTL	ECL	EECL	CMOS
HIGH (1)	≥2V	≥–0.5V	≥–0.1V	≈VDD
LOW (0)	≤0.8V	≤–1.5V	≤–0.8V	≤0.1V
< = EQUAL TO OR MORE NEGATIVE THAN				
> = EQUAL TO OR MORE POSITIVE THAN				
INPUT	TTL	ECL	EECL	CMOS
GROUND	LOW(0)	HIGH(1)	HIGH (1)	LOW (0)
OPEN	HIGH (1)	LOW (0)	LOW (0)	X
GROUND = 0V; X = UNDEFINED				

TRANSISTOR AND INTEGRATED CIRCUIT PART NUMBERS

REFERENCE DESIGNATIONS	PART NUMBERS
Q1	1855-0392
Q2–4	1854-0345
Q5	1853-0020
Q6	1853-0451
U1	1820-1225
U2	1820-0794

INTEGRATED CIRCUIT VOLTAGE AND GROUND CONNECTIONS

REFERENCE DESIGNATIONS	PIN NUMBERS
U1, 2	–5V(F) – 8
	▽ – 1,16

3-A2
A2A3

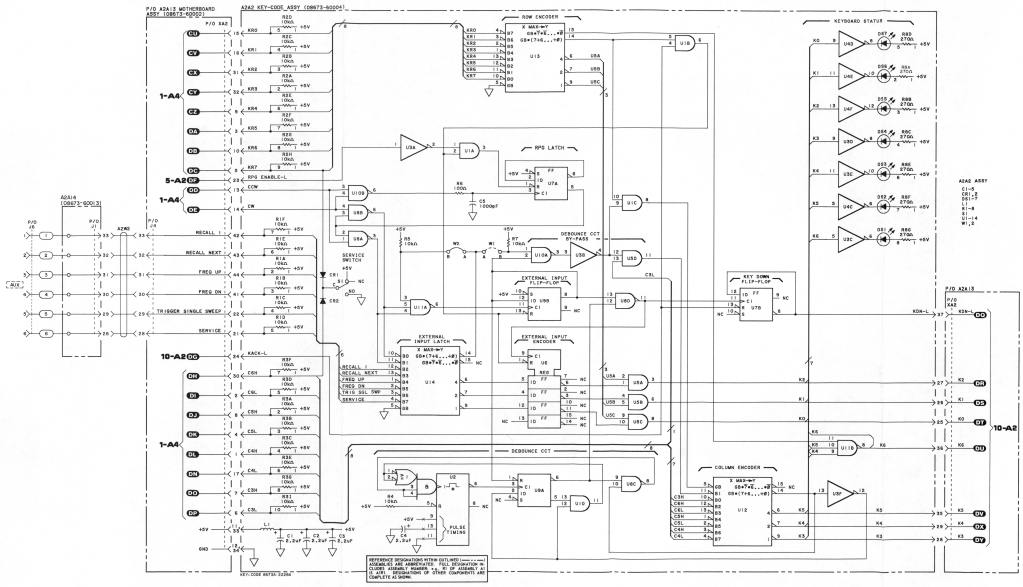
A2A2 KEY-CODE ASSY (08673-60004)
P/O A2A15 MOTHERBOARD ASSY (08673-60002)
P/O A2A5
ROW ENCODER
KEYBOARD STATUS
RPG LATCH
DEBOUNCE CCT BY-PASS
EXTERNAL INPUT FLIP-FLOP
EXTERNAL INPUT LATCH
EXTERNAL INPUT DECODER
KEY DOWN FLIP-FLOP
DEBOUNCE CCT
COLUMN ENCODER
SERVICE SWITCH
PULSE TIMING
RECALL
RECALL NEXT
FREQ UP
FREQ DN
TRIGGER SINGLE SWEEP
SERVICE
RPG ENABLE-L
CCW
CW
KACK-L
KDN-L
A2A5 (08673-60013)
A2A2 ASSY
P/O A2A15
1-A4
5-A2
10-A2
4-A2
A2A2, P/O A2A14

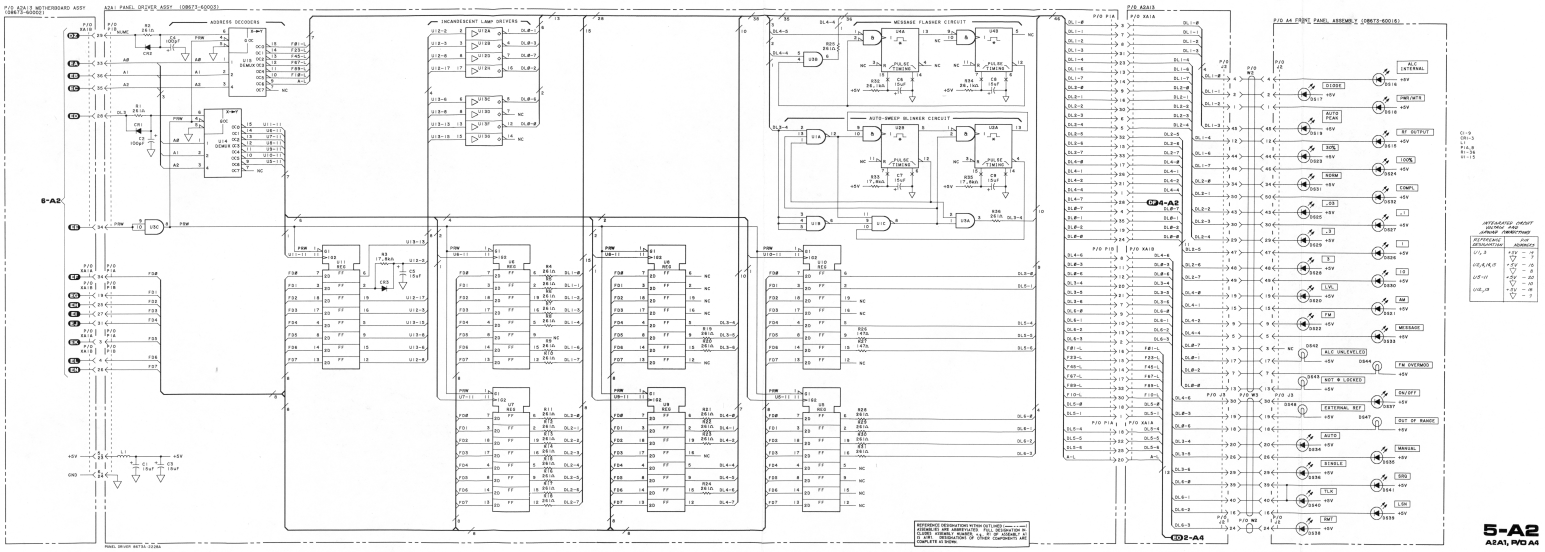
A2A1 PANEL DRIVER ASSY (08673-60003)
ADDRESS DECODERS
INCANDESCENT LAMP DRIVERS
MESSAGE FLASHER CIRCUIT
AUTO-SWEEP BLANKER CIRCUIT
P/O A2A15
P/O A4 FRONT PANEL ASSEMBLY (08673-60016)
DIODE
AUTO PEAK
ALC INTERNAL
PWR/WFR
RF OUTPUT
MOD
LOCK
NORM
COMPL
.05
.1
.3
.5
1
LVL
AM
FM
MESSAGE
ALC UNLEVELED
FM OVERMOD
EXT REF LOCKED
EN/DFT
EXTERNAL REF
OUT OF RANGE
AUTO
MANUAL
SINGLE
SRQ
TLK
LSN
RMT
INTEGRATED CIRCUIT VOLTAGE AND CURRENT TABULATIONS
REFERENCE DESIGNATION
SUM
ADDRESS
6-A2
5-A2
A2A1, P/O A4

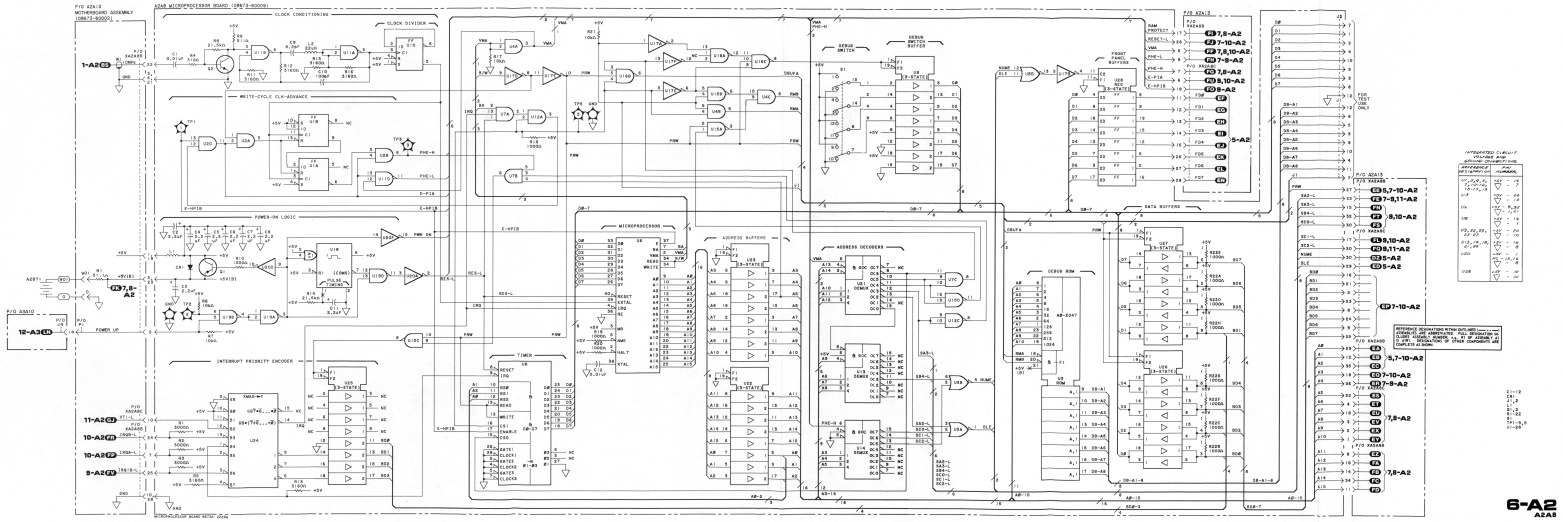

6-A2
A2A8

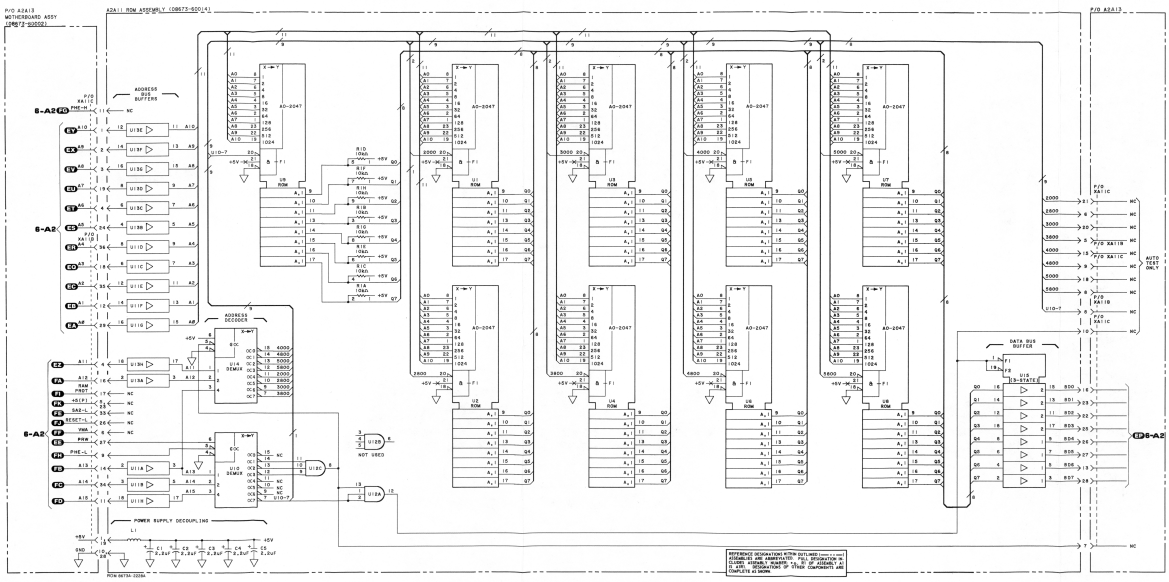

NOTES

1. SEE TABLE 8- FOR SCHEMATIC DIAGRAM NOTES.

REFERENCE DESIGNATIONS	
A2A11	
C1-5	XA2A11A-C
R1	
U1-18	

INTEGRATED CIRCUIT VOLTAGE AND SIGNAL ANALYSIS CHART		
REFERENCE DESIGNATOR	PIN NUMBER	
U1-8	+5V	- 20
	GND	- 10
U9-16	+5V	- 16
	GND	- 8
U17,18	+5V	- 20
	GND	- 10
U12	+5V	- 14
	GND	- 7

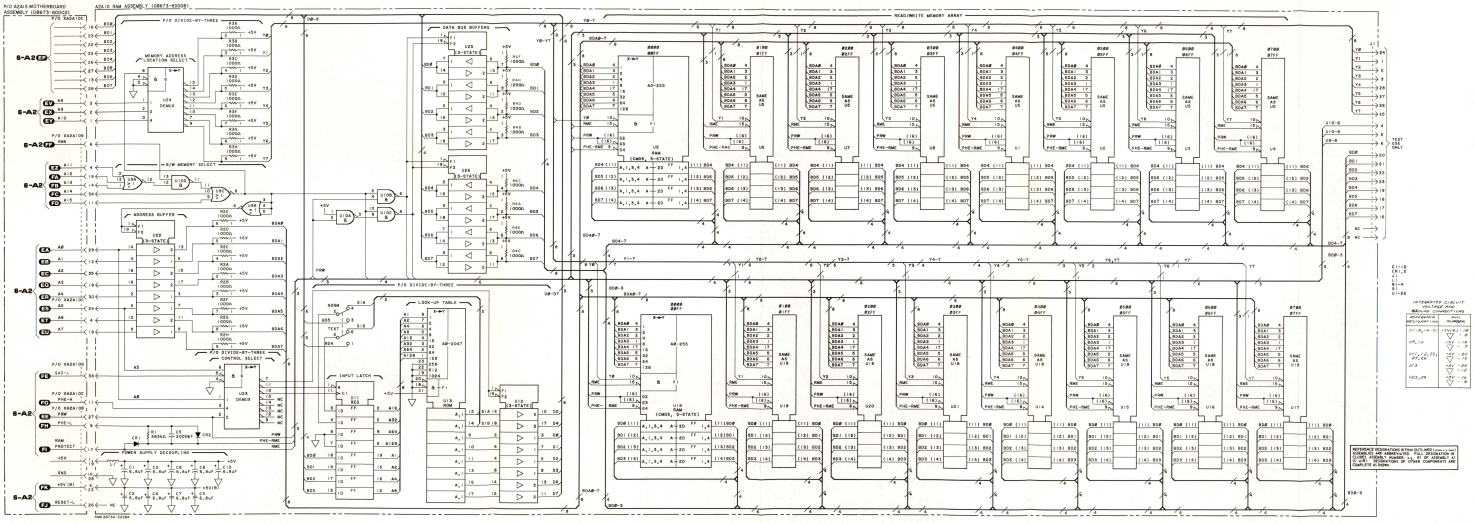

8-A2
A2A1D

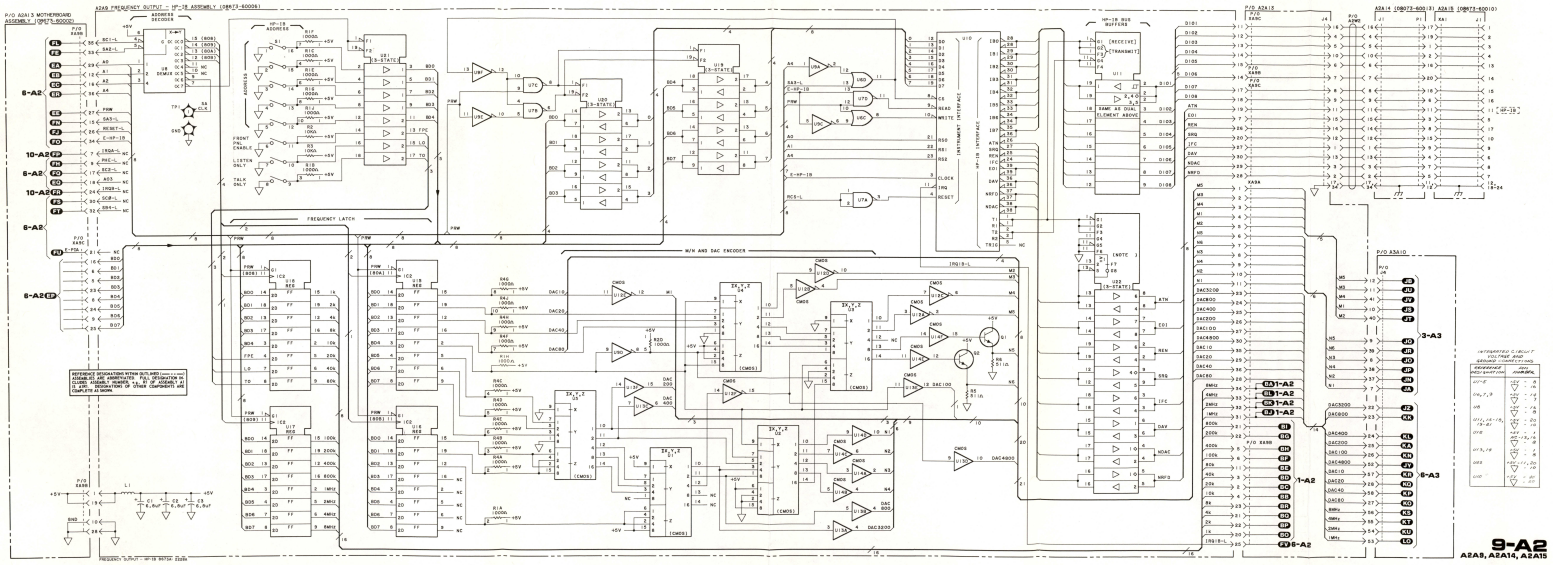
A2A9 FREQUENCY OUTPUT – HP-IB ASSEMBLY (08673-60008)
P/O A2A13 MOTHERBOARD ASSEMBLY (08673-60002)
ADDRESS DECODER
HP-IB ADDRESS
FREQUENCY LATCH
W/N AND DAC ENCODER
HP-IB INTERFACE
HP-IB BUS BUFFERS
P/O A2A15 XASC
P/O A2A14 XAMC
A2A14 (08673-60013) A2A15 (08673-60010)
P/O A2A10 XASA
P/O A2A10 XASB
P/O A2A10 XASD
INTEGRATED CIRCUIT VOLTAGE AND GROUND CONNECTIONS
REFERENCE DESIGNATIONS WITHIN BLOCKS
9-A2
A2A9, A2A14, A2A15

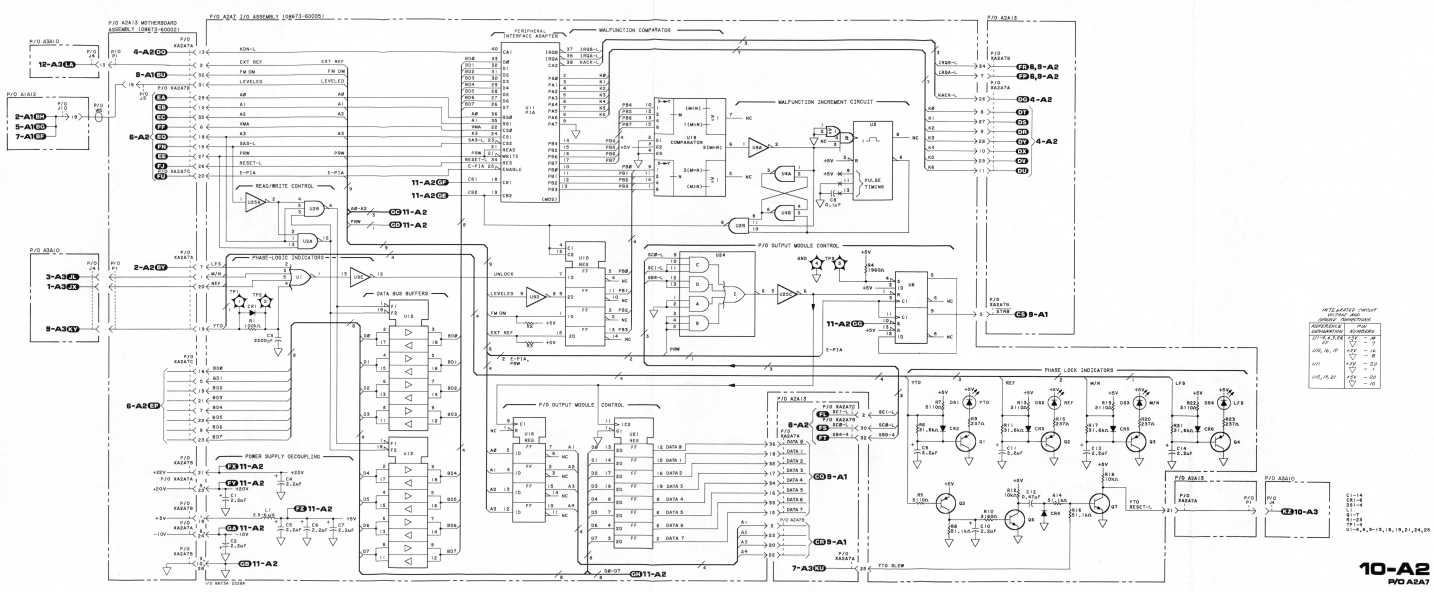
P/O A2A1 I/O ASSEMBLY (08873-60005)
P/O A2A13 MOTHERBOARD ASSEMBLY (08873-60002)
PERIPHERAL INTERFACE ADAPTER
MALFUNCTION COMPARATOR
MALFUNCTION INCREMENT CIRCUIT
READ/WRITE CONTROL
PHASE-LOCK INDICATORS
DATA BUS BUFFERS
P/O OUTPUT MODULE CONTROL
POWER SUPPLY DECOUPLING
P/O A2A18
P/O A2A10
P/O A2A11
P/O A2A12
P/O A2A14
P/O A2A15
P/O A2A16
P/O A2A17
P/O A2A9
P/O A2A8
P/O A2A7
P/O A2A6
P/O A2A5
P/O A2A4
P/O A2A3
P/O A2A2
INTEGRATED CIRCUIT VOLTAGE AND GROUND FUNCTIONS
REFERENCE DESIGNATION
SUPPLY VOLTAGE
GROUND
+5V
-10V
+12V
+22V
-22V
TP1 thru TP4, 8, 9-13, 16, 19, 21, 24, 25
U1 thru U4, 8, 9-13, 16, 19, 21, 24, 25
10-A2
P/O A2A7

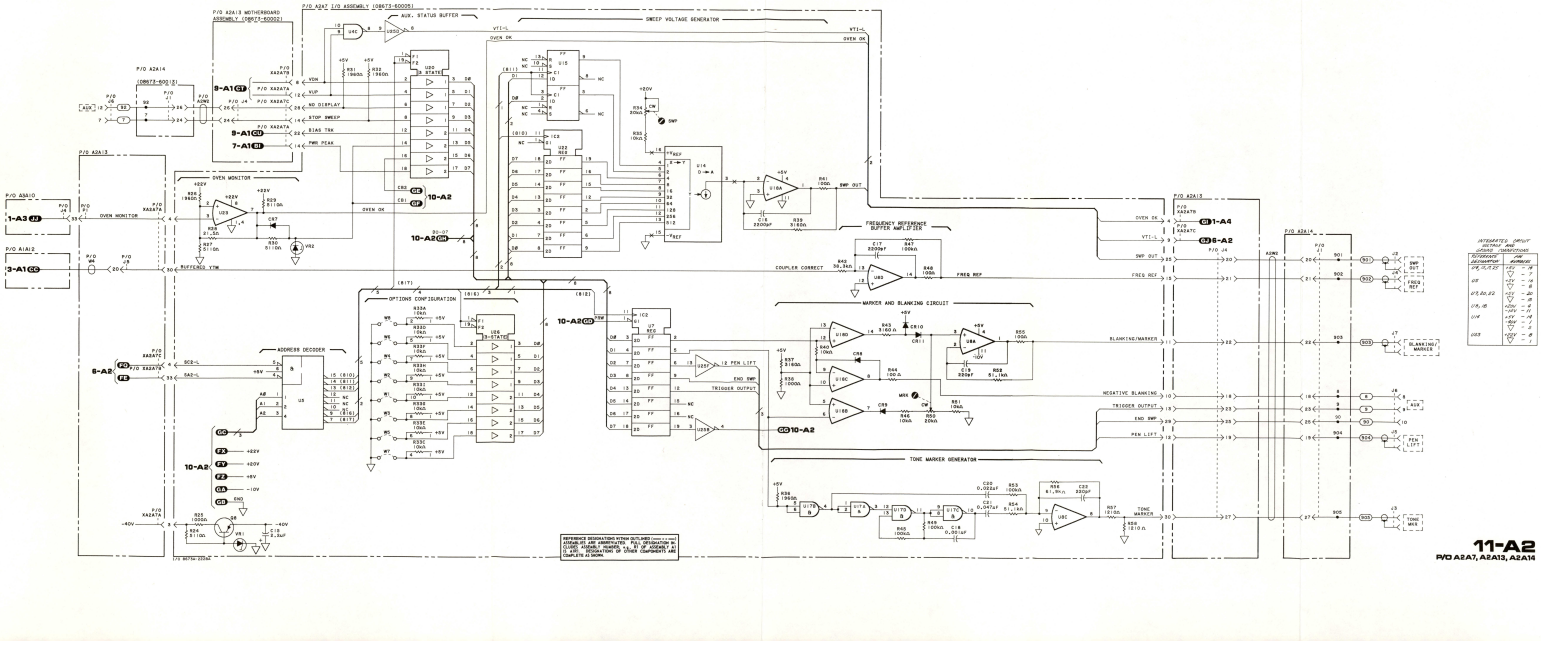

REFERENCE DESIGNATIONS WITHIN OUTLINED (heavy or red) BORDERS ARE WAFER-ITEM P/O ASSEMBLY AS CLOSE ASSEMBLY NUMBER. I.E. P/O OF ASSEMBLY A1 MEANS THAT INTERCONNECTION OF OTHER COMPONENTS ARE COMPLETE AS SHOWN.

INTEGRATED CIRCUIT DETAIL AND POWER CONNECTIONS

POWER DESCRIPTION	PIN NUMBER
+5V, +5.2V	+5V — 19
	▽ — 1
GND	+5V — 14
	▽ — 7
+7.5, +8.2	+5V — 20
	▽ — 10
+15, -15	+20V — 8
	-20V — 1
-5.2V	+5V — 14
	-15V — 7
GND	-5.2V — 8
	GND — 7

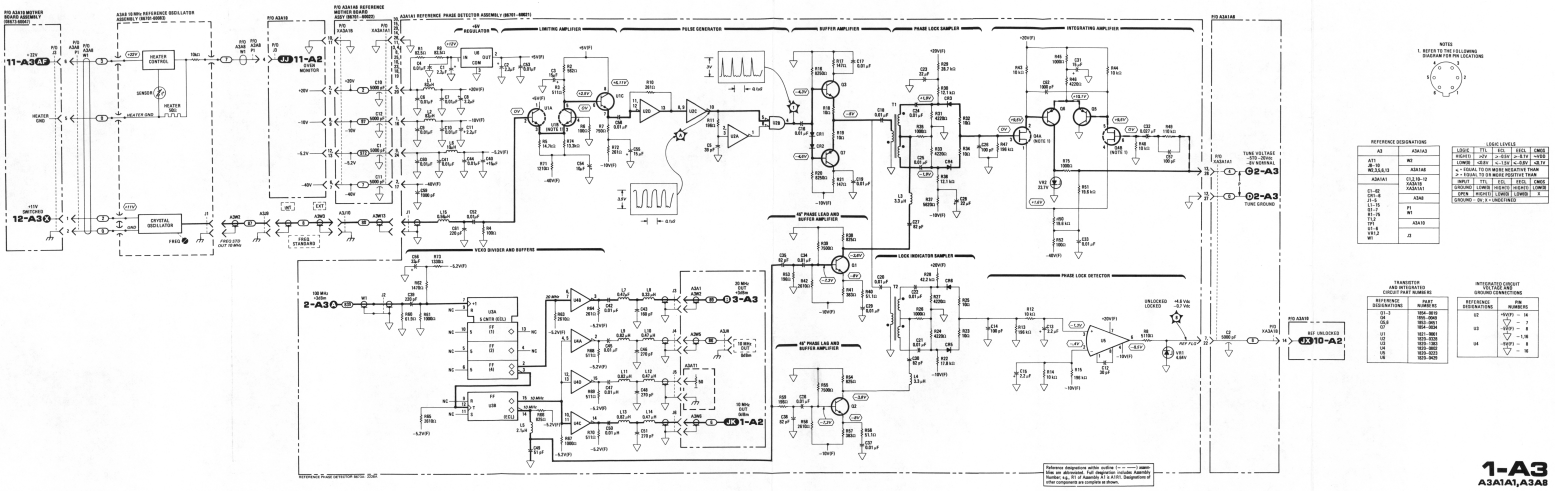

1-A3
A3A1A1,A3A8

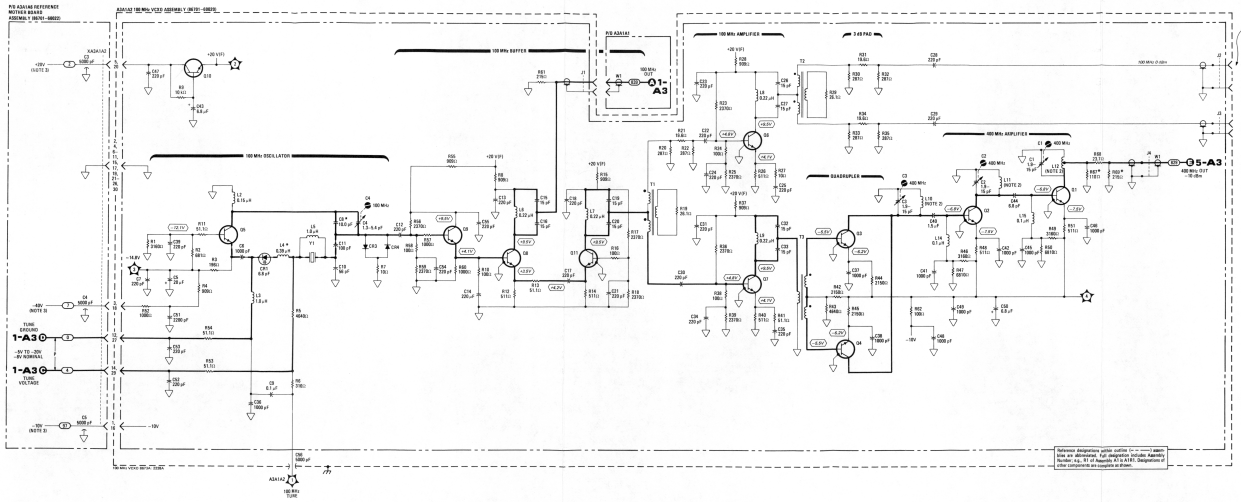
A3A1A2 100 MHz VCXO ASSEMBLY (5672-0882)
100 MHz BUFFER
100 MHz AMPLIFIER
2-49 PAD
100 MHz OSCILLATOR
QUADRUPLER
400 MHz AMPLIFIER
100 MHz OUT
A3A1A1
A3A1A2
A3A1A6
A3A1
A3A2
A3A7
J1
J2
J3
J4
J5
J6
J7
J8
J9
J10
J11
J12
J13
J14
J15
J16
J17
J18
J19
J20
J21
J22
J23
J24
J25
J26
J27
J28
J29
J30
J31
J32
J33
J34
J35
J36
J37
J38
J39
J40

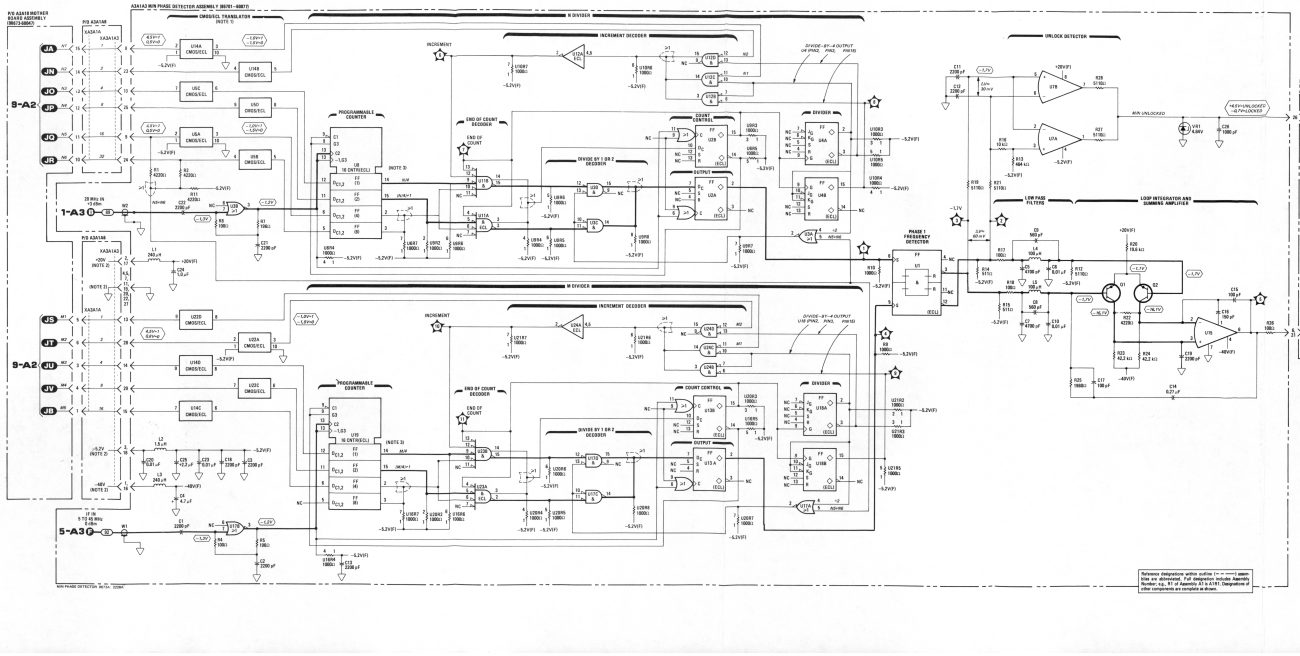
A3A1A3 MIN PHASE DETECTOR ASSEMBLY (80701-60003)
P/O A3A1B MOTHER BOARD ASSEMBLY (80672-60063)
P/O A3A1B
CMOS/ECL TRANSLATOR (NOTE 1)
N DIVIDER
INCREMENT DECODER
PROGRAMMABLE COUNTER
END OF COUNT DECODER
DIVIDE BY 1 OR 2 DECODER
COUNT CONTROL
OUTPUT REGS
DIVIDER
UNLOCK DETECTOR
LOW PASS FILTERS
LOOP INTEGRATOR AND SUMMING AMPLIFIER
PHASE I FREQUENCY DETECTOR
P/O A3A1A6 REFERENCE BOARD ASSEMBLY (80701-60022)
P/O A3A1B
MIN UNLOCKED
MIN UNLOCKED
5-A3
8-A2
1-A3
JA
JN
JO
JP
JR
JS
JT
JU
JV
JH
J10-A2
NOTES
1. U5,14,22 ARE SINGULAR LINE RESISTOR PACKAGES, SCHEMATIC AS SHOWN (1810-0251).
2. POWER SUPPLY CONNECTIONS TO THE A3A1 ASSEMBLY ARE SHOWN ON SCHEDULE SHEET 1-A3.
3. PINS 4,7,10 OF U8 AND U18 ARE NOT SHOWN.
REFERENCE DESIGNATIONS
A3A1A6 | A3A1A8
C1-26 | A3A1A1
L1-3 | A3A1A2
U1,2 | A3A1A3
P1,2,4,5 | A3A1A4
T1-26 | A3A1A5
TP1-3 | A3A1A6
U1-34 | A3A1A7
VR1 | A3A1A8
W1,2
LOGIC LEVELS
LOGIC | TTL | ECL | CMOS
HIGH(1) | +2V | -0.8V | +10V
LOWER | +0.8V | <-1.5V | <0.5V
+ = EQUAL TO OR MORE NEGATIVE THAN
- = EQUAL TO OR MORE POSITIVE THAN
INPUT | TTL | ECL | CMOS
GROUND | LOWER | HIGH(1) | LOWER
OPEN | HIGH(1) | LOWER | X
GROUND = 0V, X = UNDEFINED
TRANSISTOR AND INTEGRATED CIRCUIT PART NUMBERS
REFERENCE DESIGNATIONS | PART NUMBERS
Q1,2 | 1853-0461
U1 | 1820-1344
U2,12 | 1820-1335
U3,4,17,24 | 1820-0900
U5,14 | 1820-0902
U6,14,22 | 1810-0251
U8,9,15,16 | 1820-0256
20,21
U7,10 | 1820-0892
U8,18 | 1820-0621
U11,23 | 1820-0898
U13 | 1820-0900
INTEGRATED CIRCUIT GROUND CONNECTIONS
REFERENCE DESIGNATIONS | PIN NUMBERS
U1 | -5.2V(F) = 7
= 1,14
-5.2V(F) = 8
U2-4,8,11-13, 17-19,23,24 | =
-5.2V(F) = 1
U5,14,22 | = 10
Reference designations within outline (— — —) assemble are abbreviated. Full designation includes Assembly Number; e.g., R1 of Assembly A1 is A1R1. Designation of other components are complete as shown.
3-A3
A3A1A3

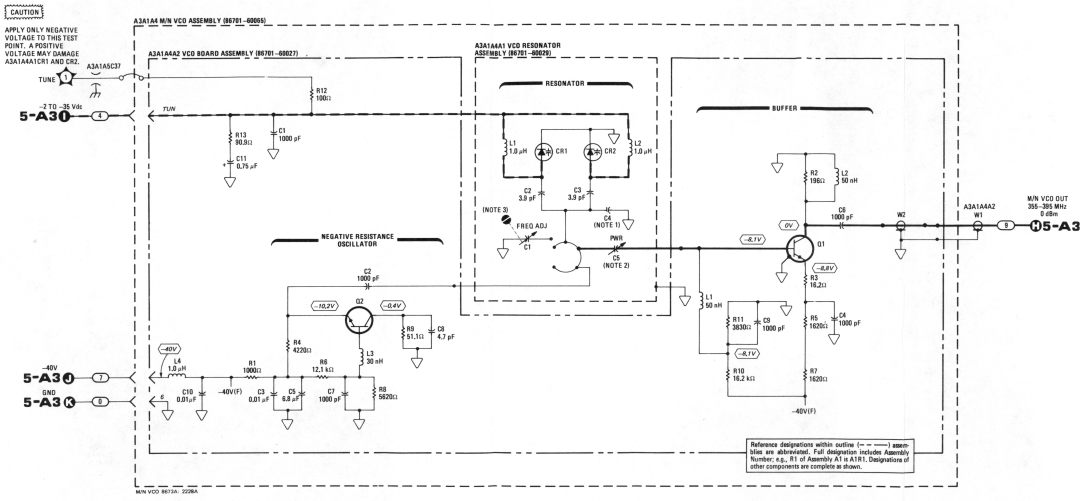

NOTES

1. A3A1A4A1C4 IS AN AIR DIELECTRIC CAPACITOR FORMED BY RESONATOR HOUSING AND RESONATOR CENTER CONDUCTOR.
2. PWR ADJUSTMENT IS AN ADJUSTABLE PROBE MOUNTED ON A3A1A4A2 AND EXTENDING INTO THE VCO RESONATOR ASSEMBLY.
3. ADJUSTMENT SCREW LOCATED ON COVER OF M/N OUTPUT ASSEMBLY A3A1A5.

REFERENCE DESIGNATIONS

A3A1A4A1	A3A1A4A2
C1–5 CR1,2 L1,2	C1–11 L1–4 Q1,2 R1–13 TP1 W1,2
A3A1A5	
C37	

TRANSISTOR PART NUMBERS

REFERENCE DESIGNATIONS	PART NUMBERS
Q1	1854–0610
Q2	1854–0686

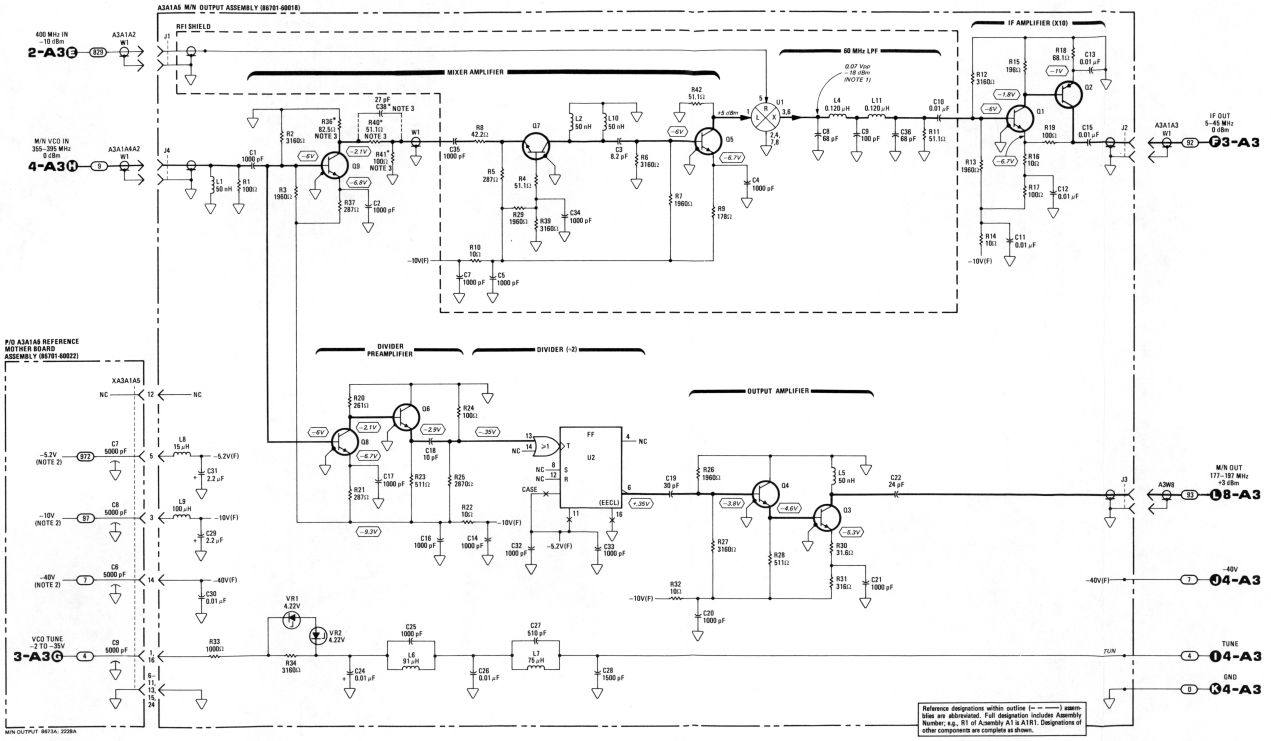

NOTES

1. MEASURED WITH SPECTRUM ANALYZER HIGH IMPEDANCE PROBE.
2. POWER SUPPLY CONNECTIONS TO THE A3A1 ASSEMBLY ARE SHOWN ON SERVICE SHEET 1–A3.
3. ASTERISK (*) INDICATES SELECTED COMPONENTS. NOMINAL VALUE SHOWN. EITHER R40 OR C38 WILL BE USED IN ANY INSTRUMENT. SELECTION IS COVERED IN SECTION V.

REFERENCE DESIGNATIONS

A3	A3A1A5
W8	C1–5,7–22, 24–36,38
A3A1A2	J1–4
W1	L1,2,4–11
A3A1A3	Q1–9
W1	R1–34,36, 37,39–42
A3A1A4A2	U1,2
W1	VR1,2
	W1
W1	A3A1A6
	C6–9
	XA3A1A5

DELETED: A3A1A5C6,C39,L3,L12, R35,R38

LOGIC LEVELS

LOGIC	TTL	ECL	EECL	CMOS
HIGH(1)	>2V	>–0.5V	>–0.1V	>VDD
LOW(0)	<0.8V	<–1.5V	<–0.6V	<0.1V

< = EQUAL TO OR MORE NEGATIVE THAN
> = EQUAL TO OR MORE POSITIVE THAN

INPUT	TTL	ECL	EECL	CMOS
GROUND	LOW(0)	HIGH(1)	HIGH(1)	LOW(0)
OPEN	HIGH(1)	LOW(0)	LOW(0)	X

GROUND – 0V; X = UNDEFINED

TRANSISTOR AND INTEGRATED CIRCUIT PART NUMBERS

REFERENCE DESIGNATIONS	PART NUMBERS
Q1,3,4	1854–0345
Q2	1853–0015
Q5-9	1854–0546
U1	0955–0063
U2	1820–2842

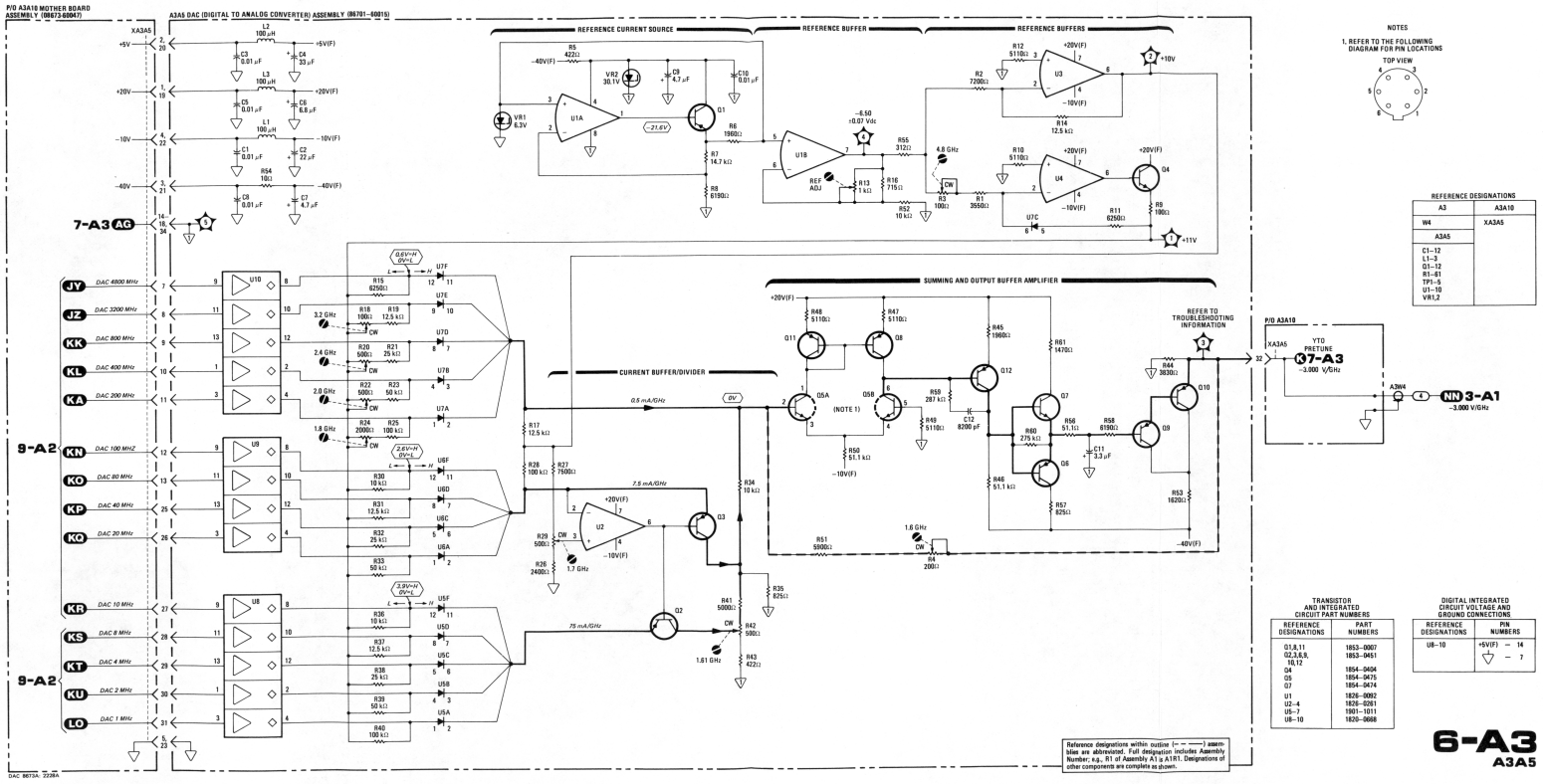
P/O A3A10 MOTHER BOARD ASSEMBLY (08673-60047)
A3A5 DAC (DIGITAL TO ANALOG CONVERTER) ASSEMBLY (86701-60015)
REFERENCE CURRENT SOURCE
REFERENCE BUFFER
REFERENCE BUFFERS
CURRENT BUFFER/DIVIDER
SUMMING AND OUTPUT BUFFER AMPLIFIER
NOTES
1. REFER TO THE FOLLOWING DIAGRAM FOR PIN LOCATIONS
TOP VIEW
REFERENCE DESIGNATIONS
A3
A3A10
W4
XA3A5
A3A5
C1–12
L1–3
Q1–12
R1–61
TP1–5
U1–10
VR1,2
TRANSISTOR AND INTEGRATED CIRCUIT PART NUMBERS
REFERENCE DESIGNATIONS
PART NUMBERS
Q1,8,11
Q2,3,6,9,
10,12
Q4
Q5
Q7
U1
U2–4
U5–7
U8–10
1853–0007
1853–0451
1854–0404
1854–0475
1854–0474
1826–0092
1826–0261
1901–1011
1820–0668
DIGITAL INTEGRATED CIRCUIT VOLTAGE AND GROUND CONNECTIONS
REFERENCE DESIGNATIONS
PIN NUMBERS
U8–10
+5V(F) — 14
— 7
Reference designations within outline (— — —) assemblies are abbreviated. Full designation includes Assembly Number; e.g., R1 of Assembly A1 is A1R1. Designations of other components are complete as shown.
6-A3
A3A5
DAC 8673A 2238A

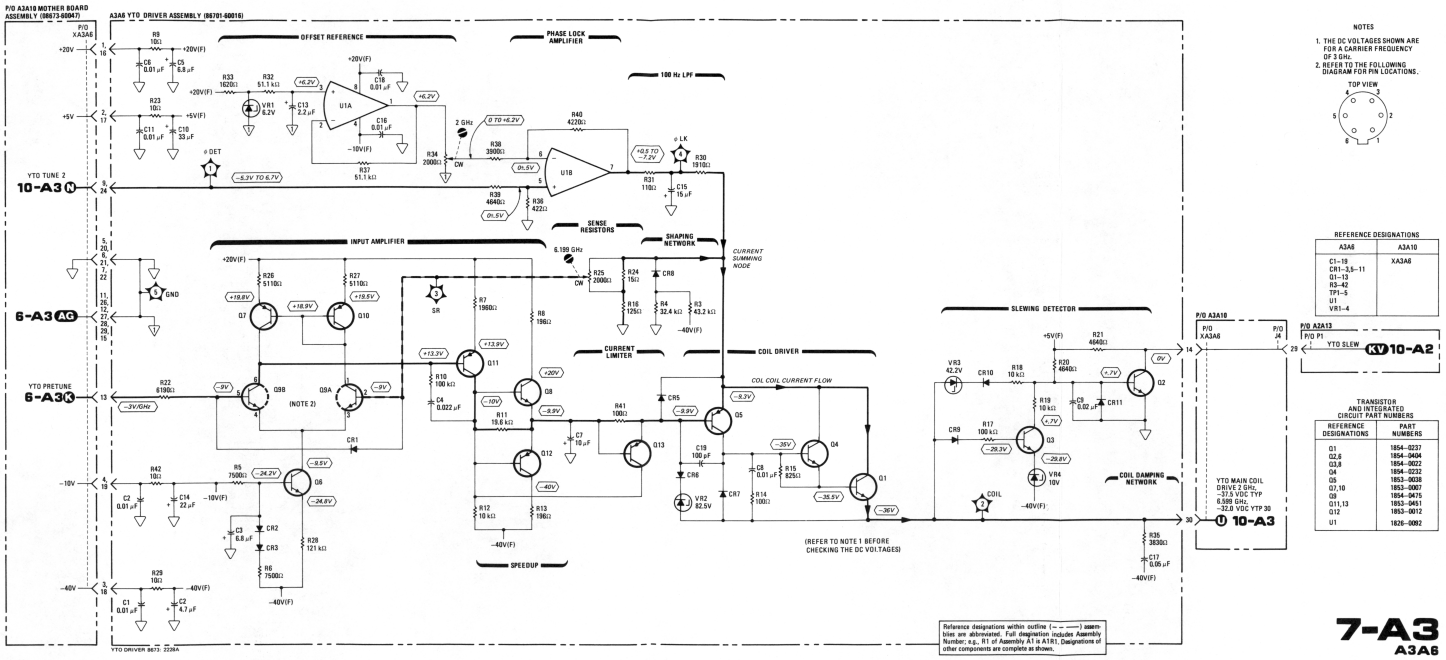

NOTES

1. THE DC VOLTAGES SHOWN ARE FOR A CARRIER FREQUENCY OF 3 GHz.
2. REFER TO THE FOLLOWING DIAGRAM FOR PIN LOCATIONS.

TOP VIEW

REFERENCE DESIGNATIONS

A3A6	A3A10
C1–19 CR1–3,5–11 Q1–13 R3–42 TP1–3 U1 VR1–4	XA3A6

TRANSISTOR AND INTEGRATED CIRCUIT PART NUMBERS

REFERENCE DESIGNATIONS	PART NUMBERS
Q1	1854–0237
Q2,6	1854–0404
Q3,8	1854–0022
Q4	1854–0232
Q5	1853–0038
Q7,10	1853–0007
Q9	1854–0475
Q11,13	1853–0451
Q12	1853–0012
U1	1826–0092

7-A3
A3A6

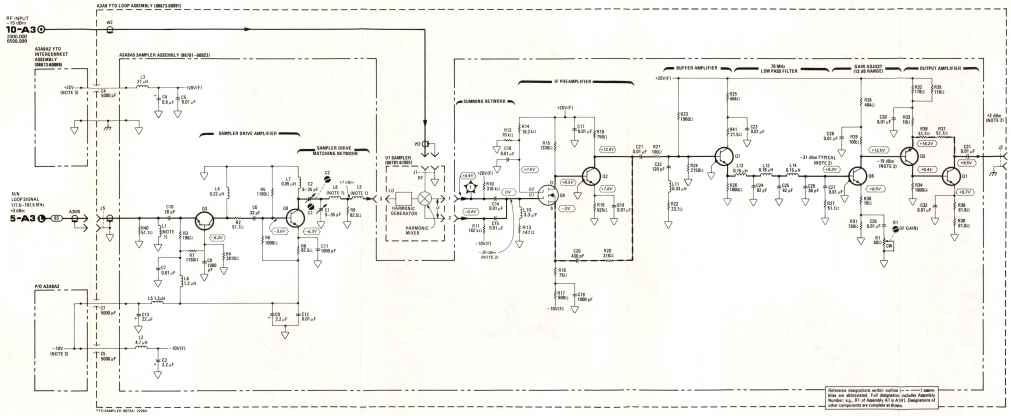
A3A8 YTO LOOP ASSEMBLY (8673A00B0)
RF INPUT
10-A3
A3A8A2 YTO INTERCONNECT ASSEMBLY (8673A00B0)
A3A8A5 SAMPLER ASSEMBLY (8626[ ]-60022)
SAMPLER DRIVE AMPLIFIER
SAMPLER DRIVE MATCHING NETWORK
SAMPLER
HARMONIC GENERATOR
HARMONIC MIXER
SUMMING NETWORK
IF PREAMPLIFIER
BUFFER AMPLIFIER
70 MHz LOW PASS FILTER
GAIN ADJUST (12 dB RANGE)
OUTPUT AMPLIFIER
IF OUT
20–30 MHz
5 dBm TO 9 dBm
A3A9 J5
09-A3
10 MHz LOOP SIGNAL
+5 dBm
5-A3
A3A9
J5
FID A3A8A2
REFERENCE DESIGNATIONS
A3 A3A8A5
RR
A3A9
DELETED: A3A8A5E1
TRANSISTOR PART NUMBERS
REFERENCE DESIGNATIONS
PART NUMBERS
1854-0247
1854-0345
1853-0354
1854-0215
NOTES
1. INDUCTORS A3A8A5L1, 8 AND 9 ARE PART OF THE CIRCUIT BOARD.
2. TYPICAL IF LEVELS MEASURED WITH 3.5 GHz PROBE (SEE CAUTION) WITH NORMAL LEAD LENGTH.
3. POWER SUPPLY INPUTS TO A3A8A2 ARE SHOWN ON SERVICE SHEET 5–A3.
Reference designations within outline [— — —] identifies an abbreviated, full designation (adds Assembly Number; e.g., R1 of Assembly A7 is A7R1. Designations of other components are complete as shown.
8-A3
A3A8A5

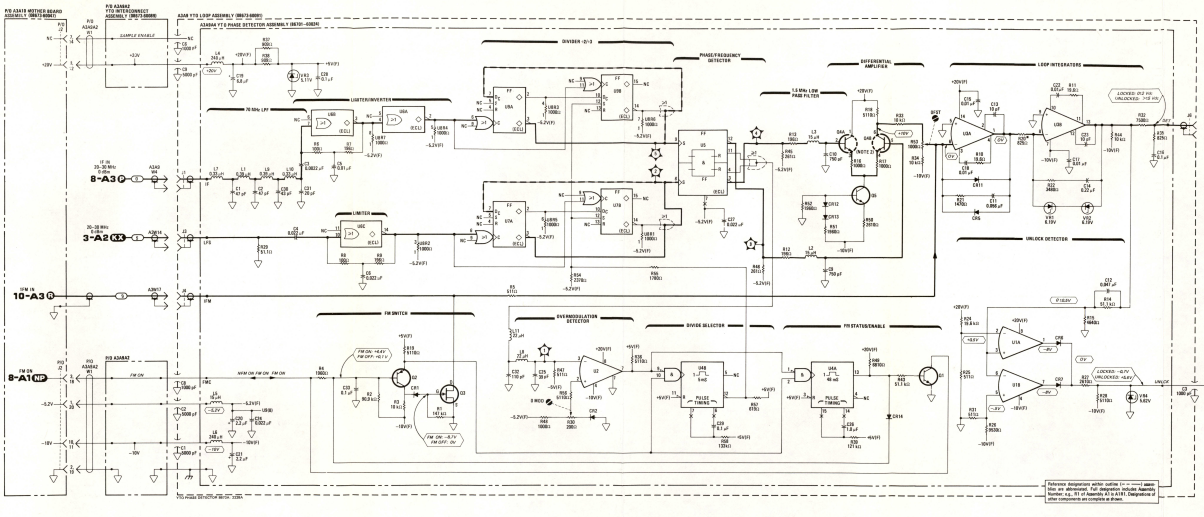
A3A9 YTO LOOP ASSEMBLY (08672-60091)
A3A9A4 YT O PHASE DETECTOR ASSEMBLY (08672-60024)
DIVIDER ÷2/÷3
PHASE/FREQUENCY DETECTOR
5.5 MHz LOW PASS FILTER
DIFFERENTIAL AMPLIFIER
LOOP INTEGRATORS
LIMITER
LIGHTER/INVERTER
UNLOCK DETECTOR
FM SWITCH
EVEN/MODULATION DETECTOR
DIVIDE SELECTOR
FM STATE/ENABLE
SAMPLE ENABLE
FM ON
NOTES
1. ASTERISK INDICATES SELECTED COMPONENT. AC AVERAGE SHOWN.
2. CONNECTOR J1 PIN LOCATIONS DIAGRAM F2 PIN LOCATIONS
TOP VIEW
REFERENCE DESIGNATIONS
TRANSISTOR AND INTEGRATED CIRCUIT PART NUMBERS
DELETES: A3A9AC419
LOGIC LEVELS
INTEGRATED CIRCUIT VOLTAGE AND GROUND CONNECTIONS
9-A3
A3A9A4

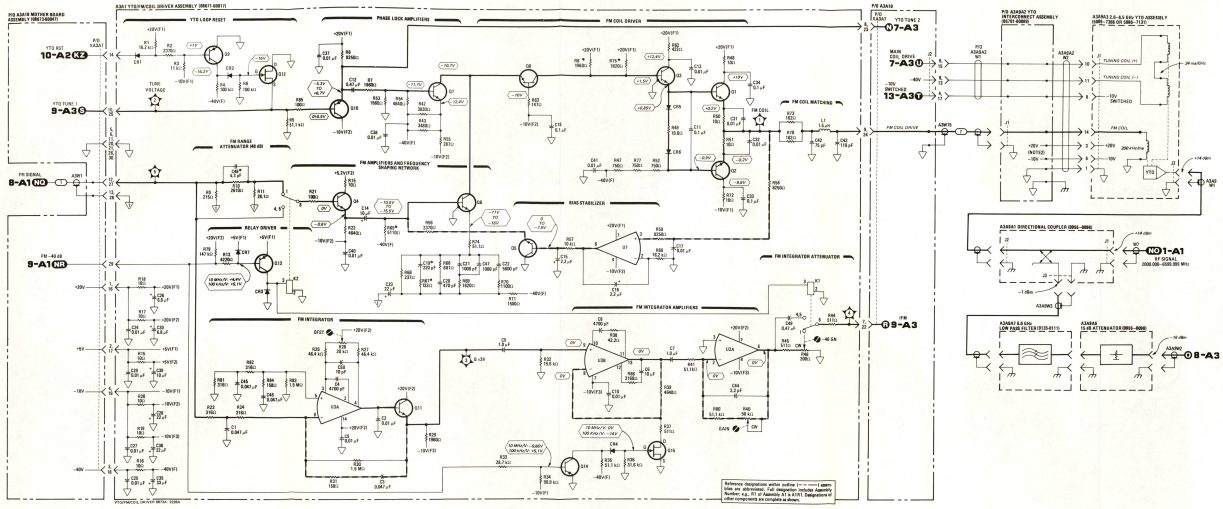
A3A7 YTO/FM/COIL DRIVER ASSEMBLY (5957-8997)
PHASE LOCK AMPLIFIERS
YTO LOOP RESET
FM COIL DRIVER
FM COIL MATCHING
FM RANGE ATTENUATOR (40 dB)
FM AMPLIFIERS AND FREQUENCY SHAPING NETWORK
RELAY DRIVER
BIAS STABILIZER
FM INTEGRATOR ATTENUATOR
FM INTEGRATOR
FM INTEGRATOR AMPLIFIERS
P/O A3A10 YTO/MEM/SWEEP ASSEMBLY (5970-8998)
A3A9A2 YTO INTERCONNECT ASSEMBLY (5970-8998)
A3A9A2 2.0–6.5 GHz YTO ASSEMBLY (5965-7000 OR 5965-7137)
A3A9A3 DIRECTIONAL COUPLER (5950-8998)
A3A9A4 6.5 GHz LOW PASS FILTER (5120-8211)
A3A9A5 (2.48 GHz) YIG-TUNED FILTER (5950-8999)
P/O A3A10
YTO TUNE 2
7-A3
MAIN COIL DRIVE
13-A3
SWITCHES
FM COIL DRIVE
A3W15
FM COIL
YTO
FM SIGNAL
8-A1 NC
FM –40 dB
9-A1 NB
YTO TUNE 1
9-A3
10-A2 KZ
RF SIGNAL
1-A1
2000.000–6500.000 MHz
FM
9-A3
8-A3
A3J1
A3J2
A3J3
A3J4
A3J5
A3J6
A3J7
A3J8
A3J9
A3J10
A3J11
A3J12
A3J13
A3J14
A3J15
A3J16
A3J17
A3J18
A3J19
A3J20
A3J21
A3J22
A3J23
A3J24
A3J25
A3J26
A3J27
A3J28
A3J29
A3J30
A3J31
A3J32
A3J33
A3J34
A3J35
A3J36
A3J37
A3J38
A3J39
A3J40

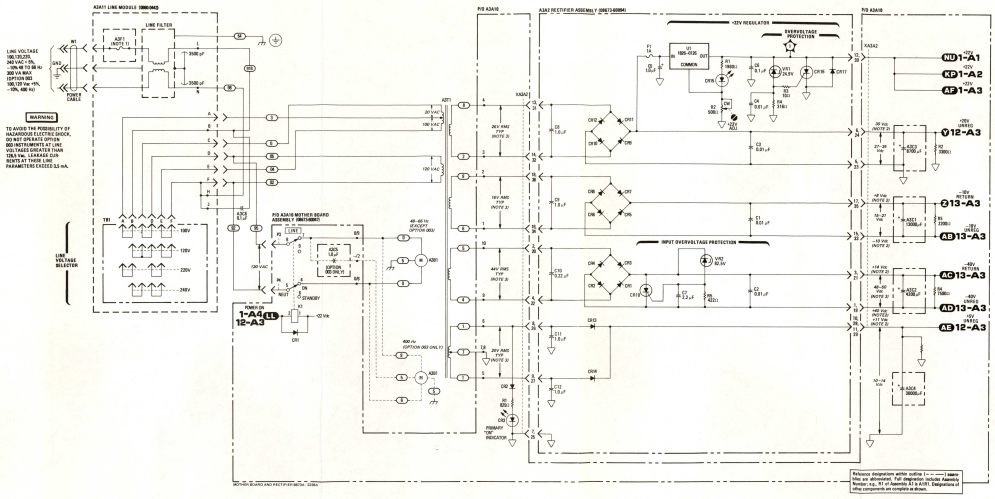
A3A11 LINE MODULE 08664-66521
LINE FILTER
P/O A3A10
A3A2 RECTIFIER ASSEMBLY 08672-60094
P/O A3A10
LINE VOLTAGE 100,120,220, 240 VAC ±10% 48 TO 66 Hz 300 VA MAX (OPTION 002 100,120 Vac +5%, -10%, 400 Hz)
POWER CABLE
WARNING
TO AVOID THE POSSIBILITY OF ELECTRICAL SHOCK, DO NOT OPERATE OPTION 002 INSTRUMENTS AT LINE VOLTAGES GREATER THAN 120Vrms. LEAKAGE CURRENTS MAY EXCEED PERFORMANCE LIMITS WHEN LINE VOLTAGE EXCEEDS 132 Vrms.
LINE VOLTAGE SELECTOR
TB1
100V
120V
220V
240V
P/O A3A10 MOTHER BOARD ASSEMBLY 08672-60021
LINE
POWER ON
1-A4 KL
12-A3
STANDBY
+12 Vdc
400 Hz (OPTION 002 ONLY)
PRIMARY "ON" INDICATOR
-12V REGULATOR
OVERVOLTAGE PROTECTION
COMMON
INPUT OVERVOLTAGE PROTECTION
+12V
ND 1-A1
KP 1-A2
AF 1-A3
+20V UNREG
V 12-A3
-20V UNREG
Θ 13-A3
AB 13-A3
-40V RETURN
AC 13-A3
-40V UNREG
AD 13-A3
+41V UNREG
AE 12-A3
WARNING
SECONDARY or VOLTAGES OF GREATER THAN 30 Vac AND RECTIFIED dc VOLTAGES OF GREATER THAN 60 Vdc ARE ALWAYS PRESENT ON THIS ASSEMBLY. WHEN THE INSTRUMENT IS CONNECTED TO LINE VOLTAGE.
TO AVOID THE POSSIBILITY OF ELECTRICAL SHOCK, ALWAYS DISCONNECT INSTRUMENT FROM LINE VOLTAGE BEFORE REMOVING OR INSTALLING ASSEMBLIES. USE CARE WHEN INSERTING OR REMOVING ASSEMBLIES TO AVOID DAMAGE TO CONNECTOR PINS.
WHILE WORKING ON THE CIRCUIT BOARDS WITH POWER SUPPLIED TO THE INSTRUMENT:
IF THIS CIRCUIT BOARD IS PLACED ON AN EXTENDER BOARD, THE POSSIBILITY OF COMING IN CONTACT WITH THE SECONDARY or VOLTAGES (>30 Vac) OR RECTIFIED VOLTAGES (>60 Vdc) IS GREATLY INCREASED. THESE VOLTAGES COULD CAUSE PERSONAL INJURY IF CONTACTED.
TO AVOID DAMAGE ASSOCIATED WITH THIS CIRCUIT BOARD WITH POWER SUPPLIED, WORK WITH ONE HAND. DO NOT TOUCH THE EXTENDER BOARD.
CAUTION
DO NOT REMOVE OR INSERT ASSEMBLIES WITH POWER ON AND THE POWER CABLE CONNECTED. DAMAGE TO THE INSTRUMENT MAY OCCUR.
NOTES
1. 44-100 Hz 120 VAC 24-220/240 VAC.
2. MEASURED WITH RESPECT TO CHASSIS GROUND.
3. SEE VOLTMETER WITH FLOATING COMMON.
REFERENCE DESIGNATIONS
NO PREFIX: A3A10
W1: CR1-3, F2, FL4, R1-5, A3A2
XF1: A3A11
F1: TB1
A3A2: C1-12, CR1-18, F1-2, R1-5, TP1, U1, VR1,2
Reference designators within outline [- - - -] apply to this assembly. Refer to Section VIII of Assembly A1 & A15. Designations of other components are complete as shown.
11-A3
A3A2, A3A10, A3A11
08672-60-11-A3-MOTHER BOARD AND RECTIFIER ASSY. - 3/1984

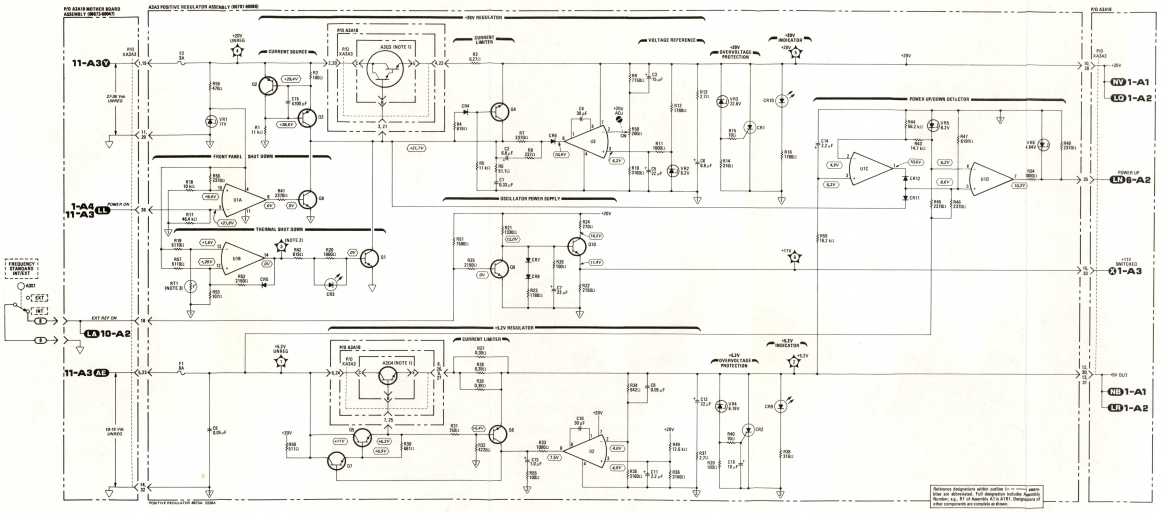
A3A3 POSITIVE REGULATOR ASSEMBLY (0070-8898)
P/O A3A10 MOTHER BOARD ASSEMBLY (0947-8004)
+20V REGULATOR
CURRENT SOURCE
CURRENT LIMITER
VOLTAGE REFERENCE
+20V OVERVOLTAGE PROTECTION
+20V INDICATOR
POWER UP/DOWN DETECTOR
FRONT PANEL SHUT DOWN
THERMAL SHUT DOWN
OSCILLATOR POWER SUPPLY
+5.2V REGULATOR
+5.2V OVERVOLTAGE PROTECTION
+5.2V INDICATOR
11-A3 V
11-A3 LL
11-A3 KE
1-A4 11-A3 LL
LA 10-A2
NW 1-A1
LW 1-A2
LA 6-A2
1-A3
NB 1-A1
LB 1-A2
FREQUENCY STANDARD INTERNAL
EXT REF ON
POWER ON
POWER UP
+5V OUT
WARNING
VOLTAGES OF GREATER THAN 60 Vdc DIFFERENTIAL ARE ALWAYS PRESENT WHEN THE INSTRUMENT IS CONNECTED TO THE LINE VOLTAGE. THIS VOLTAGE COULD CAUSE PERSONAL INJURY IF CONTACTED. BE CAREFUL WHILE WORKING ON THE POWER SUPPLIES TO THE INSTRUMENT.
CAUTION
DO NOT REMOVE OR INSERT POWER SUPPLY ASSEMBLIES WITH POWER CABLE CONNECTED. DAMAGE TO THE INSTRUMENT MAY OCCUR.
NOTES
1. A3A3 AND A3A9 ARE SEPARATE ASSEMBLIES MOUNTED ON THE REAR PANEL HEAT SINK AND ARE NOT PART OF A3 ASSEMBLY.
2. DURING NORMAL OPERATION THE VOLTAGE AT TP1 IS +12 Vdc (CW) OR (CCW) IN THE THERMAL SHUT DOWN MODE. THE VOLTAGE AT TP1 IS +0 Vdc (CW) OR (CCW).
3. RT1 RESISTANCE IS ABOUT 100Ω AT 20° C, 10Ω AT 80° C.
REFERENCE DESIGNATIONS
A3 / A3A3
Q3,4 / Q1 / — / A3A10 / XA3A3
C1–16 / C21, 22 / F1,2 / J2–10 / R1–80 / S1 / TP1–4 / U1–3 / VR1–4
TRANSISTOR AND INTEGRATED CIRCUIT PART NUMBERS
REFERENCE DESIGNATIONS / PART NUMBERS
Q1,4,5–8 / 1854-0404
Q2 / 1853-0411
Q3 / 1853-0011
Q9 / 1854-0041
Q0 / 1854-0095
Q10 / 1854-0030
U1 / 1826-0161
U2,3 / 1820-0223
Reference designations within outline (—— —) apply to A3A3 assembly. Refer to Component Location Number no. 81 of Appendix A7 to A3A1. Designations of other components are complete as shown.
12-A3
A3A3

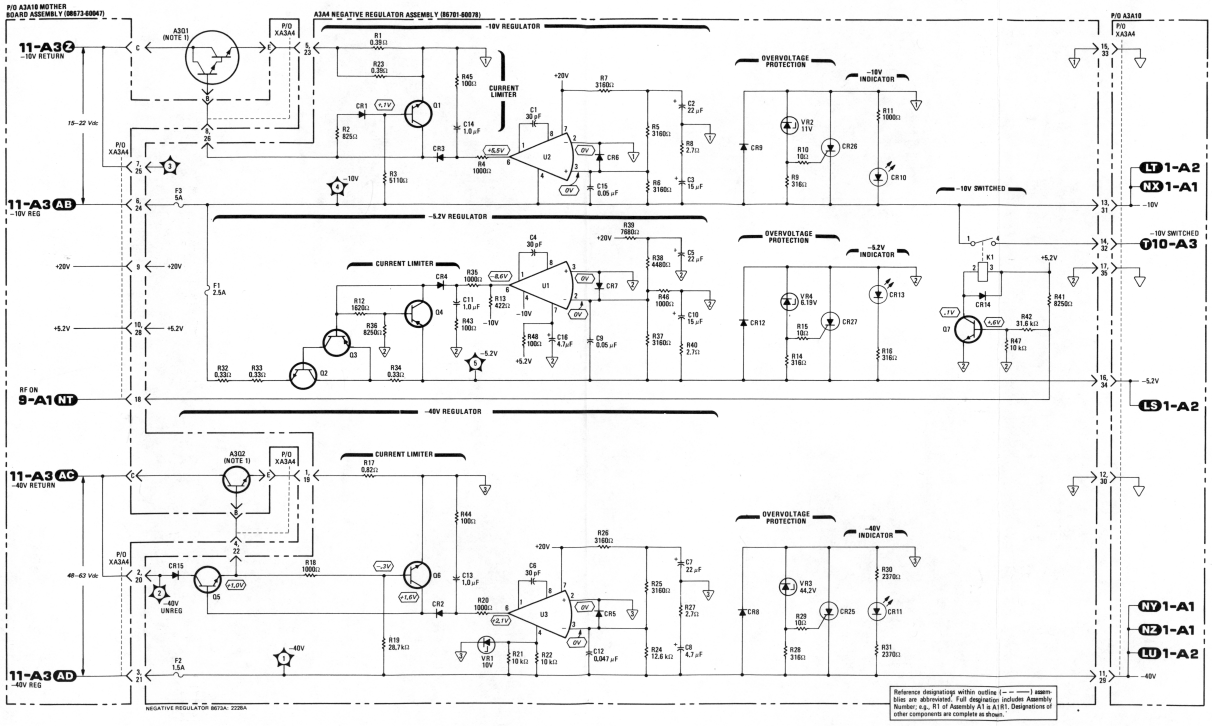

WARNING

DC VOLTAGES OF >40 Vdc DIFFERENTIAL ALWAYS PRESENT ON THIS BOARD ASSEMBLY WHENEVER THE INSTRUMENT IS CONNECTED TO THE LINE VOLTAGE. THIS VOLTAGE COULD CAUSE PERSONAL INJURY IF CONTACTED. BE CAREFUL WHILE WORKING ON THIS CIRCUIT WITH THE LINE VOLTAGE CONNECTED. IF THIS CIRCUIT BOARD IS PLACED ON AN EXTENDER BOARD, THE POSSIBILITY OF COMING IN CONTACT WITH THE 60 Vdc DIFFERENTIAL IS GREATLY INCREASED. THIS COULD CAUSE PERSONAL INJURY IF CONTACTED. BE CAREFUL WHILE WORKING WITH THIS CIRCUIT BOARD WITH POWER SUPPLIED. WORK WITH ONE HAND. DO NOT TOUCH THE EXTENDER BOARD.

CAUTION

DO NOT REMOVE OR INSERT POWER SUPPLY BOARDS WITH THE POWER CABLE CONNECTED. DAMAGE TO THE INSTRUMENT MAY OCCUR.

NOTES

1. A301 AND A302 ARE MOUNTED ON THE REAR PANEL HEAT SINK AND A3A10 MOTHER BOARD ASSEMBLY.

REFERENCE DESIGNATIONS

A3	A3A4
Q1, 2	C1-16 CR1-15, 25-27
A3A10	F1-3
XA3A4	K1 Q1-7 R1-48 TP1-5 U1-3 VR1-4

TRANSISTOR AND INTEGRATED CIRCUIT PART NUMBER

REFERENCE DESIGNATIONS	PART NUMBERS
A3	
Q1	1854-0618
Q2	1854-0294
A3A4	
Q1,6,7	1854-0404
Q2	1854-0441
Q3	1853-0001
Q4	1853-0007
Q5	1854-0271
U1-3	1820-0223

13-A3
A3A4

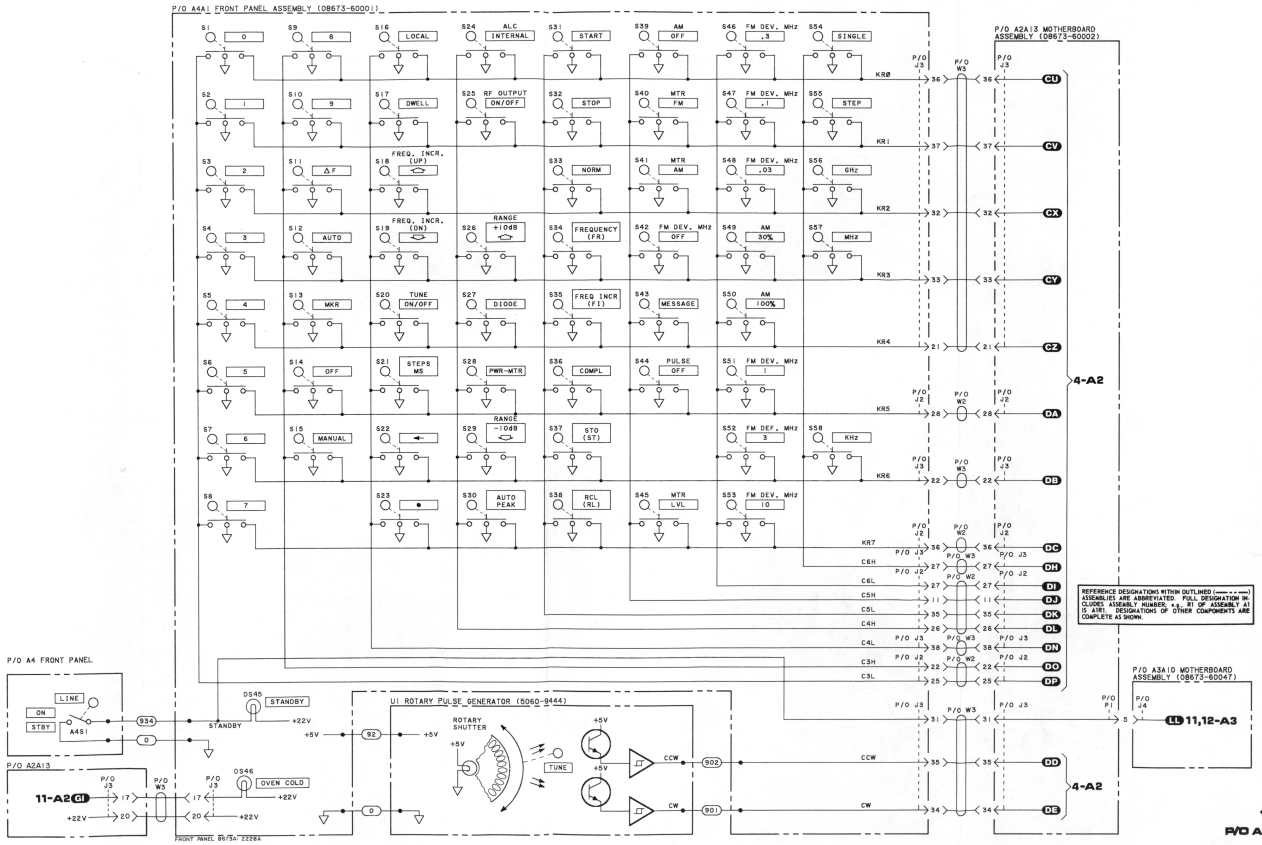

1-A4
P/O A4, P/O A4A1

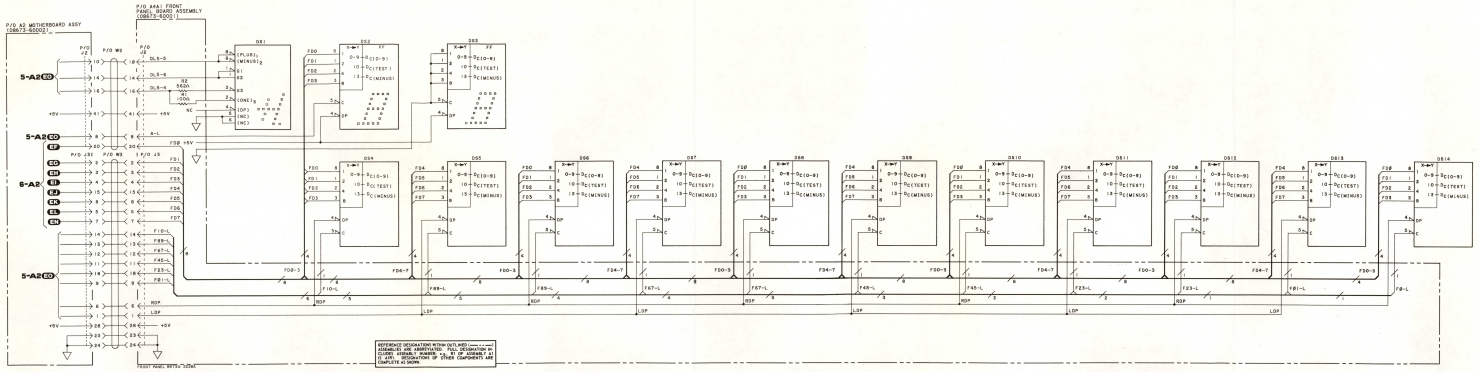
P/O A2 MOTHERBOARD ASSY (08873-60002)
P/O A4A1 FRONT PANEL BOARD ASSEMBLY (08873-60001)
P/O J2
P/O W2
P/O J3
P/O W3
5-A2XU
6-A2
5-A2XU
DS1
DS2
DS3
DS4
DS5
DS6
DS7
DS8
DS9
DS10
DS11
DS12
DS13
DS14
(PLUS)
(MINUS)
(ONE)
(DP)
(NC)
RZ
330Ω
+5V
FD0-7
FD0-3
FD4-7
FD10-L
FD9-L
FD8-L
FD7-L
FD6-L
FD5-L
FD4-L
FD3-L
FD2-L
FD1-L
FD0-L
RDP
LDP
REFERENCE DESIGNATIONS WITHIN OUTLINED (same value) ARE COMMON TO ALL ASSEMBLIES OF THE SAME CLOSEST ASSEMBLY NUMBER, e.g. A1 OF ASSEMBLY A1 OR A1A1. DESIGNATIONS OF OTHER COMPONENTS ARE COMPLETELY SHOWN.
FRONT PANEL BRTR

HEWLETT PACKARD

Should one of your HP instruments need repair, the HP service organization is ready to serve you. However, you can help us serve you more effectively. When sending an instrument to HP for repair, please fill out this card and attach it to the product. Increased repair efficiency and reduced turn-around time should result.

COMPANY

ADDRESS

TECHNICAL CONTACT PERSON

PHONE NO. EXT.

MODEL NO. SERIAL NO.

MODEL NO. SERIAL NO.

P.O. NO. DATE

Accessories returned with unit

☐ NONE ☐ CABLE(S)

☐ POWER CABLE ☐ ADAPTER(S)

OTHER _____

over

HEWLETT PACKARD

Should one of your HP instruments need repair, the HP service organization is ready to serve you. However, you can help us serve you more effectively. When sending an instrument to HP for repair, please fill out this card and attach it to the product. Increased repair efficiency and reduced turn-around time should result.

COMPANY

ADDRESS

TECHNICAL CONTACT PERSON

PHONE NO. EXT.

MODEL NO. SERIAL NO.

MODEL NO. SERIAL NO.

P.O. NO. DATE

Accessories returned with unit

☐ NONE ☐ CABLE(S)

☐ POWER CABLE ☐ ADAPTER(S)

OTHER _____

over

HEWLETT PACKARD

Should one of your HP instruments need repair, the HP service organization is ready to serve you. However, you can help us serve you more effectively. When sending an instrument to HP for repair, please fill out this card and attach it to the product. Increased repair efficiency and reduced turn-around time should result.

COMPANY

ADDRESS

TECHNICAL CONTACT PERSON

PHONE NO. EXT.

MODEL NO. SERIAL NO.

MODEL NO. SERIAL NO.

P.O. NO. DATE

Accessories returned with unit

☐ NONE ☐ CABLE(S)

☐ POWER CABLE ☐ ADAPTER(S)

OTHER _____

over

HEWLETT PACKARD

Should one of your HP instruments need repair, the HP service organization is ready to serve you. However, you can help us serve you more effectively. When sending an instrument to HP for repair, please fill out this card and attach it to the product. Increased repair efficiency and reduced turn-around time should result.

COMPANY

ADDRESS

TECHNICAL CONTACT PERSON

PHONE NO. EXT.

MODEL NO. SERIAL NO.

MODEL NO. SERIAL NO.

P.O. NO. DATE

Accessories returned with unit

☐ NONE ☐ CABLE(S)

☐ POWER CABLE ☐ ADAPTER(S)

OTHER _____

over

HEWLETT PACKARD

Should one of your HP instruments need repair, the HP service organization is ready to serve you. However, you can help us serve you more effectively. When sending an instrument to HP for repair, please fill out this card and attach it to the product. Increased repair efficiency and reduced turn-around time should result.

COMPANY

ADDRESS

TECHNICAL CONTACT PERSON

PHONE NO. EXT.

MODEL NO. SERIAL NO.

MODEL NO. SERIAL NO.

P.O. NO. DATE

Accessories returned with unit

☐ NONE ☐ CABLE(S)

☐ POWER CABLE ☐ ADAPTER(S)

OTHER _____

over

HEWLETT PACKARD

Should one of your HP instruments need repair, the HP service organization is ready to serve you. However, you can help us serve you more effectively. When sending an instrument to HP for repair, please fill out this card and attach it to the product. Increased repair efficiency and reduced turn-around time should result.

COMPANY

ADDRESS

TECHNICAL CONTACT PERSON

PHONE NO. EXT.

MODEL NO. SERIAL NO.

MODEL NO. SERIAL NO.

P.O. NO. DATE

Accessories returned with unit

☐ NONE ☐ CABLE(S)

☐ POWER CABLE ☐ ADAPTER(S)

OTHER _____

over

5955-8108

Service needed

☐ CALIBRATION ONLY

☐ REPAIR ☐ REPAIR & CAL

OTHER _____

_____

Observed symptoms/problems

FAILURE MODE IS:

☐ CONSTANT ☐ INTERMITTENT

SENSITIVE TO:

☐ COLD ☐ HEAT ☐ VIBRATION

FAILURE SYMPTOMS/SPECIAL CONTROL SETTINGS_____

_____

_____

_____

_____

_____

_____

_____

If unit is part of system list model number(s) of other interconnected instruments. _____

_____

5955-8108 Printed in U.S.A.

Service needed

☐ CALIBRATION ONLY

☐ REPAIR ☐ REPAIR & CAL

OTHER _____

_____

Observed symptoms/problems

FAILURE MODE IS:

☐ CONSTANT ☐ INTERMITTENT

SENSITIVE TO:

☐ COLD ☐ HEAT ☐ VIBRATION

FAILURE SYMPTOMS/SPECIAL CONTROL SETTINGS_____

_____

_____

_____

_____

_____

_____

_____

If unit is part of system list model number(s) of other interconnected instruments. _____

_____

5955-8108 Printed in U.S.A.

Service needed

☐ CALIBRATION ONLY

☐ REPAIR ☐ REPAIR & CAL

OTHER _____

_____

Observed symptoms/problems

FAILURE MODE IS:

☐ CONSTANT ☐ INTERMITTENT

SENSITIVE TO:

☐ COLD ☐ HEAT ☐ VIBRATION

FAILURE SYMPTOMS/SPECIAL CONTROL SETTINGS_____

_____

_____

_____

_____

_____

_____

_____

If unit is part of system list model number(s) of other interconnected instruments. _____

_____

5955-8108 Printed in U.S.A.

Service needed

☐ CALIBRATION ONLY

☐ REPAIR ☐ REPAIR & CAL

OTHER _____

_____

Observed symptoms/problems

FAILURE MODE IS:

☐ CONSTANT ☐ INTERMITTENT

SENSITIVE TO:

☐ COLD ☐ HEAT ☐ VIBRATION

FAILURE SYMPTOMS/SPECIAL CONTROL SETTINGS_____

_____

_____

_____

_____

_____

_____

_____

If unit is part of system list model number(s) of other interconnected instruments. _____

_____

9320-3896 Printed in U.S.A.

Service needed

☐ CALIBRATION ONLY

☐ REPAIR ☐ REPAIR & CAL

OTHER _____

_____

Observed symptoms/problems

FAILURE MODE IS:

☐ CONSTANT ☐ INTERMITTENT

SENSITIVE TO:

☐ COLD ☐ HEAT ☐ VIBRATION

FAILURE SYMPTOMS/SPECIAL CONTROL SETTINGS_____

_____

_____

_____

_____

_____

_____

_____

If unit is part of system list model number(s) of other interconnected instruments. _____

_____

9320-3896 Printed in U.S.A.

Service needed

☐ CALIBRATION ONLY

☐ REPAIR ☐ REPAIR & CAL

OTHER _____

_____

Observed symptoms/problems

FAILURE MODE IS:

☐ CONSTANT ☐ INTERMITTENT

SENSITIVE TO:

☐ COLD ☐ HEAT ☐ VIBRATION

FAILURE SYMPTOMS/SPECIAL CONTROL SETTINGS_____

_____

_____

_____

_____

_____

_____

_____

If unit is part of system list model number(s) of other interconnected instruments. _____

_____

9320-3896 Printed in U.S.A.

SALES OFFICES

Arranged alphabetically by country

1

ANGOLA
Telectra
Empresa Técnica de Equipamentos Eléctricos, S.A.R.L.
R. Barbosa Rodrigues, 41-1°DT.°
Caixa Postal, 6487
Luanda
Tel: 35515/6

ARGENTINA
Hewlett-Packard Argentina S.A.
Santa Fe 2035, Martinez
6140 **Buenos Aires**
Tel: 792-1239, 798-6086
Telex: 122443 AR CIGY

Biotron S.A.C.I.y M.
Avda. Paseo Colon 221
9 piso
1399 **Buenos Aires**
Tel: 30-4846/1851/8384
34-9356/0460/4551
Telex: (33) 17595 BIO AR

AUSTRALIA

AUSTRALIA CAPITAL TERR.
Hewlett-Packard Australia Pty. Ltd.
121 Wollongong Street
Fyshwick, 2609
Tel: 804244
Telex: 62650

NEW SOUTH WALES
Hewlett-Packard Australia Pty. Ltd.
31 Bridge Street
Pymble, 2073
Tel: 4496566
Telex: 21561

QUEENSLAND
Hewlett Packard Australia Pty. Ltd.
5th Floor
Teachers Union Building
495-499 Boundary Street
Spring Hill, 4000
Tel: 2291544

SOUTH AUSTRALIA
Hewlett-Packard Australia Pty. Ltd.
153 Greenhill Road
Parkside, 5063
Tel: 2725911
Telex: 82536

VICTORIA
Hewlett-Packard Australia Pty. Ltd.
31-41 Joseph Street
Blackburn, 3130
Tel: 89-6351
Telex: 31024 MELB

WESTERN AUSTRALIA
Hewlett-Packard Australia Pty. Ltd.
141 Stirling Highway
Nedlands, 6009
Tel: 3865455
Telex: 93859

AUSTRIA
Hewlett-Packard Ges.m.b.H.
Wehlistrasse 29
P.O. Box 7
A-1205 **Vienna**
Tel: 35-16-21-0
Telex: 13582/135066

Hewlett-Packard Ges.m.b.H.
Wehlistrasse, 29
A-1205 **Wien**
Tel: 35-16-21
Telex: 135066

BAHRAIN
Medical Only
Wael Pharmacy
P.O. Box 648
Bahrain
Tel: 54886, 56123
Telex: 8550 WAEL GJ

Al Hamidiya Trading and Contracting
P.O. Box 20074
Manama
Tel: 259978, 259958
Telex: 8895 KALDIA GJ

BANGLADESH
The General Electric Co. of Bangladesh Ltd.
Magnet House 72
Dilkusha Commercial Area
Motijheil, Dacca 2
Tel: 252415, 252419
Telex: 734

BELGIUM
Hewlett-Packard Benelux S.A./N.V.
Avenue du Col-Vert, 1, (Groenkraaglaan)
B-1170 **Brussels**
Tel: (02) 660 50 50
Telex: 23-494 paloben bru

BRAZIL
Hewlett-Packard do Brasil I.e.C. Ltda.
Alameda Rio Negro, 750
Alphaville
06400 **Barueri** SP
Tel: 429-3222

Hewlett-Packard do Brasil I.e.C. Ltda.
Rua Padre Chagas, 32
90000-**Pôrto Alegre**-RS
Tel: 22-2998, 22-5621

Hewlett-Packard do Brasil I.e.C. Ltda.
Av. Epitacio Pessoa, 4664
22471-**Rio de Janeiro**-RJ
Tel: 286-0237
Telex: 021-21905 HPBR-BR

CANADA

ALBERTA
Hewlett-Packard (Canada) Ltd.
11620A - 168th Street
Edmonton T5M 3T9
Tel: (403) 452-3670
TWX: 610-831-2431

Hewlett-Packard (Canada) Ltd.
210, 7220 Fisher St. S.E.
Calgary T2H 2H8
Tel: (403) 253-2713
TWX: 610-821-6141

BRITISH COLUMBIA
Hewlett-Packard (Canada) Ltd.
10691 Shellbridge Way
Richmond V6X 2W7
Tel: (604) 270-2277
TWX: 610-925-5059

MANITOBA
Hewlett-Packard (Canada) Ltd.
380-550 Century St.
St. James,
Winnipeg R3H 0Y1
Tel: (204) 786-6701
TWX: 610-671-3531

NOVA SCOTIA
Hewlett-Packard (Canada) Ltd.
P.O. Box 931
800 Windmill Road
Dartmouth B3B 1L1
Tel: (902) 469-7820
TWX: 610-271-4482

ONTARIO
Hewlett-Packard (Canada) Ltd.
1020 Morrison Dr.
Ottawa K2H 8K7
Tel: (613) 820-6483
TWX: 610-563-1636

Hewlett-Packard (Canada) Ltd.
6877 Goreway Drive
Mississauga L4V 1M8
Tel: (416) 678-9430
TWX: 610-492-4246

Hewlett-Packard (Canada) Ltd.
552 Newbold Street
London N6E 2S5
Tel: (519) 686-9181
TWX: 610-352-1201

QUEBEC
Hewlett-Packard (Canada) Ltd.
275 Hymus Blvd.
Pointe Claire H9R 1G7
Tel: (514) 697-4232
TWX: 610-422-3022

FOR CANADIAN AREAS NOT LISTED:
Contact Hewlett-Packard (Canada) Ltd. in Mississauga.

CHILE
Jorge Calcagni y Cia. Ltda.
Arturo Burhle 065
Casilla 16475
Correo 9, **Santiago**
Tel: 220222
Telex: JCALCAGNI

COLOMBIA
Instrumentación
Henrik A. Langebaek & Kier S.A.
Carrera 7 No. 48-75
Apartado Aéreo 6287
Bogotá, 1 D.E.
Tel: 269-8877
Telex: 44400

Instrumentación
H.A. Langebaek & Kier S.A.
Carrera 63 No. 49-A-31
Apartado 54098
Medellin
Tel: 304475

COSTA RICA
Cientifica Costarricense S.A.
Avenida 2, Calle 5
San Pedro de Montes de Oca
Apartado 10159
San José
Tel: 24-38-20, 24-08-19
Telex: 2367 GALGUR CR

CYPRUS
Kypronics
19 Gregorios Xenopoulos Street
P.O. Box 1152
Nicosia
Tel: 45628/29
Telex: 3018

CZECHOSLOVAKIA
Hewlett-Packard
Obchodni zastupitelstvi v CSSR
Pisemny styk
Post. schranka 27
CS 118 01 **Praha** 011
CSSR

Vyvojova a Provozni Zakladna Vyzkumnych Ustavu v Bechovicich
CSSR-25097 **Bechovice u Prahy**
Tel: 89 93 41
Telex: 12133

Institute of Medical Bionics
Vyskumny Ustav Lekarskej Bioniky
Jedlova 6
CS-88346 **Bratislava-Kramare**
Tel: 44-551
Telex: 93229

DENMARK
Hewlett-Packard A/S
Datavej 52
DK-3460 **Birkerod**
Tel: (02) 81 66 40
Telex: 37409 hpas dk

Hewlett-Packard A/S
Navervej 1
DK-8600 **Silkeborg**
Tel: (06) 82 71 66
Telex: 37409 hpas dk

ECUADOR
CYEDE Cia. Ltda.
P.O. Box 6423 CCI
Av. Eloy Alfaro 1749
Quito
Tel: 450-975, 243-052
Telex: 2548 CYEDE ED

Medical Only
Hospitalar S.A.
Casilla 3590
Robles 625
Quito
Tel: 545-250

EGYPT
I.E.A.
International Engineering Associates
24 Hussein Hegazi Street
Kasr-el-Aini
Cairo
Tel: 23 829
Telex: 93830

SAMITRO
Sami Amin Trading Office
18 Abdel Aziz Gawish
Abdine-Cairo
Tel: 24932

EL SALVADOR
IPESA
Bulevar de los Heroes 11-48
Edificio Sarah 1148
San Salvador
Tel: 252787

ETHIOPIA
Abdeila Abdulmalik
P.O. Box 2635
Addis Ababa
Tel: 11 93 40

FINLAND
Hewlett-Packard Oy
Revontulentie, 7
SF-02100 **Espoo** 10
Tel: (90) 455 0211
Telex: 121563 hewpa sf

FRANCE
Hewlett-Packard France
Zone d'activites de Courtaboeuf
Avenue des Tropiques
Boite Postale 6
91401 **Orsay**-Cédex
Tel: (1) 907 78 25
TWX: 600048F

Hewlett-Packard France
Chemin des Mouilles
B.P. 162
69130 **Ecully**
Tel: (78) 33 81 25
TWX: 310617F

Hewlett-Packard France
20, Chemin de La Cépière
31081 **Toulouse**
Le Mirail-Cédex
Tel: (61) 40 11 12

Hewlett-Packard France
Le Ligoures
Place Romée de Villeneuve
13100 **Aix-en-Provence**
Tel: (42) 59 41 02
TWX: 410770F

Hewlett-Packard France
2, Allee de la Bourgonette
35100 **Rennes**
Tel: (99) 51 42 44
TWX: 740912F

Hewlett-Packard France
18, rue du Canal de la Marne
67300 **Schiltigheim**
Tel: (88) 83 08 10
TWX: 890141F

Hewlett-Packard France
Immeuble péricentre
rue van Gogh
59650 **Villeneuve** D'Ascq
Tel: (20) 91 41 25
TWX: 160124F

Hewlett-Packard France
Bâtiment Ampère
Rue de la Commune de Paris
B.P. 300
93153 **Le Blanc Mesnil**-Cédex
Tel: (01) 931 88 50
Telex: 211032F

Hewlett-Packard France
Av. du Pdt. Kennedy
33700 **Merignac**
Tel: (56) 97 01 81

Hewlett-Packard France
Immeuble Lorraine
Boulevard de France
91035 **Evry**-Cédex
Tel: 077 96 60
Telex: 692315F

Hewlett-Packard France
23 Rue Lothaire
57000 **Metz**
Tel: (87) 65 53 50

GERMAN FEDERAL REPUBLIC
Hewlett-Packard GmbH
Vertriebszentrale Frankfurt
Berner Strasse 117
Postfach 560 140
D-6000 **Frankfurt** 56
Tel: (06011) 50041
Telex: 04 13249 hpffm d

Hewlett-Packard GmbH
Technisches Büro Böblingen
Herrenberger Strasse 110
D-7030 **Böblingen,** Württemberg
Tel: (07031) 667-1
Telex: 07265739 bbn

Hewlett-Packard GmbH
Technisches Büro Düsseldorf
Emanuel-Leutze-Str. 1 (Seestern)
D-4000 **Düsseldorf**
Tel: (0211) 5971-1
Telex: 085/86 533 hpdd d

Hewlett-Packard GmbH
Technisches Büro Hamburg
Kapstadtring 5
D-2000 **Hamburg** 60
Tel: (040) 63804-1
Telex: 21 63 032 hphh d

Hewlett-Packard GmbH
Technisches Büro Hannover
Am Grossmarkt 6
D-3000 **Hannover** 91
Tel: (0511) 46 60 01
Telex: 092 3259

Hewlett-Packard GmbH
Technisches Büro Nürnberg
Neumeyerstrasse 90
D-8500 **Nürnberg**
Tel: (0911) 52 20 83
Telex: 0623 860

Hewlett-Packard GmbH
Technisches Büro München
Eschenstrasse 5
D-8021 **Taufkirchen**
Tel: (089) 6117-1
Telex: 0524985

Hewlett-Packard GmbH
Technisches Büro Berlin
Kaithstrasse 2-4
D-1000 **Berlin** 30
Tel: (030) 24 90 86
Telex: 018 3405 hpbln d

GREECE
Kostas Karayannis
8 Omirou Street
Athens 133
Tel: 32 30 303/32/37 731
Telex: 21 59 62 RKAR GR

GUAM
Guam Medical Supply, Inc.
Suite C, Airport Plaza
P.O. Box 8947
Tamuning 96911
Tel: 646-4513

GUATEMALA
IPESA
Avenida Reforma 3-48
Zona 9
Guatemala City
Tel: 316627, 314786, 66471-5, ext. 9
Telex: 4192 Teletro Gu

HONG KONG
Hewlett-Packard Hong Kong Ltd.
11th Floor, Four Seas Bldg.
212 Nathan Rd.
Kowloon
Tel: 3-697446 (5 lines)
Telex: 36678 HX

Medical/Analytical Only
Schmidt & Co. (Hong Kong) Ltd.
Wing On Centre, 28th Floor
Connaught Road, C.
Hong Kong
Tel: 5-455644
Telex: 74766 SCHMX HX

INDIA
Blue Star Ltd.
Sahas
414/2 Vir Savarkar Marg
Prabhadevi
Bombay 400 025
Tel: 45 78 87
Telex: 011-4093

Blue Star Ltd.
Band Box House
Prabhadevi
Bombay 400 025
Tel: 45 73 01
Telex: 011-3751

Blue Star Ltd.
Bhavdeep
Stadium Road
Ahmedabad 380 014
Tel: 43922
Telex: 012-234

Blue Star Ltd.
7 Hare Street
Calcutta 700 001
Tel: 23-0131
Telex: 021-7655

Blue Star Ltd.
Bhandari House
91 Nehru Place
New Delhi 110 024
Tel: 682547
Telex: 031-2463

Blue Star Ltd.
T.C. 7/603 'Poornima'
Maruthankuzhi
Trivandrum 695 013
Tel: 65799
Telex: 0884-259

Blue Star Ltd.
11 Magarath Road
Bangalore 560 025
Tel: 55668
Telex: 0845-430

Blue Star Ltd.
Meeakshi Mandiram
XXXXV/1379-2 Mahatma Gandhi Rd.
Cochin 682 016
Tel: 32069
Telex: 085-514

Blue Star Ltd.
1-1-117/1 Sarojini Devi Road
Secunderabad 500 033
Tel: 70126
Telex: 0155-459

Blue Star Ltd.
133 Kodambakkam High Road
Madras 600 034
Tel: 82057
Telex: 041-379

ICELAND
Medical Only
Elding Trading Company Inc.
Hafnarnvoli - Tryggvagötu
P.O. Box 895
IS-**Reykjavik**
Tel: 1 58 20/1 63 03

INDONESIA
BERCA Indonesia P.T.
P.O. Box 496/Jkt.
Jln. Abdul Muis 62
Jakarta
Tel: 349255, 349886
Telex: 46748 BERSIL IA

BERCA Indonesia P.T.
P.O. Box 174/Sby.
23 Jln. Jimerto
Surabaya
Tel: 42027

IRELAND
Hewlett-Packard Ltd.
Kestrel House
Clanwilliam Place
Lower Mount Street
Dublin 2, Eire

Hewlett-Packard Ltd.
2C Avongberg Ind. Est.
Long Mile Road
Dublin 12
Tel: 514322/514224
Telex: 30439

Medical Only
Cardiac Services (Ireland) Ltd.
Kilmore Road
Artane
Dublin 5, Eire
Tel: (01) 315820

Medical Only
Cardiac Services Co.
95A Finaghy Rd. South
Belfast BT10 0BY
GB-Northern Ireland
Tel: (0232) 625566
Telex: 747626

ISRAEL
Electronics Engineering Div. of Motorola Israel Ltd.
16, Kremenetski Street
P.O. Box 25016
Tel-Aviv
Tel: 38973
Telex: 33569, 34164

ITALY
Hewlett-Packard Italiana S.p.A.
Via G. Di Vittorio, 9
20063 **Cernusco Sul Naviglio** (MI)
Tel: (2) 903691
Telex: 334632 HEWPACKIT

Hewlett-Packard Italiana S.p.A.
Via Turazza, 14
35100 **Padova**
Tel: (49) 664888
Telex: 430315 HEWPACKI

Hewlett-Packard Italiana S.p.A.
Via G. Armellini 10
1-00143 **Roma**
Tel: (06) 54 69 61
Telex: 610514

Hewlett-Packard Italiana S.p.A.
Corso Giovanni Lanza 94
I-10133 **Torino**
Tel: (011) 659308
Telex: 221079

Hewlett-Packard Italiana S.p.A.
Via Principe Nicola 43 G/C
I-95126 **Catania**
Tel: (095) 37 05 04
Telex: 970291

Hewlett-Packard Italiana S.p.A.
Via Nuova san Rocco A Capadimonte, 62A
80131 **Napoli**
Tel: (081) 710698

Hewlett-Packard Italiana S.p.A.
Via Martin Luther King, 38/111
I-40132 **Bologna**
Tel: (051) 402394
Telex: 511630

JAPAN
Yokogawa-Hewlett-Packard Ltd.
29-21, Takaido-Higashi 3-chome
Suginami-ku, **Tokyo** 168
Tel: 03-331-6111
Telex: 232-2024 YHP-Tokyo

Yokogawa-Hewlett-Packard Ltd.
Chuo Bldg., 4th Floor
4-20, Nishinakajima 5-chome
Yodogawa-ku, Osaka-shi
Osaka, 532
Tel: 06-304-6021
Telex: 523-3624

Yokogawa-Hewlett-Packard Ltd.
Sunitomo Seimei Nagaya Bldg.
11-2 Shimosasajima-cho, Nakamura-ku, **Nagoya,** 450
Tel: 052 571-5171

Yokogawa-Hewlett-Packard Ltd.
Tanigawa Building
2-24-1 Tsuruya-cho
Kanagawa-ku
Yokohama, 221
Tel: 045-312-1252
Telex: 382-3204 YHP YOK

Yokogawa-Hewlett-Packard Ltd.
Mito Mitsui Building
105, 1-chome, San-no-maru
Mito, Ibaragi 310
Tel: 0292-25-7470

Yokogawa-Hewlett-Packard Ltd.
Inoue Building
1348-3, Asahi-cho, 1-chome
Atsugi, Kanagawa 243
Tel: 0462-24-0452

Yokogawa-Hewlett-Packard Ltd.
Kumagaya Asahi
Hachijuni Building
4th Floor
3-4, Tsukuba
Kumagaya, Saitama 360
Tel: 0485-24-6563

JORDAN
Mouasher Cousins Co.
P.O. Box 1387
Amman
Tel: 24907/39907
Telex: SABCO JO 1456

KENYA
ADCOM Ltd., Inc.
P.O. Box 30070
Nairobi
Tel: 331955
Telex: 22639

Medical Only
International Aeradio (E.A.) Ltd.
P.O. Box 19012
Nairobi Airport
Nairobi
Tel: 336055/56
Telex: 22201/22301

Medical Only
International Aeradio (E.A.) Ltd.
P.O. Box 95221
Mombasa

KOREA
Samsung Electronics Co., Ltd.
4759 Shingil-6-Dong
Yeong Deung POU
Seoul
Tel: 833-4122, 4121
Telex: SAMSAN 27364

KUWAIT
Al-Khaldiya Trading & Contracting
P.O. Box 830-Safat
Kuwait
Tel: 42 4910/41 1726
Telex: 2481 Areeg kt

LUXEMBURG
Hewlett-Packard Benelux S.A./N.V.
Avenue du Col-Vert, 1 (Groenkraaglaan)
B-1170 **Brussels**
Tel: (02) 660 5050
Telex: 23 494

MALAYSIA
Hewlett-Packard Sales (Malaysia) Sdn. Bhd.
Suite 2.21/2.22
Bangunan Angkasa Raya
Jalan Ampang
Kuala Lumpur
Tel: 483680, 485653

Protel Engineering
P.O. Box 1917
Lot 259, Satok Road
Kuching, **Sarawak**
Tel: 53544

MEXICO
Hewlett-Packard Mexicana, S.A. de C.V.
Av. Periférico Sur No. 6501
Tepepan, Xochimilco
Mexico 23, D.F.
Tel: 905-676-4600
Telex: 017-74-507

Hewlett-Packard Mexicana, S.A. de C.V.
Rio Volga #600
Col. Del Valle
Monterrey, N.L.
Tel: 78-32-10

MOROCCO
Dolbeau
81 rue Karatchi
Casablanca
Tel: 3041 82
Telex: 23051/22822

Gerep
2, rue d'Agadir
Boite Postal 156
Casablanca
Tel: 272093/5
Telex: 23 739

MOZAMBIQUE
A.N. Goncalves, Ltd.
162, 1° Apt. 14 Av. D. Luis
Caixa Postal 107
Maputo
Tel: 27091, 27114
Telex: 6-203 NEGON Mo

NETHERLANDS
Hewlett-Packard Benelux N.V.
Van Heuven Goedhartlaan 121
P.O. Box 667
1181KK **Amstelveen**
Tel: (20) 47 20 21
Telex: 13 216

NEW ZEALAND
Hewlett-Packard (N.Z.) Ltd.
4-12 Cruickshank Street
Kilbirnie, Wellington 3
P.O. Box 9443
Courtney Place
Wellington
Tel: 877-199

Hewlett-Packard (N.Z.) Ltd.
P.O. Box 26-189
169 Manukau Road
Epsom, **Auckland**
Tel: 687-159

Analytical/Medical Only
Northrop Instruments & Systems Ltd.,
Sturdee House
85-87 Ghuznee Street
P.O. Box 2406
Wellington
Tel: 850-091
Telex: NZ 31291

Northrup Instruments & Systems Ltd.
Eden House, 44 Khyber Pass Rd.
P.O. Box 9682, Newmarket
Auckland 1
Tel: 794-091

Northrup Instruments & Systems Ltd.
Terrace House, 4 Oxford Terrace
P.O. Box 8388
Christchurch
Tel: 64-165

NIGERIA
The Electronics Instrumentations Ltd.
N6B/770 Oyo Road
Oluseun House
P.M.B. 5402
Ibadan
Tel: 461577
Telex: 31231 TEIL NG

The Electronics Instrumentations Ltd.
144 Agege Motor Road, Mushin
P.O. Box 481
Mushin, **Lagos**

NORWAY
Hewlett-Packard Norge A/S
Ostendalen 18
P.O. Box 34
1345 **Osteraas**
Tel: (02) 1711 80
Telex: 16621 hpnas n

Hewlett-Packard Norge A/S
Nygaardsgaten 114
P.O. Box 4210
5013 Nygaardsgaten,
Bergen
Tel: (05) 21 97 33

PANAMA
Electrónico Balboa, S.A.
Aparatado 4929
Panama 5
Calle Samuel Lewis
Edificio "Alfa," No. 2
Ciudad de Panama
Tel: 64-2700
Telex: 3483103 Curundu, Canal Zone

PERU
Compañía Electro Médica S.A.
Los Flamencos 145
San Isidro Casilla 1030
Lima 1
Tel: 41-4325
Telex: Pub. Booth 25424 SISIDRO

PAKISTAN
Mushko & Company Ltd.
Oosman Chambers
Abdullah Haroon Road
Karachi-3
Tel: 511027, 512927
Telex: 2894

SALES OFFICES

Arranged alphabetically by country

1

ANGOLA
Telectra
Empresa Técnica de Equipamentos Eléctricos, S.A.R.L.
R. Barbosa Rodrigues, 41-1°DT.°
Caixa Postal, 6487
Luanda
Tel: 35515/6

ARGENTINA
Hewlett-Packard Argentina S.A.
Santa Fe 2035, Martinez
6140 **Buenos Aires**
Tel: 792-1239, 798-6086
Telex: 122443 AR CIGY

Biotron S.A.C.I.y M.
Avda. Paseo Colon 221
9 piso
1399 **Buenos Aires**
Tel: 30-4846/1851/8384
34-9356/0460/4551
Telex: (33) 17595 BIO AR

AUSTRALIA

AUSTRALIA CAPITAL TERR.
Hewlett-Packard Australia Pty. Ltd.
121 Wollongong Street
Fyshwick, 2609
Tel: 804244
Telex: 62650

NEW SOUTH WALES
Hewlett-Packard Australia Pty. Ltd.
31 Bridge Street
Pymble, 2073
Tel: 4496566
Telex: 21561

QUEENSLAND
Hewlett Packard Australia Pty. Ltd.
5th Floor
Teachers Union Building
495-499 Boundary Street
Spring Hill, 4000
Tel: 2291544

SOUTH AUSTRALIA
Hewlett-Packard Australia Pty. Ltd.
153 Greenhill Road
Parkside, 5063
Tel: 2725911
Telex: 82536

VICTORIA
Hewlett-Packard Australia Pty. Ltd.
31-41 Joseph Street
Blackburn, 3130
Tel: 89-6351
Telex: 31024 MELB

WESTERN AUSTRALIA
Hewlett-Packard Australia Pty. Ltd.
141 Stirling Highway
Nedlands, 6009
Tel: 3865455
Telex: 93859

AUSTRIA
Hewlett-Packard Ges.m.b.H.
Wehlistrasse 29
P.O. Box 7
A-1205 **Vienna**
Tel: 35-16-21-0
Telex: 13582/135066

Hewlett-Packard Ges.m.b.H.
Wehlistrasse, 29
A-1205 **Wien**
Tel: 35-16-21
Telex: 135066

BAHRAIN
Medical Only
Wael Pharmacy
P.O. Box 648
Bahrain
Tel: 54886, 56123
Telex: 8550 WAEL GJ

Al Hamidiya Trading and Contracting
P.O. Box 20074
Manama
Tel: 259978, 259958
Telex: 8895 KALDIA GJ

BANGLADESH
The General Electric Co. of Bangladesh Ltd.
Magnet House 72
Dilkusha Commercial Area
Motijheil, Dacca 2
Tel: 252415, 252419
Telex: 734

BELGIUM
Hewlett-Packard Benelux S.A./N.V.
Avenue du Col-Vert, 1, (Groenkraaglaan)
B-1170 **Brussels**
Tel: (02) 660 50 50
Telex: 23-494 paloben bru

BRAZIL
Hewlett-Packard do Brasil I.e.C. Ltda.
Alameda Rio Negro, 750
Alphaville
06400 **Barueri** SP
Tel: 429-3222

Hewlett-Packard do Brasil I.e.C. Ltda.
Rua Padre Chagas, 32
90000-**Pôrto Alegre**-RS
Tel: 22-2998, 22-5621

Hewlett-Packard do Brasil I.e.C. Ltda.
Av. Epitacio Pessoa, 4664
22471-**Rio de Janeiro**-RJ
Tel: 286-0237
Telex: 021-21905 HPBR-BR

CANADA

ALBERTA
Hewlett-Packard (Canada) Ltd.
11620A - 168th Street
Edmonton T5M 3T9
Tel: (403) 452-3670
TWX: 610-831-2431

Hewlett-Packard (Canada) Ltd.
210, 7220 Fisher St. S.E.
Calgary T2H 2H8
Tel: (403) 253-2713
TWX: 610-821-6141

BRITISH COLUMBIA
Hewlett-Packard (Canada) Ltd.
10691 Shellbridge Way
Richmond V6X 2W7
Tel: (604) 270-2277
TWX: 610-925-5059

MANITOBA
Hewlett-Packard (Canada) Ltd.
380-550 Century St.
St. James,
Winnipeg R3H 0Y1
Tel: (204) 786-6701
TWX: 610-671-3531

NOVA SCOTIA
Hewlett-Packard (Canada) Ltd.
P.O. Box 931
800 Windmill Road
Dartmouth B3B 1L1
Tel: (902) 469-7820
TWX: 610-271-4482

ONTARIO
Hewlett-Packard (Canada) Ltd.
1020 Morrison Dr.
Ottawa K2H 8K7
Tel: (613) 820-6483
TWX: 610-563-1636

Hewlett-Packard (Canada) Ltd.
6877 Goreway Drive
Mississauga L4V 1M8
Tel: (416) 678-9430
TWX: 610-492-4246

Hewlett-Packard (Canada) Ltd.
552 Newbold Street
London N6E 2S5
Tel: (519) 686-9181
TWX: 610-352-1201

QUEBEC
Hewlett-Packard (Canada) Ltd.
275 Hymus Blvd.
Pointe Claire H9R 1G7
Tel: (514) 697-4232
TWX: 610-422-3022

FOR CANADIAN AREAS NOT LISTED:
Contact Hewlett-Packard (Canada) Ltd. in Mississauga.

CHILE
Jorge Calcagni y Cia. Ltda.
Arturo Burhle 065
Casilla 16475
Correo 9, **Santiago**
Tel: 220222
Telex: JCALCAGNI

COLOMBIA
Instrumentación
Henrik A. Langebaek & Kier S.A.
Carrera 7 No. 48-75
Apartado Aéreo 6287
Bogotá, 1 D.E.
Tel: 269-8877
Telex: 44400

Instrumentación
H.A. Langebaek & Kier S.A.
Carrera 63 No. 49-A-31
Apartado 54098
Medellin
Tel: 304475

COSTA RICA
Cientifica Costarricense S.A.
Avenida 2, Calle 5
San Pedro de Montes de Oca
Apartado 10159
San José
Tel: 24-38-20, 24-08-19
Telex: 2367 GALGUR CR

CYPRUS
Kypronics
19 Gregorios Xenopoulos Street
P.O. Box 1152
Nicosia
Tel: 45628/29
Telex: 3018

CZECHOSLOVAKIA
Hewlett-Packard
Obchodni zastupitelstvi v CSSR
Pisemny styk
Post. schranka 27
CS 118 01 **Praha** 011
CSSR

Vyvojova a Provozni Zakladna
Vyzkumnych Ustavu v Bechovicich
CSSR-25097 **Bechovice u Prahy**
Tel: 89 93 41
Telex: 12133

Institute of Medical Bionics
Vyskumny Ustav Lekarskej Bioniky
Jedlova 6
CS-88346 **Bratislava-Kramare**
Tel: 44-551
Telex: 93229

DENMARK
Hewlett-Packard A/S
Datavej 52
DK-3460 **Birkerod**
Tel: (02) 81 66 40
Telex: 37409 hpas dk

Hewlett-Packard A/S
Navervej 1
DK-8600 **Silkeborg**
Tel: (06) 82 71 66
Telex: 37409 hpas dk

ECUADOR
CYEDE Cia. Ltda.
P.O. Box 6423 CCI
Av. Eloy Alfaro 1749
Quito
Tel: 450-975, 243-052
Telex: 2548 CYEDE ED

Medical Only
Hospitalar S.A.
Casilla 3590
Robles 625
Quito
Tel: 545-250

EGYPT
I.E.A.
International Engineering Associates
24 Hussein Hegazi Street
Kasr-el-Aini
Cairo
Tel: 23 829
Telex: 93830

SAMITRO
Sami Amin Trading Office
18 Abdel Aziz Gawish
Abdine-Cairo
Tel: 24932

EL SALVADOR
IPESA
Bulevar de los Heroes 11-48
Edificio Sarah 1148
San Salvador
Tel: 252787

ETHIOPIA
Abdella Abdulmalik
P.O. Box 2635
Addis Ababa
Tel: 11 93 40

FINLAND
Hewlett-Packard Oy
Revontulentie, 7
SF-02100 **Espoo** 10
Tel: (90) 455 0211
Telex: 121563 hewpa sf

FRANCE
Hewlett-Packard France
Zone d'activites de Courtaboeuf
Avenue des Tropiques
Boite Postale 6
91401 **Orsay**-Cédex
Tel: (1) 907 78 25
TWX: 600048F

Hewlett-Packard France
Chemin des Mouilles
B.P. 162
69130 **Ecully**
Tel: (78) 33 81 25
TWX: 310617F

Hewlett-Packard France
20, Chemin de La Cépière
31081 **Toulouse**
Le Mirail-Cédex
Tel: (61) 40 11 12

Hewlett-Packard France
Le Ligoures
Place Romée de Villeneuve
13100 **Aix-en-Provence**
Tel: (42) 59 41 02
TWX: 410770F

Hewlett-Packard France
2, Allee de la Bourgonette
35100 **Rennes**
Tel: (99) 51 42 44
TWX: 740912F

Hewlett-Packard France
18, rue du Canal de la Marne
67300 **Schiltigheim**
Tel: (88) 83 08 10
TWX: 890141F

Hewlett-Packard France
Immeuble péricentre
rue van Gogh
59650 **Villeneuve** D'Ascq
Tel: (20) 91 41 25
TWX: 160124F

Hewlett-Packard France
Bâtiment Ampère
Rue de la Commune de Paris
B.P. 300
93153 **Le Blanc Mesnil**-Cédex
Tel: (01) 931 88 50
Telex: 211032F

Hewlett-Packard France
Av. du Pdt. Kennedy
33700 **Merignac**
Tel: (56) 97 01 81

Hewlett-Packard France
Immeuble Lorraine
Boulevard de France
91035 **Evry**-Cédex
Tel: 077 96 60
Telex: 692315F

Hewlett-Packard France
23 Rue Lothaire
57000 **Metz**
Tel: (87) 65 53 50

GERMAN FEDERAL REPUBLIC
Hewlett-Packard GmbH
Vertriebszentrale Frankfurt
Berner Strasse 117
Postfach 560 140
D-6000 **Frankfurt** 56
Tel: (06011) 50041
Telex: 04 13249 hpffm d

Hewlett-Packard GmbH
Technisches Büro Böblingen
Herrenberger Strasse 110
D-7030 **Böblingen,**
Württemberg
Tel: (07031) 667-1
Telex: 07265739 bbn

Hewlett-Packard GmbH
Technisches Büro Düsseldorf
Emanuel-Leutze-Str. 1 (Seestern)
D-4000 **Düsseldorf**
Tel: (0211) 5971-1
Telex: 085/86 533 hpdd d

Hewlett-Packard GmbH
Technisches Büro Hamburg
Kapstadtring 5
D-2000 **Hamburg** 60
Tel: (040) 63804-1
Telex: 21 63 032 hphh d

Hewlett-Packard GmbH
Technisches Büro Hannover
Am Grossmarkt 6
D-3000 **Hannover** 91
Tel: (0511) 46 60 01
Telex: 092 3259

Hewlett-Packard GmbH
Technisches Büro Nürnberg
Neumeyerstrasse 90
D-8500 **Nürnberg**
Tel: (0911) 52 20 83
Telex: 0623 860

Hewlett-Packard GmbH
Technisches Büro München
Eschenstrasse 5
D-8021 **Taufkirchen**
Tel: (089) 6117-1
Telex: 0524985

Hewlett-Packard GmbH
Technisches Büro Berlin
Kaithstrasse 2-4
D-1000 **Berlin** 30
Tel: (030) 24 90 86
Telex: 018 3405 hpbln d

GREECE
Kostas Karayannis
8 Omirou Street
Athens 133
Tel: 32 30 303/32/37 731
Telex: 21 59 62 RKAR GR

GUAM
Guam Medical Supply, Inc.
Suite C, Airport Plaza
P.O. Box 8947
Tamuning 96911
Tel: 646-4513

GUATEMALA
IPESA
Avenida Reforma 3-48
Zona 9
Guatemala City
Tel: 316627, 314786, 66471-5, ext. 9
Telex: 4192 Teletro Gu

HONG KONG
Hewlett-Packard Hong Kong Ltd.
11th Floor, Four Seas Bldg.
212 Nathan Rd.
Kowloon
Tel: 3-697446 (5 lines)
Telex: 36678 HX

Medical/Analytical Only
Schmidt & Co. (Hong Kong) Ltd.
Wing On Centre, 28th Floor
Connaught Road, C.
Hong Kong
Tel: 5-455644
Telex: 74766 SCHMX HX

INDIA
Blue Star Ltd.
Sahas
414/2 Vir Savarkar Marg
Prabhadevi
Bombay 400 025
Tel: 45 78 87
Telex: 011-4093

Blue Star Ltd.
Band Box House
Prabhadevi
Bombay 400 025
Tel: 45 73 01
Telex: 011-3751

Blue Star Ltd.
Bhavdeep
Stadium Road
Ahmedabad 380 014
Tel: 43922
Telex: 012-234

Blue Star Ltd.
7 Hare Street
Calcutta 700 001
Tel: 23-0131
Telex: 021-7655

Blue Star Ltd.
Bhandari House
91 Nehru Place
New Delhi 110 024
Tel: 682547
Telex: 031-2463

Blue Star Ltd.
T.C. 7/603 'Poornima'
Maruthankuzhi
Trivandrum 695 013
Tel: 65799
Telex: 0884-259

Blue Star Ltd.
11 Magarath Road
Bangalore 560 025
Tel: 55668
Telex: 0845-430

Blue Star Ltd.
Meeakshi Mandiram
XXXXV/1379-2 Mahatma Gandhi Rd.
Cochin 682 016
Tel: 32069
Telex: 085-514

Blue Star Ltd.
1-1-117/1 Sarojini Devi Road
Secunderabad 500 033
Tel: 70126
Telex: 0155-459

Blue Star Ltd.
133 Kodambakkam High Road
Madras 600 034
Tel: 82057
Telex: 041-379

ICELAND
Medical Only
Elding Trading Company Inc.
Hafnarnvoli - Tryggvagötu
P.O. Box 895
IS-**Reykjavik**
Tel: 1 58 20/1 63 03

INDONESIA
BERCA Indonesia P.T.
P.O. Box 496/Jkt.
Jln. Abdul Muis 62
Jakarta
Tel: 349255, 349886
Telex: 46748 BERSIL IA

BERCA Indonesia P.T.
P.O. Box 174/Sby.
23 Jln. Jimerto
Surabaya
Tel: 42027

IRELAND
Hewlett-Packard Ltd.
Kestrel House
Clanwilliam Place
Lower Mount Street
Dublin 2, Eire

Hewlett-Packard Ltd.
2C Avongberg Ind. Est.
Long Mile Road
Dublin 12
Tel: 514322/514224
Telex: 30439

Medical Only
Cardiac Services (Ireland) Ltd.
Kilmore Road
Artane
Dublin 5, Eire
Tel: (01) 315820

Medical Only
Cardiac Services Co.
95A Finaghy Rd. South
Belfast BT10 0BY
GB-Northern Ireland
Tel: (0232) 625566
Telex: 747626

ISRAEL
Electronics Engineering Div. of Motorola Israel Ltd.
16, Kremenetski Street
P.O. Box 25016
Tel-Aviv
Tel: 38973
Telex: 33569, 34164

ITALY
Hewlett-Packard Italiana S.p.A.
Via G. Di Vittorio, 9
20063 **Cernusco Sul Naviglio** (MI)
Tel: (2) 903691
Telex: 334632 HEWPACKIT

Hewlett-Packard Italiana S.p.A.
Via Turazza, 14
35100 **Padova**
Tel: (49) 664888
Telex: 430315 HEWPACKI

Hewlett-Packard Italiana S.p.A.
Via G. Armellini 10
1-00143 **Roma**
Tel: (06) 54 69 61
Telex: 610514

Hewlett-Packard Italiana S.p.A.
Corso Giovanni Lanza 94
I-10133 **Torino**
Tel: (011) 659308
Telex: 221079

Hewlett-Packard Italiana S.p.A.
Via Principe Nicola 43 G/C
I-95126 **Catania**
Tel: (095) 37 05 04
Telex: 970291

Hewlett-Packard Italiana S.p.A.
Via Nuova san Rocco A Capadimonte, 62A
80131 **Napoli**
Tel: (081) 710698

Hewlett-Packard Italiana S.p.A.
Via Martin Luther King, 38/111
I-40132 **Bologna**
Tel: (051) 402394
Telex: 511630

JAPAN
Yokogawa-Hewlett-Packard Ltd.
29-21, Takaido-Higashi 3-chome
Suginami-ku, **Tokyo** 168
Tel: 03-331-6111
Telex: 232-2024 YHP-Tokyo

Yokogawa-Hewlett-Packard Ltd.
Chuo Bldg., 4th Floor
4-20, Nishinakajima 5-chome
Yodogawa-ku, Osaka-shi
Osaka, 532
Tel: 06-304-6021
Telex: 523-3624

Yokogawa-Hewlett-Packard Ltd.
Sumitomo Seimei Nagaya Bldg.
11-2 Shimosasajima-cho,
Nakamura-ku, **Nagoya,** 450
Tel: 052 571-5171

Yokogawa-Hewlett-Packard Ltd.
Tanigawa Building
2-24-1 Tsuruya-cho
Kanagawa-ku
Yokohama, 221
Tel: 045-312-1252
Telex: 382-3204 YHP YOK

Yokogawa-Hewlett-Packard Ltd.
Mito Mitsui Building
105, 1-chome, San-no-maru
Mito, Ibaragi 310
Tel: 0292-25-7470

Yokogawa-Hewlett-Packard Ltd.
Inoue Building
1348-3, Asahi-cho, 1-chome
Atsugi, Kanagawa 243
Tel: 0462-24-0452

Yokogawa-Hewlett-Packard Ltd.
Kumagaya Asahi
Hachijuni Building
4th Floor
3-4, Tsukuba
Kumagaya, Saitama 360
Tel: 0485-24-6563

JORDAN
Mouasher Cousins Co.
P.O. Box 1387
Amman
Tel: 24907/39907
Telex: SABCO JO 1456

KENYA
ADCOM Ltd., Inc.
P.O. Box 30070
Nairobi
Tel: 331955
Telex: 22639

Medical Only
International Aeradio (E.A.) Ltd.
P.O. Box 19012
Nairobi Airport
Nairobi
Tel: 336055/56
Telex: 22201/22301

Medical Only
International Aeradio (E.A.) Ltd.
P.O. Box 95221
Mombasa

KOREA
Samsung Electronics Co., Ltd.
4759 Shingil-6-Dong
Yeong Deung POU
Seoul
Tel: 833-4122, 4121
Telex: SAMSAN 27364

KUWAIT
Al-Khaldiya Trading & Contracting
P.O. Box 830-Safat
Kuwait
Tel: 42 4910/41 1726
Telex: 2481 Areeg kt

LUXEMBURG
Hewlett-Packard Beneluz S.A./N.V.
Avenue du Col-Vert, 1 (Groenkraaglaan)
B-1170 **Brussels**
Tel: (02) 660 5050
Telex: 23 494

MALAYSIA
Hewlett-Packard Sales (Malaysia) Sdn. Bhd.
Suite 2.21/2.22
Bangunan Angkasa Raya
Jalan Ampang
Kuala Lumpur
Tel: 483680, 485653

Protel Engineering
P.O. Box 1917
Lot 259, Satok Road
Kuching, **Sarawak**
Tel: 53544

MEXICO
Hewlett-Packard Mexicana, S.A. de C.V.
Av. Periférico Sur No. 6501
Tepepan, Xochimilco
Mexico 23, D.F.
Tel: 905-676-4600
Telex: 017-74-507

Hewlett-Packard Mexicana, S.A. de C.V.
Rio Volga #600
Col. Del Valle
Monterrey, N.L.
Tel: 78-32-10

MOROCCO
Dolbeau
81 rue Karatchi
Casablanca
Tel: 3041 82
Telex: 23051/22822

Gerep
2, rue d'Agadir
Boite Postal 156
Casablanca
Tel: 272093/5
Telex: 23 739

MOZAMBIQUE
A.N. Goncalves, Ltd.
162, 1° Apt. 14 Av. D. Luis
Caixa Postal 107
Maputo
Tel: 27091, 27114
Telex: 6-203 NEGON Mo

NETHERLANDS
Hewlett-Packard Benelux N.V.
Van Heuven Goedhartlaan 121
P.O. Box 667
1181KK **Amstelveen**
Tel: (20) 47 20 21
Telex: 13 216

NEW ZEALAND
Hewlett-Packard (N.Z.) Ltd.
4-12 Cruickshank Street
Kilbirnie, Wellington 3
P.O. Box 9443
Courtney Place
Wellington
Tel: 877-199

Hewlett-Packard (N.Z.) Ltd.
P.O. Box 26-189
169 Manukau Road
Epsom, **Auckland**
Tel: 687-159

Analytical/Medical Only
Northrop Instruments & Systems Ltd.,
Sturdee House
85-87 Ghuznee Street
P.O. Box 2406
Wellington
Tel: 850-091
Telex: NZ 31291

Northrup Instruments & Systems Ltd.
Eden House, 44 Khyber Pass Rd.
P.O. Box 9682, Newmarket
Auckland 1
Tel: 794-091

Northrup Instruments & Systems Ltd.
Terrace House, 4 Oxford Terrace
P.O. Box 8388
Christchurch
Tel: 64-165

NIGERIA
The Electronics Instrumentations Ltd.
N6B/770 Oyo Road
Oluseun House
P.M.B. 5402
Ibadan
Tel: 461577
Telex: 31231 TEIL NG

The Electronics Instrumentations Ltd.
144 Agege Motor Road, Mushin
P.O. Box 481
Mushin, **Lagos**

NORWAY
Hewlett-Packard Norge A/S
Ostendalen 18
P.O. Box 34
1345 **Osteraas**
Tel: (02) 1711 80
Telex: 16621 hpnas n

Hewlett-Packard Norge A/S
Nygaardsgaten 114
P.O. Box 4210
5013 Nygaardsgaten,
Bergen
Tel: (05) 21 97 33

PANAMA
Electrónico Balboa, S.A.
Aparatado 4929
Panama 5
Calle Samuel Lewis
Edificio "Alfa," No. 2
Ciudad de Panama
Tel: 64-2700
Telex: 3483103 Curundu, Canal Zone

PERU
Compañía Electro Médica S.A.
Los Flamencos 145
San Isidro Casilla 1030
Lima 1
Tel: 41-4325
Telex: Pub. Booth 25424 SISIDRO

PAKISTAN
Mushko & Company Ltd.
Oosman Chambers
Abdullah Haroon Road
Karachi-3
Tel: 511027, 512927
Telex: 2894

Printed in U.S.A.